Jan. 19, 1926. 1,570,287

H. SELL

TELEPHONE

Filed Jan. 25, 1924

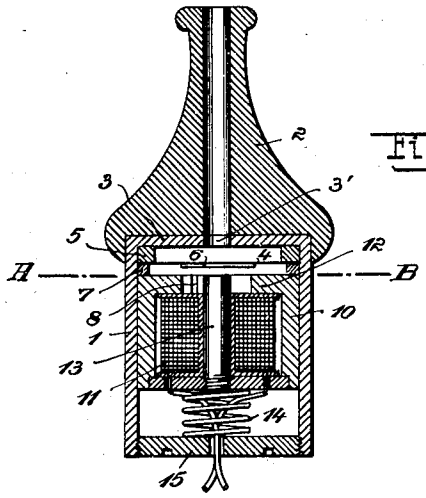

Fig. 1

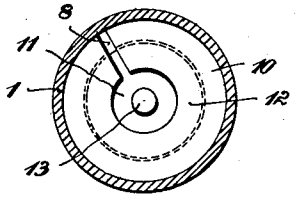

Fig. 2

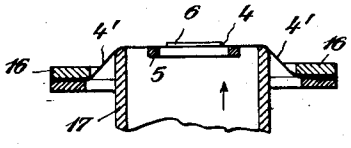

Fig. 3

Inventor
Helmut Sell
by Knight Bros
Attorneys

Patented Jan. 19, 1926. 1,570,287

UNITED STATES PATENT OFFICE.

HELMUT SELL, OF SIEMENSSTADT, NEAR BERLIN, GERMANY, ASSIGNOR TO SIEMENS & HALSKE, AKTIENGESELLSCHAFT, OF SIEMENSSTADT, NEAR BERLIN, GERMANY, A CORPORATION OF GERMANY.

TELEPHONE.

Application filed January 25, 1924. Serial No. 688,471.

To all whom it may concern:

Be it known that I, HELMUT SELL, a citizen of the German Empire, residing at Siemensstadt, near Berlin, Germany, have invented certain new and useful Improvements in Telephones, of which the following is a specification.

My invention relates to improvements in telephones, and more particularly to electric miniature telephones, such as are used by the deaf to improve or restore the natural hearing. In the case of telephone appliances which are of such small dimensions that they can be inserted into the ear opening, use has hitherto been made of diaphragms of animal skin or collodium with a small iron armature cemented to them. Such diaphragms have the inherent disadvantage that they are affected by fluctuations in the humidity and the temperature of the air, and that in consequence thereof they require special devices to re-adjust their tension.

As the diaphragms of ordinary telephones consist of magnetic material, it has been suggested to increase their sensitiveness by making them of very thin material. Such diaphragms however, have the defect that the magnetic mass does not suffice to transmit the energy from the magnetic system to the diaphragm. The arrangement of an iron armature upon the diaphragm as known in telephones for the deaf, has the drawback that the sound produced by the natural frequency of the diaphragm becomes very prominent, the free oscillations of the diaphragm being undamped and strong. Moreover, the natural frequency just referred to is so very low that it can be sufficiently raised only by an additional artificial tensioning of the diaphragm, whereby the elastic limit of the material may easily be exceeded. A further difficulty arises from the fact that a thin metal diaphragm is not sufficiently stiff to maintain the necessary short distance between the armature and the magnet system.

According to the present invention these drawbacks are removed by employing as diaphragm, an extremely thin metal plate, viz, a metal foil, the thickness of which is preferably only a few hundredths of a millimeter and by fixing such thin foil at its circumference in such a manner, that it is permanently maintained in a state of strong tension. The thickness of the armature which is fixed to this diaphragm along its surface, is a multiple of that of the diaphragm and its diameter is disproportionally large in comparison with the diameter of the diaphragm, so that the elastic portion of the entire diaphragm consists merely of a narrow ring.

Owing to the thinness of the diaphragm it is possible to obtain, in spite of the comparatively large central mass, a frequency range covering the ordinary speech frequencies, while the tension of the diaphragm remains far below the elastic limit of the material of which the diaphragm is made. Owing to the large surface of the armature a very strong magnetic damping is obtained, and inasmuch as only a narrow zone is concerned in the elastic oscillations and the central portion of the diaphragm remains rigid, a subdivision of the diaphragm by different oscillations of the parts of the diaphragm are excluded. The improved diaphragm possesses great stiffness, so that the distance of the armature attached thereto from the part co-operating therewith, may be reduced to a very small value, e. g. to a few hundredths of a millimeter. This feature is especially favorable in the case of magnetic actions.

One mode of carrying the invention into effect is illustrated by way of example in the accompanying drawings, in which

Figure 1 is a longitudinal section of a telephone for the deaf, on an enlarged scale.

Figure 2 a cross section along the line A—B in Figure 1, and

Figure 3 a method of manufacturing the improved diaphragm, the various parts being shown on a smaller scale.

Referring to the drawings, 1 is a cylindrical casing in which the telephone is housed, and 2 a conical extension of vulcanite or the like by means of which the telephone is introduced into the passage of the ear. Within the casing 1, which is made of soft iron and closed with the exception of the opening 3′ for the transmission of the sound waves, a diaphragm carrier 5 is mounted adjacent to the end well 3 of the casing. The carrier 5 consists of a ring onto which the diaphragm is soldered in such a manner that it is permanently maintained in a state of strong tension. The diaphragm

4 may be made of phosphor-bronze, German-silver, nickel or any other metallic material the natural resiliency of which is high. The thickness of the diaphragm is a few hundredths of a millimeter, for example 0.05 mm. or less. Upon this diaphragm is soldered an iron armature 6 the thickness of which is about thirty times the thickness of the foil constituting the diaphragm. A distance ring 7 fitting the interior wall of the casing 1 is mounted on the carrier 5 and is held in position by the magnet 10, which is pot-shaped, its winding 11 being housed in its interior. The casing being made of soft iron a very good and constant magnetic effect with respect to telephones of the type described is guaranteed.

The outer magnet pole 12 lies so close to the inner rod-like pole 13, that the air gap to be bridged by the armature 6 is comparatively narrow. The magnet 10 which is provided at one side with a slot 8 in order to avoid short circuit currents, is pressed against the rings 7 and 5 by a spring 14, the other end of which abuts against the cover 15 of the casing 1, whereby the diaphragm 4 and the distance ring 7 are secured in position by the forcing of the magnet 10 away from the cover.

The necessary tension or stretching of the diaphragm 4 is effected by fixing it in a suitably stretched condition upon the carrier ring 5. Fig. 3 illustrates on an enlarged scale a device for manufacturing such a diaphragm under tension. A metal foil 4′ is first clamped around its circumference in an annular holder 16 and is then forced outwards in the direction of the arrow by a hollow cylinder 17, to such an extent that the desired tension is set up. Upon one side of the dished portion 4 of the foil 4′ is then soldered the carrier ring 5 and upon the other side thereof the iron armature 6. The soldering is effected by a fluid solder and in any case by a solder fusible at low temperatures, so that the resilient properties of the foil shall not be affected by heating. After the carrier ring 5 has been firmly secured to the foil forming the diaphragm 4 the latter is cut out of the foil 4′ around the circumference of the ring 5. The diaphragm thus obtained is ready for insertion into the telephone.

What I claim as my invention and desire to secure by Letters Patent is:—

1. A diaphragm unit for telephones of the character described, said unit comprising a diaphragm proper consisting of very thin metal foil radially tensioned, an iron plate armature fixed throughout its entire surface to said diaphragm, and means fixed to the periphery of said diaphragm for maintaining it in permanently tensioned condition.

2. A diaphragm unit for telephones of the character described, said unit comprising a diaphragm proper consisting of very thin metal foil radially tensioned, an iron plate armature fixed throughout its entire surface to said diaphragm and covering the major central portion thereof, and means fixed to the periphery of said diaphragm for maintaining it in permanently tensioned condition, the annular diaphragm portion surrounding said armature constituting the resilient portion of the diaphragm.

3. A diaphragm unit of the character described, said unit comprising the diaphragm proper consisting of phosphor bronze metal foil not exceeding 0.05 mm. in thickness, said diaphragm being radially stretched to give it the desired tension, an iron plate armature fixed throughout its entire surface to said diaphragm and covering the major central portion thereof, and means fixed to the periphery of said diaphragm for maintaining it in permanently tensioned condition, the annular diaphragm portion surrounding said armature constituting the resilient portion of the diaphragm.

4. A diaphragm unit for telephones of the character described, said unit comprising a diaphragm proper consisting of very thin metal foil radially tensioned, an iron plate armature fixed throughout its entire surface to said diaphragm, and means fixed to the periphery of said diaphragm for maintaining it in permanently tensioned condition, said maintaining means forming the carrier for said diaphragm.

5. A diaphragm unit for telephones of the character described, said unit comprising a diaphragm proper consisting of very thin metal foil radially tensioned, an iron plate armature fixed throughout its entire surface to said diaphragm and covering the major central portion thereof, and means fixed to the periphery of said diaphragm for maintaining it in permanently tensioned condition, the annular diaphragm portion surrounding said armature constituting the resilient portion of the diaphragm, said maintaining means forming the carrier for said diaphragm.

6. In a telephone of the character described, the combination with a casing and a pot shaped magnet contained therein, of a diaphragm consisting of very thin metal foil, a carrier removably mounted in said casing and having said diaphragm at its periphery fixed to it in stretched condition and adapted to maintain this condition of the diaphragm, and an iron plate armature fixed throughout its entire surface to said diaphragm.

7. In a telephone of the character described, the combination of a cylindrical telephone casing, a pot shaped magnet disposed therein and having an annular outer

pole and a central pole spaced apart from the outer pole by a small air gap, a diaphragm of very thin metal foil, an iron plate fixed throughout its entire surface to said diaphragm and constituting the armature for said magnet, an independent carrier ring having said diaphragm at its periphery fixed to it under strong tension and adapted to maintain said diaphragm tension, a spacing ring interposed between said carrier and said magnet, and a spring for pressing said magnet, said spacing ring and said carrier together.

8. In a telephone of the character described, a diaphragm consisting of very thin metal foil, an iron plate armature fixed thereto and a carrier ring rigidly attached to the periphery of said diaphragm under strong tension of the latter.

9. The method of producing a tensioned telephone diaphragm unit of the character described, consisting in first securing metal foil at its circumference to a holder without appreciable tension, then dishing the central portion of the foil by forcing a ring against the foil to put this portion under tension, then soldering a carrier ring and an armature to said central portion while under tension and then cutting away the foil extending beyond the periphery of said carrier ring.

In testimony whereof I affix my signature.

HELMUT SELL.