United States Patent [19]

Cutler

[11] **3,807,886**

[45] **Apr. 30, 1974**

[54] **METHOD FOR HEATING ASPHALT CONCRETE ROADWAYS AND THE LIKE**

[75] Inventor: **Earl F. Cutler,** Lawrence, Kans.

[73] Assignee: **Cutler Repaving Associates, Incorporated,** Lawrence, Kans.

[22] Filed: **Aug. 16, 1972**

[21] Appl. No.: **282,004**

Related U.S. Application Data

[63] Continuation-in-part of Ser. No. 129,404, March 30, 1971, Pat. No. 3,724,445.

[52] **U.S. Cl.** **404/77**

[51] **Int. Cl.** **E01c 7/06**

[58] **Field of Search** 404/77, 79, 95; 126/271.1, 126/271.2, 271.3

[56] **References Cited**

UNITED STATES PATENTS

1,984,849	12/1934	Van Allen	404/95 X
3,055,280	9/1962	Neville	126/271.2 A
1,733,841	10/1929	Vincent	404/95
2,274,517	2/1942	Ashmore	404/95 X
2,273,254	2/1942	Davis	404/95 X
2,048,813	7/1936	Porterfield	404/95
1,952,452	3/1934	Monroe	404/95
2,705,906	4/1955	Fizzell	404/95
3,132,642	5/1964	Fingland	126/271.2 A
3,311,104	3/1967	Wollner	126/271.2 A X
3,096,696	7/1963	Reisser	126/271.2 A X

Primary Examiner—Nile C. Byers, Jr.

Attorney, Agent, or Firm—Olson, Trexler, Wolters, Bushnell & Fosse, Ltd.

[57] **ABSTRACT**

Disclosed herein is a method for heating asphalt concrete roadways during paving and/or repaving thereof. The road surface is heated by directing a flame across a radiant heating element which is to be heated. Heating of the road surface is accomplished by radiant heat of red and infra-red heat energy, and such radiant heat will penetrate the road surface to a depth of one inch or more whereupon the heated and softened asphalt together with portions thereof beneath the heated portion are excavated to be reworked and again deposited as a new road surface. The addition of extra new quantities of asphalt material can be introduced if desired.

6 Claims, 7 Drawing Figures

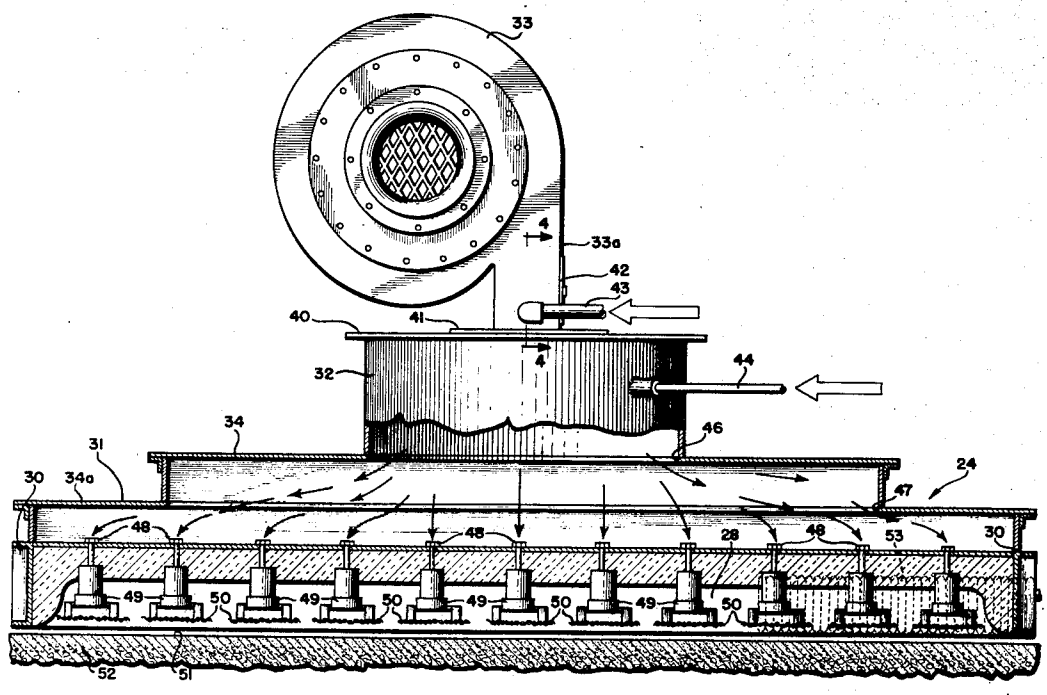

FIG.1

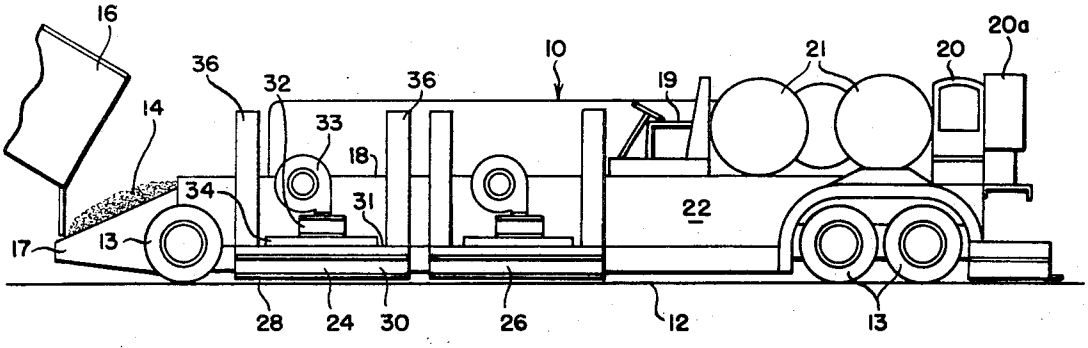
16
36
32
36
10
19
21
20
20a
14
33
18
34
31
22
17
13
28
24
30
26
12
13

FIG.2

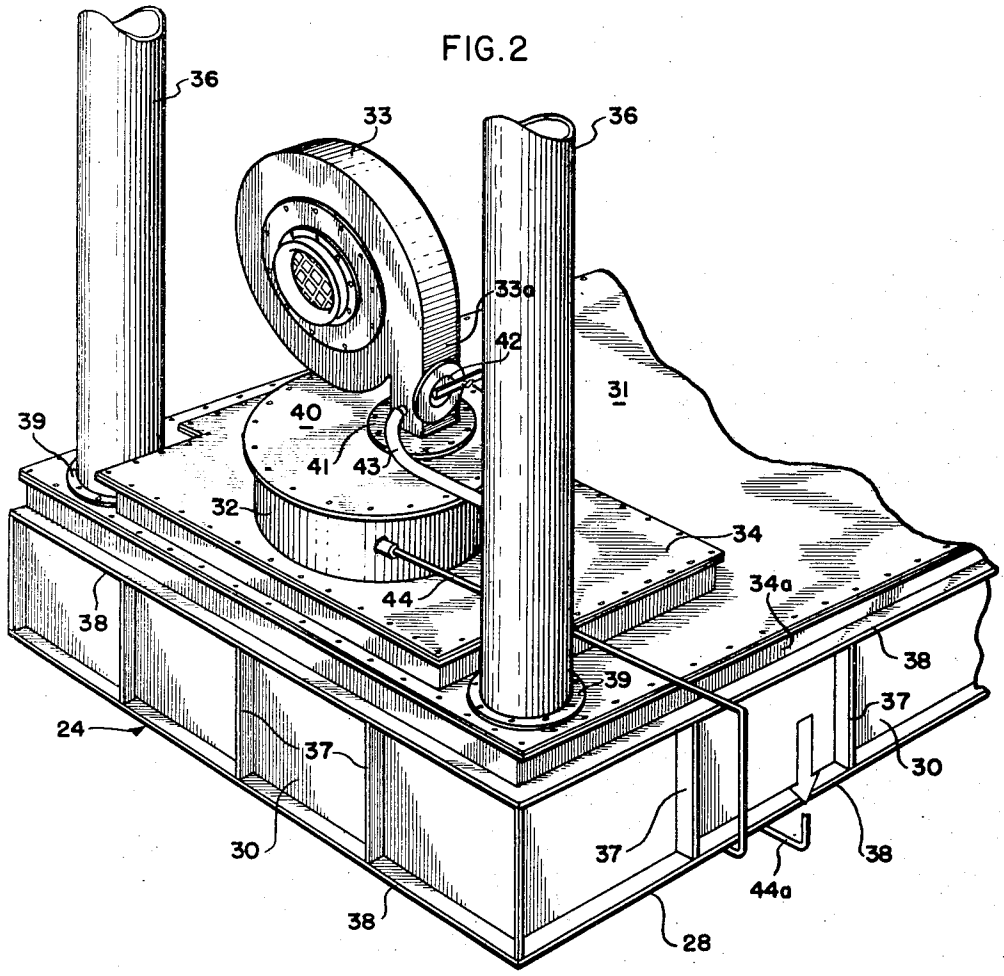
36
33
36
33a
42
31
39
40
41
43
32
34
34a
44
38
38
39
37
24
37
30
30
37
38
44a
38
28

42
43
56
57
61
62
59
58
60

FIG. 4

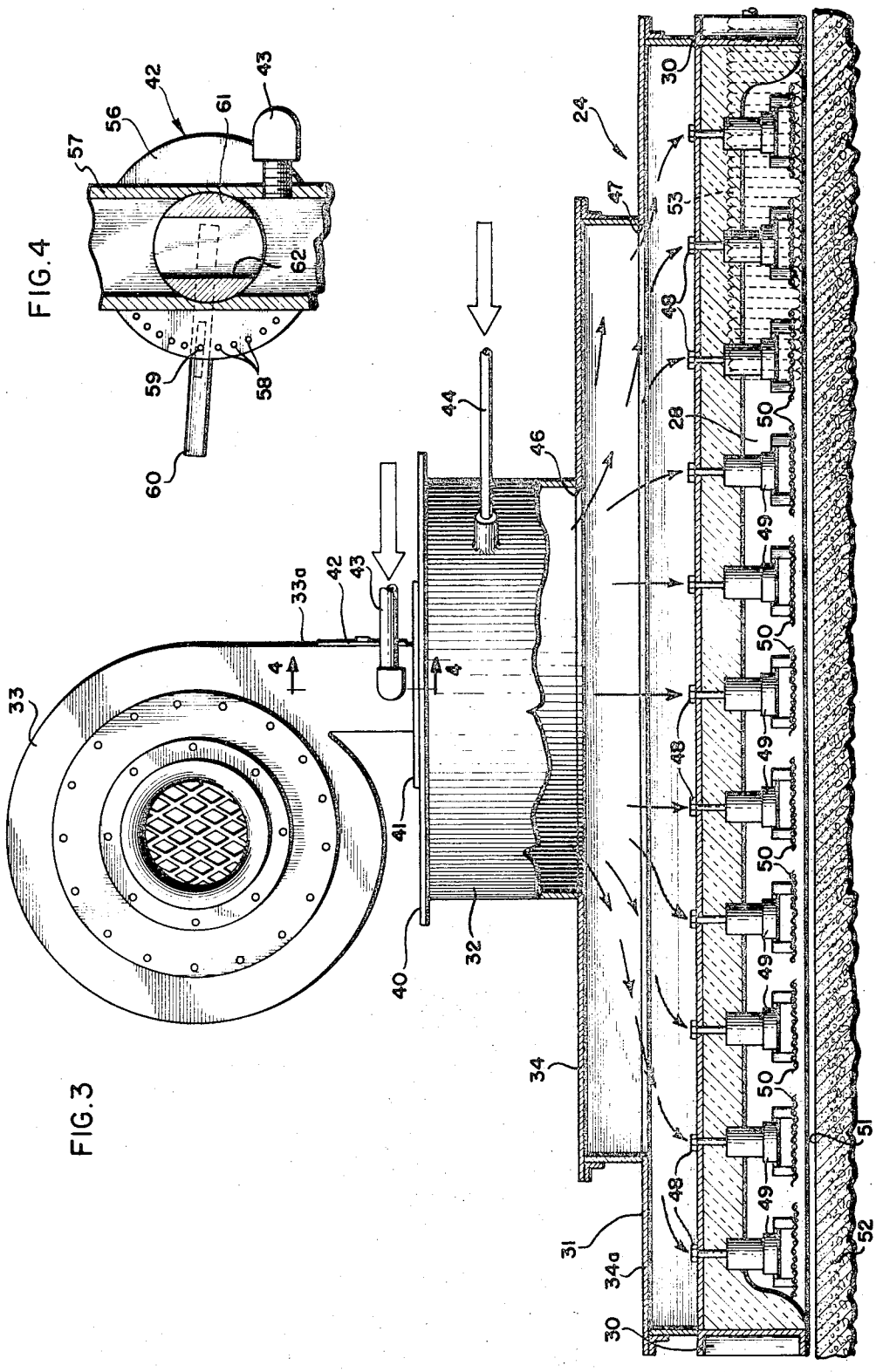
33
33a
42
43
4
4
41
40
32
44
46
24
47
53
48
28
50
49
34
31
34a
30
51
52

FIG. 3

FIG. 5

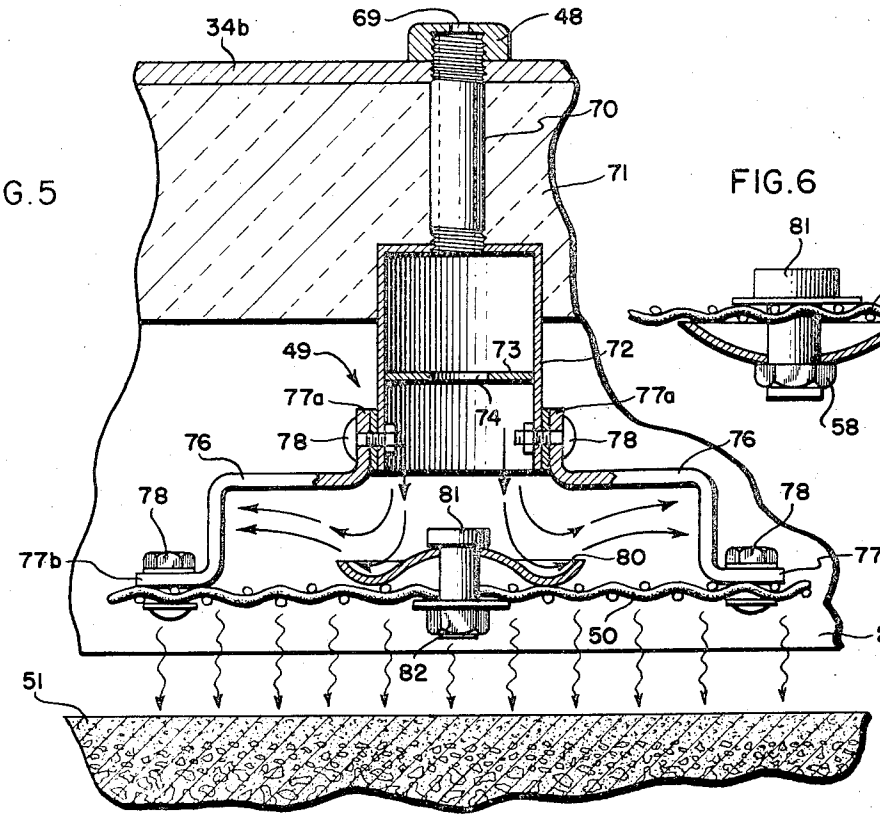

FIG. 6

FIG. 7

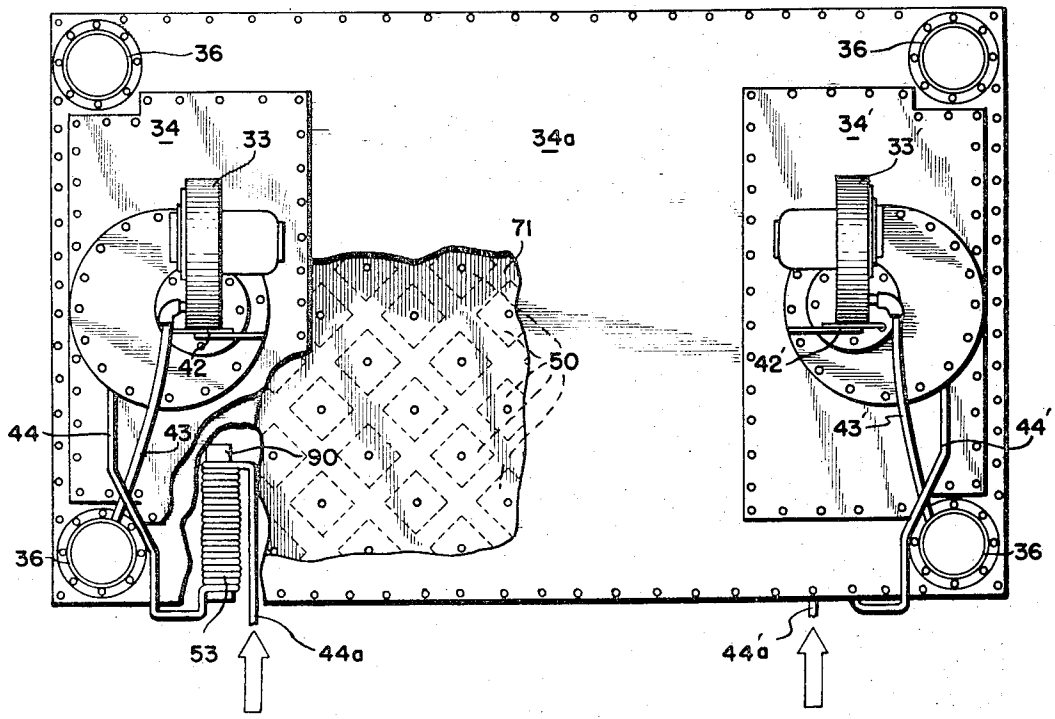

METHOD FOR HEATING ASPHALT CONCRETE ROADWAYS AND THE LIKE

REFERENCE TO RELATED APPLICATIONS

This is a continuation-in-part of my earlier filed copending application Ser. No. 129,404, filed Mar. 30, 1971, now U.S. Pat. No. 3,724,445.

BACKGROUND OF THE INVENTION

This invention relates generally to resurfacing of roadways, and more particularly to a method of heating the roadway at several work stations in a resurfacing machine.

This invention deals with substantial improvements in my earlier filed copending application Ser. No. 129,404 filed Mar. 30, 1971, and the entire subject matter of this earlier application is included herein by reference. Road surfacing apparatus as set forth in my U.S. Pat. No. 3,361,042 provides means for quickly and inexpensively resurfacing roadways made of asphalt concrete materials or the like. The apparatus may be 8 to 12 feet wide and 40 to 50 feet long and move along the roadway at a relatively slow speed so that during the single continuous pass over the pavement the old road surface in front of the machine is excavated and converted to a refinished road surface at the rear of the machine. A distinct advantage of repaving roadways with this type of machinery is that the finished repaved strip of roadway is immediately available for vehicular traffic within a matter of minutes after completion.

The road repaving machinery, in which the method of this invention is utilized, performs the following functions during the repaving process. First, the road surface is heated so that heat penetration is obtained to a depth of one inch or more below the surface of the roadway. This is followed by scarifying deeply to excavate and disarrange the material heated by the first step. Then piling the disarranged material for maximum surface exposure so it can be further heated, this second heating step being substantially the same as in the first instance. Minor amounts of conventional tack coat to help weld the total hot top mixture to the substraight from which the heated material was removed can be added. This is followed by tamping and screening which, in turn, is followed by compacting as by conventional rolling means.

Heretofore, heating of the roadway surface was accomplished by a flame and partial radiant heat which produced a nonoxidizing atmosphere so that the temperature of the road surface could be elevated higher than the material could experience in air without being set on fire. This high temperature was needed for maximum heat penetration of the road surface. However, to achieve high temperature and penetration of the road surface, the amount of fuel used for both open flame and radiant heat is substantial.

SUMMARY OF THE INVENTION

Accordingly, it is an object of this invention to provide a method of heating a road surface wherein the type of heat impinged upon the road surface is substantially radiant heat so that maximum heat penetration is obtained.

Briefly, the method of this invention utilizes a heating apparatus in the form of two or more work stations carried by a repaving machine. The heating apparatus is provided with a fuel receiving manifold which is positioned over a heating chamber and is rectangular in configuration similar to that of the heating chamber. A plurality of discrete fuel burning elements have conduit portions extending through the heating chamber and into the manifold chamber to receive a mixture of hot gas and air which is a combustible mixture that is burned at the heating nozzle. To achieve the proper pressure and flow of fuel-air mixture, a variable quantity air blower is in fluid communication with the manifold chamber so that delivery of the air-fuel mixture to the nozzle is achieved under controlled velocity conditions. Furthermore, the fuel is preheated to a relatively high temperature before combustion at the nozzle to minimize rapid expansion of the gases during the combustion process. Therefore, the pressure within the heating chamber can be maintained substantially equal to that of the atmospheric pressure outside the chamber and little or no heat will escape from under the side walls thereof. Also, by maintaining the pressure within the heating chamber substantially equal to the atmospheric pressure minimum or no air is drawn into the heating chamber from under the side walls and oxidization or actual combustion of the road surface is prevented.

In accordance with the principles of this invention the flame from the heating apparatus is directed downwardly and then deflected laterally or radially outwardly so as to fall across substantially the entire area of a radiant heating element which converts the heat from the flame to radiant heat. The radiant heating element is positioned adjacent the road surface and thereby provides red and infra-red heat energy to penetrate the road surface to depths to 1 inch or more, this being accomplished in a relatively short period of time and with minimum use of fuel. The radiant heating element is preferably a nickel-base heat and oxidation-resistant material such as INCONEL but may be made from any suitable material.

Many other objects, features and advantages of this invention will be more fully realized and understood from the following detailed description when taken in conjunction with the accompanying drawings wherein like reference numerals throughout the various views of the drawings are intended to designate similar elements or components.

BRIEF DESCRIPTION OF THE DRAWINGS

FIG. 1 is a side elevational view of a roadbed resurfacing apparatus utilizing the heater structure which operates in accordance with the method of this invention;

FIG. 2 is a perspective fragmentary view of a heater structure which is used to perform the method of this invention;

FIG. 3 is a side elevational sectional view of the heater structure apparatus of FIG. 2;

FIG. 4 illustrates an air control mechanism for controlling the volume of air delivered to an air fuel mixing chamber of the heater structure;

FIG. 5 is an enlarged fragmentary view showing a discrete heater unit mounted within the heater structure;

FIG. 6 shows an alternate flame deflector arrangement which can be used in the heater unit of FIG. 5; and

FIG. 7 is a top view of the heater arrangement of FIG. 3 showing the placement of the discrete heater units and the associated radiant heating elements together with the air blower and manifold structure positioned above the heater chamber.

DETAILED DESCRIPTION OF THE ILLUSTRATED EMBODIMENT

For a better understanding of the method of this invention the apparatus used to carry it out will be first described in detail. Referring to FIG. 1 there is seen a side view of a road resurfacing equipment and is designated generally by reference numeral **10.** The road resurfacing equipment **10** utilizes a plurality of large pneumatic wheels **13** having sufficient contact surface area so that the weight of the machine is distributed uniformly. As the road resurfacing equipment **10** moves forward over a damaged road surface, the front end of the machine will heat and dig up the road surface to a depth of approximately 1 to 2 inches more or less. The quantity of old road surface now forming loose pavement is additionally heated so that it becomes substantially compressible under the weight of roller action. Additional quantities of asphalt material may be supplied, as desired, to build up the road surface to the previous height or to a height greater than the old road surface. The rate of travel of the machine may be in the order of 8 to 25 feet per minute thereby providing a completely reconstructed raod surface upon which vehicular traffic can commence substantially immediately after the new road surface has been formed.

A quantity of new material **14** is delivered via a truck **16** into a hopper or receptacle **17** at the front end of the machine. A conveyor **18** along the top portion of the frame transports the new material from the hopper to one or more various work stations. A control station **19** is located intermediate the machine and an operator is stationed there to control the direction of travel as well as the rate of travel of the machine. Also, the operator at the control station **19** controls various functions such as the amount of heat supplied to the road surface by the various burners. One or more diesel engines **20** are mounted at the rear portion of the machine and include various control panels **20*a*** which operate hydraulic pumps or compressors. The wheels **13** are motorized by independent hydraulic motors operated by a hydraulic hydrostatic supply pump control mechanism which may be driven from the engines **20.** A plurality of fuel tanks **21** are mounted on top of the support frame **22** of the machine and are used to carry fuel supplies for both the diesel engine **20** and for the burners **24** and **26.** One or more of the fuel tanks **21** may be filled with diesel fuel while one or more of the fuel tanks may be filled with pentane fuel for operating the burners. The pair of road surface heaters **24** and **26** are spaced sufficiently apart so that the heated road surface can be dug up and rearranged for additional heating of the dislodged components of the road. The manner in which the road resurfacing apparatus **10** operates is more fully discussed in my U.S. Pat. No. 3,361,042 and no further detailed description of operation is deemed necessary herein.

The road resurfacing apparatus **10** includes a pair of heaters **24** and **26** each constructed substantially in the same manner and therefore only a single heater will be discussed in detail. The heater **24** includes a heat chamber **28** facing downwardly to be positioned immediately over the road surface to be repaved so that the road surface can be heated to a depth of approximately one inch or more thereby softening the material forming the old road surface. After heating of the road surface it is excavated by scarifying or the like with a plurality of cutting points or knives and additional heat is supplied by the second burner **26.**

The heating chamber **28** is formed by a plurality of chamber-forming walls **30** of fabricated construction and a top wall or roof **31.** The bottom of the chamber is open and the downwardly extending peripheral edge portions of the side walls are closely spaced to the road surface so that minimum air gap is obtained. The pressure within the heating chamber **28** is maintained substantially equal to the atmospheric pressure outside of the chamber so that no heat escapes from the space between the walls and the road surface, and similarly, no unwanted oxidizing air will be drawn into the heating chamber from the outside atmosphere.

Positioned above the heating chamber **28** is a fuel mixing chamber **32** which, in turn, is in fluid communication with a pressure blower unit **33.** The pressure blower unit **33** supplies a quantity of air, under slight pressure so that the air fuel mixture is directed toward a plurality of burners within the heating chamber **28.** While the pressure provided by the blower **33** is relatively low, the air volume moved by the blower is maintained relatively high for maximum heating of the burners. The air fuel mixture supplied from the fuel mixing chamber **32** is then directed into a distributing manifold **34** mounted on top of the heating chamber **28.** The air fuel manifold **34** preferably takes the form of a rectangular chamber having a common wall between the heating chamber and the manifold A plurality of upwardly extending large diameter exhaust stacks **36** are located at each of the four corners of the burner so that heat formed within the heating chamber **28** can rise through the exhaust stacks and be expelled at a level substantially above street level so that workmen about the machine are not subjected to the extreme heat.

Referring now to FIG. 2 a detailed fragmentary perspective view of the heater **24** is illustrated, it being understood that the side of the heater **24** is typical with respect to the other side of the heater. The side walls **30** include a plurality of reinforcing members **37** positioned vertically about the side walls. A top and bottom edge **38** also form reinforcing members about the side walls. The manifold **34** is in fluid communication with an enlarged manifold portion **34*a*** which forms the top wall of the heating chamber. The manifold portion **34*a*** can be formed either as an integral part of the heating chamber as shown, i.e., formed by the top wall thereof, or it can be formed as a separate unit mounted on top of the heating chamber. The fuel mixing chamber **32** includes a top **40** which has a flange **41** fastened thereto for supporting the blower **33.** The blower **33** has the output portion thereof **33a** in direct fluid communication with a manually adjustable flow control valve **42.** The flow control valve **42** is adjustable to select the proper volume of air directed to the manifold **34.**

To insure that the air fuel mixture directed to the burners within the heat chamber **28** is expanded to the maximum extent, an air heat pipe **43** is in fluid communication between one of the exhaust stacks **36** and the outlet port **33a** of the blower **33.** In the illustrated em-

bodiment the connection to the outlet 33a is made below the flow control valve 42, it being understood that this hot air connection can be made above the flow control valve, if desired. A fuel line 44 is connected to the fuel mixing chamber 32 and therein the fuel, preferably pentane or the like, is admixed with the air from the blower 33 and delivered to the first manifold portion 34 and therefrom to the second manifold 34*a*. The fuel delivered through the line 44 is heated by a preheater unit, to be described hereinbelow, which is mounted within the heating chamber 28. Therefore, fuel from the tanks 21 is supplied to the inlet line 44*a* and directed through the preheater unit and therefrom to the fuel line 44 and into the mixing chamber 32. By so preheating the fuel and heating a portion of the air supplied to the mixing chamber, maximum expansion of the air fuel mixture is obtained before combustion. This enables the air fuel mixture to ignite with minimum expansion of gases so that little or no pressure is obtained within the heating chamber.

Referring now to FIG. 3 there is seen a side elevational sectional view showing more clearly the details of construction of the burner of this invention. Here it can be seen that the mixing chamber 32 is in open communication with the manifold 34 by means of a large opening 46 through the top wall of the manifold. However, it will be understood that the top wall of the manifold can be provided with a plurality of small holes rather than the large opening 46. Similarly, the top wall of the manifold portion 34*a* is provided with an opening 47 to receive the quantity of air fuel mixture from the manifold 34. Similarly, this large opening 47 can be replaced by a top wall portion having a plurality of small holes formed therein. The air fuel mixture from the chamber 32 is illustrated by the plurality of arrowed lines directed through the manifold.

The bottom wall of the manifold portion 34*a* is provided with a plurality of threaded members 38, they being nutlike units or the like secured, as for example. by welding to the inner wall portion of the manifold. The threaded units 48 receive burner units 49 therein, the burners being directed downwardly toward a radial heating element 50 and a flame deflector 80. Each of the burner units 49 includes the radiant heating element 50 upon which the open flame of the burner is impinged so that the flame heat produced by the burner is converted to radiant heat. The radiant heating elements 50 cause the pavement to be heated to a depth of approximately 1 inch or more, this being indicated by the portion 52 of the pavement shown in FIG. 3. Preferably, the radiant heating elements 50 are formed of screen-like members of Inconel material which is a nickel-based, heat-and-oxidation-resistant material having approximately 13 percent chromium, 6 percent iron and small amounts of manganese, silicon and copper. It will be understood that other similar radiant heating material may be utilized if desired.

Also mounted within the heating chamber 28 is a preheater unit 53 which, as mentioned above, has a fuel input line 44*a* connected to one portion thereof and the fuel output line 44 connected to the fuel mixing chamber 32. The preheater unit 53 substantially increases the temperature of the fuel before it is delivered to the mixer chamber 32 so that maximum expansion of the fuel is obtained before combustion thereof.

Referring now to FIG. 4 there is seen a detailed sectional view of the air flow control valve 42 which is connected in the output portion 33*a* of the blower 33. The air flow control valve 42 includes a fixed flange portion 56 formed on the rectangular conduit section 57. A plurality of holes 58 are formed near the periphery of a portion of the flange 56 to receive a pin 59 secured to an extended handle portion 60. The handle is used to rotate a vein element 61 so that a port 62 therethrough is positioned either in line or transverse to the flow path through the conduit section 57. The hot air inlet 43 is positioned below the adjustable vein 61 and admits a quantity of heated exhaust air from one of the vertical exhaust stacks 36, FIG. 2. While a cross vein type of air flow control device is shown herein, it will be understood that any suitable air flow control mechanism can be used in its place.

Referring now to FIG. 5 there is seen an elevational sectional view of one of the burner units 49 which is mounted within the heating chamber 28. Here it can be seen that the threaded fastener 48 has a metering orifice 69 substantially in alignment with the opening through a pipe 70. Air fuel mixture within the manifold 34*a* is delivered through the metering orifice 69 and the pipe 70 to an enlarged chamber portion of a cylinder 72. Within the cylinder 72 is mounted a baffle element 73 which has an enlarged aperture 74 centrally thereof. The baffle 73 serves further to agitate and mix the air fuel mixture before it is delivered to the lower burning portion of the cylinder 72 where the air fuel mixture is ignited. Secured to the bottom peripheral portion of the cylinder 72 are a plurality of support plates 76 having upwardly turned end portions 77*a* and radially outwardly turned portions 77*b* for securing to the cylinder and radiant heating element 50, respectively. The support legs 76 are secured by nut and bolt fasteners 78, which may include suitable washer elements as desired. The flame from the cylinder 72 is directed toward a deflector element 80 which has a curved surface exposed to the flame so that the flame is directed radially outwardly across the resultant heating element 50 to more efficiently heat the same. The deflector element 80 is mounted to the screen by means of a bolt 81 and nut 82.

The deflector element 80 may take several different configurations to cause the flame to be directed radially outwardly over the screen element. For example, FIG. 6 shows an alternate form of a detector element which is designated generally by reference numeral 80*a*. The deflector element 80*a*, in this instance, is mounted below the radiant heating element 50 so that the aperture thereof is in close proximity to the nut 82 rather than the head of the bolt 81.

FIG. 7 illustrates the orientation of the various radiant heating elements 50, they being substantially square in configuration and arranged diagonally within the heating chamber 28, this being shown in the broken away portion of the drawing of FIG. 7. This type of configuration insures that maximum radiant heating is directed toward the pavement beneath the same. Also shown in FIG. 7 is the detail of the preheater unit 53, it being formed of a plurality of windings of tubular material which supplies the fuel to the mixing chamber 32. The coils of the tubular material may be wrapped about a ceramic support member 90 which, in turn, is bolted in place under the heating chamber. FIG. 7 also shows that one heating element may be provided with a pair of manifold sections 34 and blowers 33. The second

manifold and blower element units are designated with a prime (') adjacent each of the numbers.

The method of this invention is carried out by the apparatus described hereinabove to more efficiently heat the road surface over which the road resurfacing machine travels. Mixing air and fuel into the right combustible quantities takes place within the mixing chamber **32**. The burning of the fuel occurs at the burners **49** after the fuel is delivered thereto through the appropriate manifold path. The flame is directed toward the road surface and then redirected radially outwardly over a radiant heating element positioned immediately beneath the nozzle of the burner. The heating of the road surface is accomplished substantially primarily by radiant heating in the wavelength range beginning in the middle of the visible spectrum and extending to both sides of the lower limit of visibility. The volume of air supplying the burners can be adjusted by varying the valve mechanism **42** and fuel preheating is obtained by the coil of tubular material **53** positioned within the heating chamber. The flame from the fuel burners is redirected so as not to unduly blanket the radiant heat from the radiant heating elements nor from the top wall of the heating chamber. Also, the volume of fuel air mixture is controlled so as to maintain a blanket of radiant heat within the chamber and which radiant heat is not insulated by an open flame.

The radiant heating element used in accordance with the principles of this invention can be mounted to a small tractor or the like for transporting the heating unit over a road surface so that spot repair work can be accomplished.

It will be understood that other structural configurations can be incorporated when carrying out the method of this invention. Therefore, variations and modifications may be effected without departing from the spirit and scope of the novel concepts as defined by the appended claims.

The invention is claimed as follows:

1. A method of heating a portion of a roadway comprising the steps of; mixing air and fuel into a combustible mixture, delivering the air and fuel mixture to a plurality of burner nozzles, burning the fuel within said nozzles, directing the flame from the nozzles toward the surface of the roadway to be heated, redirecting the flame radially outwardly from each nozzle so as to form a continuous wall of flame above the roadway to be heated, said redirected flame passing above radiant heater elements and heating the same, generating radiant heat from said radiant heater elements for heating the roadway therebeneath with substantially entirely intense radiation in the wavelength range beginning in the middle of the visible spectrum and extending to both sides of the lower limit of visibility and exhausting the products of combustion produced by said flame from a position above said radiant heater elements.

2. The method of heating a portion of a roadway according to claim **1** further including the step of adjusting the air supply delivered to the air fuel mixture so that the combustible mixture is delivered to the nozzles at a rate to minimize pressure within a heating chamber containing the nozzles.

3. The method of heating a portion of a roadway according to claim **1** further including the step of preheating the fuel before it is mixed with air and delivered to the nozzles, said preheating substantially expanding the fuel to minimize rapid expansion of the fuel upon combustion at said nozzles.

4. The method of heating a portion of a roadway according to claim **1** further including deflecting the flame from the nozzles immediately above said radiant heating element associated therewith, said deflecting of the flame causing turbulence and upwardly turning vortex movement of the flame above the radiant heating element means such that no open flame impinges upon the road surface being heated.

5. The method of heating a portion of a roadway according to claim **1** wherein the step of heating the roadway is accomplished for a period of time under radiant heat sufficient to cause heat penetration to 1 inch or more beneath the surface of the roadway.

6. A method of heating a portion of a roadway comprising the steps of directing a flame above a roadway in close proximity thereto, activating a radiant heating element with said flame and heating the roadway by radiant from said element, and guiding said flames out of direct impingement against the roadway and away from between the radiant heating element and the roadway to avoid interference with said radiation, by exhausting the products of combustion from a position above said radiant heater element.

* * * * *

UNITED STATES PATENT OFFICE
CERTIFICATE OF CORRECTION

Patent No. 3,807,886 Dated April 30, 1974

Inventor(s) EARL F. CUTLER

It is certified that error appears in the above-identified patent and that said Letters Patent are hereby corrected as shown below:

Col. 6, line 33, before "portions" insert ---bottom---
Col. 6, line 40, change "resultant" to ---radiant---
Col. 6, line 47, change "detector" to ---deflector---
Col. 8, line 39-40, change "ra-diant" to ---radiation---
Col. 8, line 40, change "flames" to ---flame---

Signed and sealed this 1st day of October 1974.

(SEAL)
Attest:

McCOY M. GIBSON JR.
Attesting Officer

C. MARSHALL DANN
Commissioner of Patents

FORM PO-1050 (10-69)

USCOMM-DC 60376-P69
☆ U.S. GOVERNMENT PRINTING OFFICE : 1969 O—366-334