Feb. 19, 1957 R. M. MAGNUSON 2,781,993

PROCESS OF WEIGHT FILLING OF CONTAINERS

Filed April 13, 1951 2 Sheets-Sheet 1

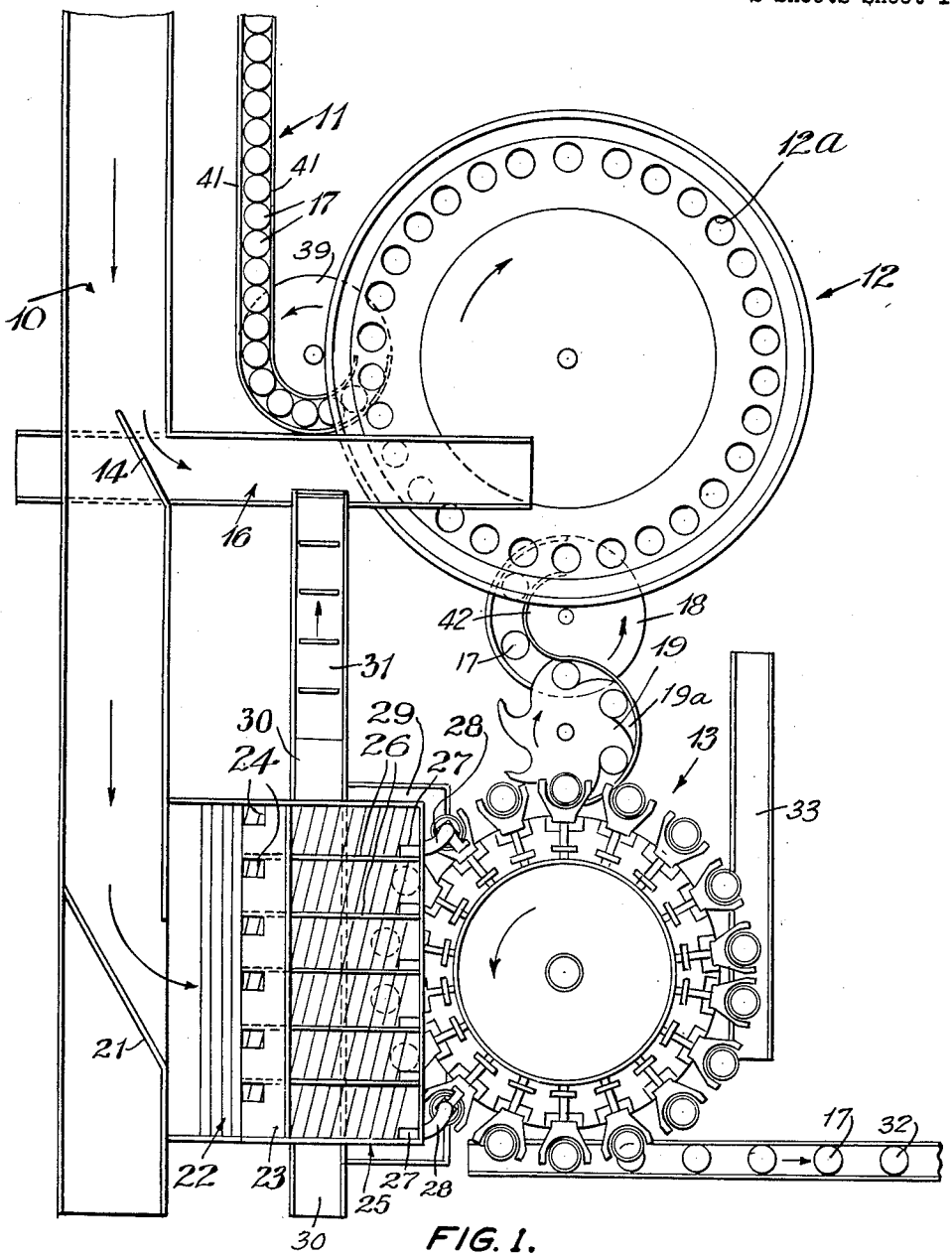

FIG. 1.

INVENTOR.
ROY M. MAGNUSON
BY Harpman Gelen
ATTORNEY.

Feb. 19, 1957 R. M. MAGNUSON 2,781,993

PROCESS OF WEIGHT FILLING OF CONTAINERS

Filed April 13, 1951 2 Sheets-Sheet 2

FIG_2

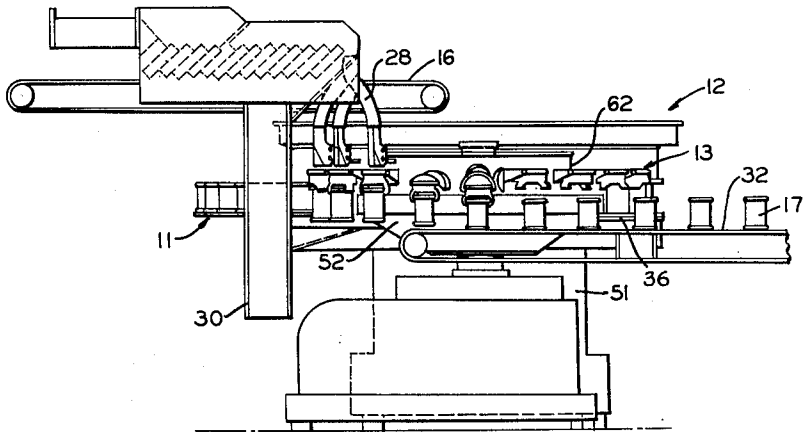

FIG_3

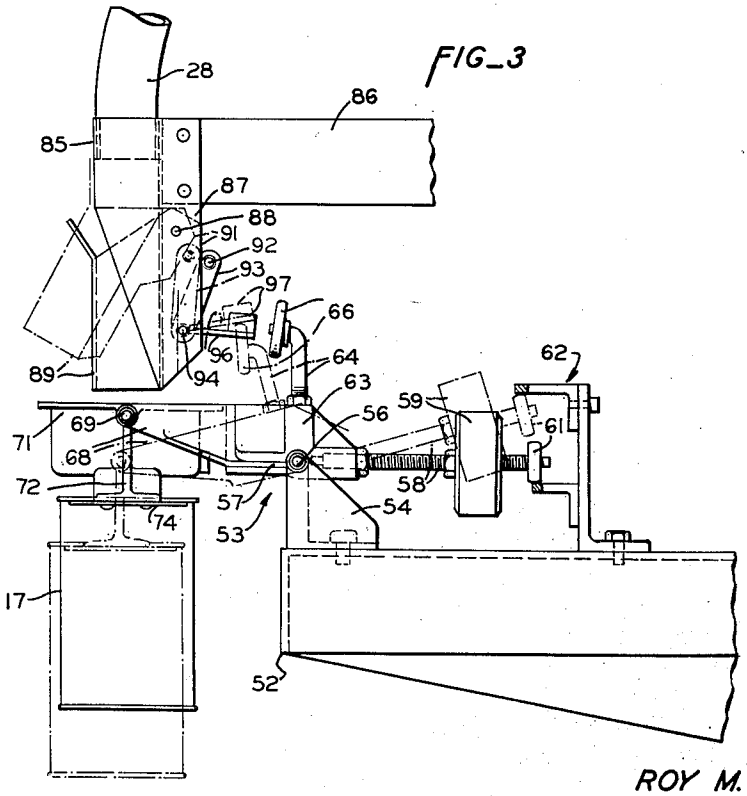

INVENTOR.
ROY M. MAGNUSON

BY

ATTORNEY

United States Patent Office 2,781,993 Patented Feb. 19, 1957

2,781,993

PROCESS OF WEIGHT FILLING OF CONTAINERS

Roy M. Magnuson, Campbell, Calif.

Application April 13, 1951, Serial No. 220,932

5 Claims. (Cl. 249—18)

The present invention relates to the weight filling of containers with discrete articles, such as olives, prunes, and the like, where the weight of the material within the container usually must be overweight by a part of the weight of one unit and where overweight filling in excess of one unit results in loss of yield in the packing operation.

It is the general object of the invention to provide a new method of weight filling of containers whereby the containers are always filled to the desired amount, i. e., to a desired net weight within the weight range of a single unit in a continuous and advantageous manner.

Another object of the invention is to provide a process of the above character in which the material or units of material are all flowing continuously toward the containers and at no time is there a holding zone where a part of the material can remain indefinitely, whereby the method is particularly adapted to the hot filling of articles, for example, prunes.

The above and other objects of the invention will be apparent from the following description of a preferred method of carrying out the invention as illustrated in the accompanying drawings, in which:

Figure 1 is a plan view of a weight filling apparatus which may be employed for carrying out the process of this invention;

Figure 2 is a side elevational view looking from the bottom of the view shown in Figure 1, with certain parts illustrated schematically; and

Figure 3 is a detail elevational view illustrating one of the weighing units shown in Figures 1 and 2.

In general, the method of this invention comprises the establishing of a flow of the material to be filled as an indiscriminately arranged mass and in approximately the proper amount required with respect to a simultaneous flow of containers which is established in conjunction with the flow of material. The flow of material to be filled has a portion diverted to coincidence with the file of containers for underfilling of the containers to a desired degree, preferably within the weight of from 1 to 6 units of the material by weight. This diverted flow of the material is filled into the containers, for example, by hand filling operation, and the undiverted flow of material is carried into a single filling means where a plurality of parallel files of the units of the material are provided for a unit-by-unit feed into the partially filled containers. This unit-by-unit feed is positioned in an intersecting relation with respect to the path of movement of the containers in a final weight filling zone so that a unit from each of the parallel files can be placed successively in each container passing through this zone. The timing of the unit-by-unit feed of the individual parallel files is related to the timing of movement of the containers so that a series of containers is presented simultaneously to the discharge ends of these parallel files and each container may receive a unit of material therefrom. Preferably the single filing of the material or units of material into these

individual files is accompanied by an excess flow of units from the discharge ends thereof and this excess is returned to join with the first diverted portion of the material in the preliminary underfilling operation.

As an underfilled container enters the weight filling zone, it is carried by a weighing unit so that as it receives an individual unit of material from the discharge end of each path of single file flow, its weight is increased by the weight of this unit and when the proper weight has been obtained in a container, subsequent discharges of the succeeding single file paths with respect to this container are diverted and returned with the excess flow from the single filing means to the underfilling portion of the apparatus.

Referring to Figures 1 and 2, the apparatus there illustrated includes a belt-type material conveyor **10** and a belt-type can conveyor **11** which carry the respective flows of material and cans into the processing zones including an underweight filling zone in which a rotary hand type filler **12** is located and a unit-by-unit weight filling zone in which a weight type filling unit **13** is provided. This apparatus is disclosed and claimed in copending application Serial No. 220,933 of Roy M. Magnuson and Traver J. Smith, filed April 13, 1951, for Apparatus for Weight Filling of Containers. A portion of the material carried on the conveyor **10** is diverted by a gate **14** to a transversely extending belt-type conveyor **16** which discharges into the center of the rotary hand filler **12**.

The filler **12** is of conventional construction and consists of a rotary table **36** spaced below an upper hopper **37** which rotates therewith and is provided with a series of spaced apertures **12***a*. The cans **17** are moved by the conveyor **11** between the guide rails **41** to the transfer disc **39** and they are placed in properly spaced relation on the table **36** beneath the apertures **12***a*. The operator merely scoops material from the central portion of the hopper into the apertures **12***a* to cause a desired approximate amount of the material to fall into the aligned containers.

The cans **17** are underfilled by weight in the underfilling zone in which the rotary hand filler **12** is located. As the table **36** of this filler rotates the underfilled cans are brought to the rails **42** and guided thereby to the rotating transfer disc **18** which carries them to the star wheel **19** and the support plate **19***a* associated therewith. The star wheel **19** in turn moves each can **17** into proper aligned relation with respect to the associated weighing unit of the weight filling unit **13** as will be described hereinafter.

The portion of the unit material conveyed on the belt conveyor **10** which is not diverted by the gate **14** onto the conveyor **16**, is carried by the conveyor **10** toward the gate **21** and is diverted by this gate **21** onto a first stage shuffle feed mechanism **22**. The mechanism **22** has at its discharge end a barrier or wall **23** having a plurality of openings **24** therein through which the material is divided into a plurality of individual feeds and fed onto a second stage or single filing type shuffle feeder **25** which is divided into six parallel sections by partitions **26**. The wall **23** is provided with six openings **24**, one opening corresponding to each of the six parallel sections in the single filing feeder **25**. Each of these parallel sections has the blades thereof positioned in the bottom thereof, inclined to the horizontal and angled transversely of the path of travel of the units of material. In their progress through these parallel sections said units of material are urged by these blades toward a side wall **26** of the respective parallel section and moved along this wall to the corresponding discharge opening **27** associated with the respective parallel section as described in detail in Patent No. 2,728,443 for Shuffle Feed Mechanisms, issued De-

cember 27, 1955 to the owner of the present application. The openings **27** are each of a size to pass a single individual unit of the material only. These openings provide exits from the lower right hand corners of these parallel sections, as shown in Figure 1, into flexible discharge chutes **28** shown in Figure 2.

The operation of the single filing shuffle feed mechanism is such that a timed unit-by-unit single file feed of the material is provided from each of these openings **27**. Thus each time the shuffle-feed mechanism operates, a unit of the material is discharged from each of said openings at the ends of the six individual and parallel single filing sections.

The weight filling unit **13** (Figures 1 and 2) comprises a base **51** on which a rotary turret **52** is journalled for constant rotation in the usual manner. This turret **52** is driven synchronously with the table **36** of the hand filler **12** in any convenient manner. A plurality of peripherally spaced weighing units **53**, one of which is shown in detail in Figure 3, are supported by U-shaped brackets **54** around the peripheral portion of the turret **52**. Each U-shaped bracket **54** pivotally supports a pivot shaft **56** upon which a weight or scale lever **57** is mounted. An inwardly and radially projecting balance arm **58** is attached to the lever **57** and this arm is threaded to receive an adjustable weight **59** thereon. At its free end each arm **58** has journalled thereon a roller **61** for cooperation with a cam mechanism or track **62**.

Each lever **57** also includes an upwardly extending boss **63** into which there is threaded a shaft extension **64** carrying a control roller **66** on its horizontally bent upper portion. A bifurcated arm **68** is provided to the outer end of the scale lever **57** for the purpose of supporting the pivot studs **69** which engage the filling ring or collar **71** of the container support means. The collar **71** is provided with opposite downwardly extending can supporting arms **72** terminating in respective flat bottom pads **73** to which can lift plates or elements **74** are detachably secured. The collars **71** are disposed in outboard relation to the turret **52**.

As the turret **52** and the star wheel **19** are rotated with respect to each other, partially filled cans **17** are moved by said star wheel into position between the can engaging lips **77** of the weighing units **53** as these weighing units **53** are presented one after another to said star wheel. The partially filled cans **17** received by the weighing units **53** are carried by the turret **52** around to the unit-by-unit weight filling zone where the underfilled cans receive one or more units of material to fill them to or slightly in excess of the desired weight.

In the unit-by-unit weight filling zone, units of the material are discharged from the discharge ends of the single filing shuffle feed mechanisms in timed relation with respect to the operation of the shuffle feed mechanism so that the row of containers **17** presented to the said discharge ends will each receive one or more units of material from one or more of said discharge ends until the appropriate weight has been reached by each container. Thereafter subsequent single unit feeds are bypassed and the excess units of material do not enter the filled containers.

The excess material which is carried through these single filing sections to insure continuous single filing without interruption, passes onto a ramp **29** and a transverse belt-conveyor **30**, as will be described hereinafter. The conveyor **30** discharges onto an elevating flight type conveyor **31** whose discharge end overlies the conveyor **16**, so that the units of the excess material are added to the material supplied to the underfilling zone. Each of the weight filling units of the unit-by-unit weight filling mechanism **13** is tripped when an appropriate number of units have been added to the container carried thereby to exceed the desired net weight within the container. The subsequent discharges through the succeeding chutes **28** are then diverted onto the ramp **29** for return by the conveyor **31** to the underfilling zone as described above and for this purpose the chutes **28** are provided with suitable movable end members that will now be described.

Each flexible discharge chute **28** (Figure 3) is connected at its lower end to a collar **85** that is attached to a frame member **86** which has spaced-apart support plates **87** depending therefrom. Pivotally mounted at **88** in the respective plates **87** is a movable end chute member **89** having its discharge end positioned over the path of travel of the collars **71**. Each member **89** has a rearward cam surface **91** associated with a pin **92** carried by a lever **93** that is pivotally supported in the plates **87** by the pivot **94**. The lever **93** has an outwardly extending L-shaped arm **96** terminating in a cam end **97** that lies in the path of a roller **66** when the latter is moved to its dotted line position. From the above description, it will be seen that when a can **17** is underweight and the control roller **66** is in its full line position, shown in Figure 3, then the lower movable end portion or chute member **89** of the discharge chute **28** remains in alignment with the end of a related can weighing unit **53** so that a unit of the fruit or other article being filled will go into the can **17** aligned therewith. However, if a unit from one chute **28** fills the can to an overweight condition, the can weighing unit tilts rapidly to move the control roller **66** from its full line position in Figure 3 to its dotted line position so that it will engage the cam end **97** of the subsequent unit fill station and the chute member **89** thereof will be tilted from the position shown in full lines in Figure 3 to the dotted line position. As a result, the unit fed at the time the overweight container **17** is associated with this particular filling station will be discharged on to the ramp **29** rather than being placed in the container.

As the result of this operation, an underweight container will continue to receive a single unit feed as it passes each unit filling station until it becomes overweight and then the remaining unit feeds, with respect to this particular overweight container, will be diverted or bypassed back to the underweight filling zone and the can will receive no further units. The containers which are filled to the desired weight are released from the weight filling mechanism onto a discharge belt **32** while containers which for one reason or another may still be underweight are carried past the conveyor **32** and discharged onto an underweight discharge conveyor **33** for recycling through the process at a desired time.

From the above description, it will be seen that the process provides for proper weight filling of cans with units of material with the last unit of material placed in the cans bringing the net weight of the contents to the desired net weight or an amount exceeding the net weight by less than the weight of one unit of material.

Also the process is a continuous one wherein a continuously moving file of the material to be filled and a continuously moving file of containers are fed into the process, and in the same continuous fashion containers filled to the proper net weight result from the process. Any overflow material is recirculated within the process so that the process is adaptable to products which require hot filling or with which hot filling is desirable.

While in the description reference has been made to the use of cans, it is obvious that other types of containers can be employed equally as well and that the method can also be carried out with the use of containers for subsequent filling into bags or with bag supporting containers carried through the process.

Where carrier containers are employed, either as bag supports, or for temporary carrying of the product until subsequent transfer to the final package or can, it is desirable to make the carrier containers to an exact uniform weight. This avoids any influence of differences in the container weights on the net weight filling of the

contents, which is desirable, particularly with products where the net weight is light, nut meats, for example. The word "container", as employed in the description and claims, is used generally and applies to all forms of container, whether the final form of package or merely a carrier.

While I have described a preferred method of carrying out the invention, it will be apparent that the invention is capable of variation and modification, so that its scope should be limited only by the proper scope of the claims attached hereto.

I claim:

1. The method of filling containers to a desired net weight content with material of a character having units of measurable size and weight which comprises establishing a flow of material to be filled, establishing a flow of containers and carrying the containers through an underfilling zone and a unit-by-unit weight filling zone, diverting a part of the flow of material into the underfilling zone and underfilling containers therein, transmitting the remainder of the flow of material and establishing a plurality of parallel unit-by-unit files of the material progressing in a timed relation to the progress of the containers through the weight filling zone, bringing a series of the containers simultaneously into register with the discharge ends of the unit-by-unit files and successively placing a unit feed into each container until the desired weight is reached, and thereafter diverting any subsequent unit-by-unit feed with respect to a container filled to the desired weight.

2. The method of filling containers to a desired net weight content with material of a character having units of measurable size and weight which comprises establishing a flow of material to be filled, establishing a flow of containers and carrying the containers through an underfilling zone and a unit-by-unit weight filling zone, diverting a part of the flow of material into the underfilling zone and underfilling containers therein, transmitting the remainder of the flow of material and establishing a plurality of parallel unit-by-unit files of the material progressing in a timed relation to the progress of the containers through the weight filling zone, bringing a series of the containers simultaneously into register with the discharge ends of the unit-by-unit files, and successively placing a unit feed into each container until the desired weight is reached, and thereafter diverting any subsequent unit-by-unit feed with respect to a container filled to the desired weight and returning the diverted unit-by-unit feed to a flow of said material.

3. The method of filling containers to a desired net weight content with material of a character having units of measurable size and weight which comprises establishing a flow of material to be filled, establishing a flow of containers and carrying the containers through an underfilling zone and a unit-by-unit weight filling zone, diverting a part of the flow of material into the underfilling zone and underfilling containers therein, transmitting the remainder of the flow of material and establishing a plurality of parallel unit-by-unit files of the material progressing in a timed relation to the progress of the containers through the weight filling zone, bringing a container successively into register with the discharge ends of said unit-by-unit files, and successively placing a unit feed into each container until the desired weight is reached, and thereafter diverting any subsequent unit-by-unit feed from said files with respect to a container filled to the desired weight.

4. The method of filling containers to a desired net weight content with material of a character having units of measurable size and weight which comprises establishing a flow of material to be filled, establishing a flow of containers and carrying the containers through an underfilling zone and a unit-by-unit weight filling zone, diverting a part of the flow of material into the underfilling zone and underfilling containers therein, transmitting the remainder of the flow of material and establishing a plurality of parallel unit-by-unit files of the material progressing in a timed relation to the progress of the containers through the weight filling zone by establishing an excess flow of material for each file and diverting the excess over and above the amount required for a single file, bringing a container successively into register with the discharge ends of said unit-by-unit files, and successively placing a unit feed into each container until the desired weight is reached, and thereafter diverting any subsequent unit-by-unit feed from said files with respect to a container filled to the desired weight.

5. The method of filling containers to a desired net weight content with material of a character having units of measurable size and weight, which comprises establishing respective continuous flows of containers and material, directing a portion of the material into coincidence with the flow of containers, under filling the containers with the material in an under filling zone, transmitting the remaining flow of material to a single filing zone which is partially coincident with the path of containers, effecting a unit-by-unit feed of material to the containers as they travel through said last mentioned zone, diverting said unit-by-unit feed with respect to a container after feeding of the unit which causes the contents of the container to reach or exceed the desired net weight, and directing the units of diverted material from the unit-by-unit feed to the flow to the under filling zone.

References Cited in the file of this patent

UNITED STATES PATENTS

720,008	Doble	Feb. 10, 1903
992,148	Bates	May 16, 1911
1,300,274	Jefferies	Apr. 15, 1919
1,345,864	Lethern	July 6, 1920
1,602,578	Ingram	Oct. 12, 1926
1,713,575	Warwick	May 21, 1929
2,137,334	Dorrington	Nov. 22, 1935
2,077,152	Nowak	Apr. 13, 1937
2,186,471	Beede	Jan. 9, 1940
2,198,788	Popov	Apr. 30, 1940
2,451,534	Christensen	Oct. 19, 1948
2,496,019	Peel	Jan. 31, 1950
2,502,380	Howard	Mar. 28, 1950
2,603,443	Miller	July 15, 1952

FOREIGN PATENTS

302,366	Great Britain	May 14, 1930
501,117	Great Britain	Feb. 21, 1939