(19) Europäisches Patentamt
European Patent Office
Office européen des brevets

(11) EP 1 629 148 B1

(12) **EUROPEAN PATENT SPECIFICATION**

(45) Date of publication and mention of the grant of the patent:
17.06.2009 Bulletin 2009/25

(21) Application number: **04739683.3**

(22) Date of filing: **04.06.2004**

(51) Int Cl.:
D06F 57/08 *(2006.01)*

(86) International application number:
PCT/EP2004/006154

(87) International publication number:
WO 2004/109007 (16.12.2004 Gazette 2004/51)

(54) **IMPROVED RACK**

WÄSCHETROCKNUNGSGESTELL

ETENDAGE AMELIORE

(84) Designated Contracting States:
AT BE BG CH CY CZ DE DK EE ES FI FR GB GR HU IE IT LI LU MC NL PL PT RO SE SI SK TR

(30) Priority: **04.06.2003 NL 1023594**

(43) Date of publication of application:
01.03.2006 Bulletin 2006/09

(73) Proprietor: **Vorscon Holding B.V.**
3446 BE Woerden (NL)

(72) Inventor: **VAN EIJK, Marinus**
3446 BE Woerden (NL)

(74) Representative: **Ferguson, Alexander**
Octrooibureau Ferguson BV
P.O. Box 970
3800 AZ Amersfoort (NL)

(56) References cited:
GB-A- 686 038 **US-A- 2 443 696**

- **PATENT ABSTRACTS OF JAPAN vol. 2003, no. 05, 12 May 2003 (2003-05-12) & JP 2003 010596 A (SEKISUI JUSHI CO LTD), 14 January 2003 (2003-01-14) cited in the application**

Note: Within nine months of the publication of the mention of the grant of the European patent in the European Patent Bulletin, any person may give notice to the European Patent Office of opposition to that patent, in accordance with the Implementing Regulations. Notice of opposition shall not be deemed to have been filed until the opposition fee has been paid. (Art. 99(1) European Patent Convention).

EP 1 629 148 B1

Printed by Jouve, 75001 PARIS (FR)

Description

[0001] The present invention concerns a rack, a drying rack in particular. The usual drying rack has the disadvantage that the inner clotheslines are difficult to reach. When hanging out the laundry it must be taken from one hand to the other at the upper side or bottom side of the rack, in order to be fixed with clothes pegs. When the laundry has dried the same actions have to be performed for the second time.

[0002] When hanging out laundry one always has to perform a lot of actions, which costs a lot of time. Moreover one often is short of clothes pegs, due to which laundry is hung unfixed. This may cause the laundry to drop on the ground and get dirty. Besides one often leaves the clothes pegs on the rack, so that the rack is hard to collapse and the clothes pegs can be damaged.

[0003] From JP 2003/010596 we already know of a collapsible drying rack, made up of a stand consisting of two swivelling connected U-shaped frames and a number of drying arms connected to them. The drying arms stretch diagonally to the stand, so that laundry can be hung on them more easily than on conventional drying racks. The laundry still has to be fixed to the drying arms, for example with clothes pegs.

[0004] From US 2, 443, 696 we know of another drying rack, made up of a hanging part that forms a vertical axle. A number of drying arms are mounted on top of each other, swivelling around this axle. Each drying arm is constructed two-fold, so that in the arm a slot is formed accessible through a narrow opening in the side of the drying arm. In this slot the laundry can be hung.

[0005] The aim of the invention is to provide an improved drying rack, one on which it is easy to hang laundry without the laundry needing to be fixed separately. According to the invention this is achieved by means of a drying rack fitted with at least one pair of mainly parallel, elongated, mating clamping elements, one end of each of which being fixed to a support, so that the mating clamping elements form a narrow, slot-shaped space in between for the clamping of the laundry. By using one or more pairs of clamping elements, between which laundry can be slid from each free end and be clamped at the same time, an easily constructed drying rack is obtained, on which laundry can be hung fast.

[0006] In order to be able to slide the laundry simply into the slot-shaped gap, the free ends of the mating clamping elements of this or each pair are preferably slightly bent apart, to form a widened in-feed piece of the slot-shaped opening.

[0007] In order to fix the laundry optimally it is preferred that the mating clamping elements of each pair are constructed as springs pre-stressed towards each other.

[0008] In order to be able to hang a large quantity of laundry on the drying rack, several pairs of clamping elements can be fixed to the support.

[0009] A construction-wise simple version with only few components is obtained when the pairs of clamping elements are positioned in a common, mainly horizontal plane and the clamping elements of adjoining pairs are interconnected.

[0010] In order to be able to hang relatively thick laundry, such as for example pillows or duvets between adjoining pairs of clamping elements, it is preferable for the pairs of clamping elements to be in a common, mainly horizontal plane and be movable along the support.

[0011] A compact drying rack is obtained when the pairs of clamping elements are in a common, mainly vertical plane and are connected swivelling to the support. In order to keep the laundry free from the ground the drying rack preferably shows mediums for suspending the support and the clamping elements connected to it, at a certain distance from the ground.

[0012] A rack to be put up stably and to be stored easily is obtained when the suspension mediums are shaped like a collapsible stand comprising two mainly U-shaped frames connected with their free ends swivelling to an axle. Preferential versions of this variant of the drying rack are described in the claims 14 to 20.

[0013] In order to be able to suspend the drying rack to a balcony for example, the suspension mediums can comprise couple of hook-shaped suspension elements. Preferably applied variants of this version are the matter of claims 22 to 24.

[0014] When the suspension mediums contain at least one telescopically collapsible or extending clamp pipe, the rack can simply be clamped between two walls or something of the like.

[0015] It is also conceivable that two supports are connected back to back with each other, in such a way that the clamping elements fixed to them stretch mainly in one common plane in opposite directions and the suspension mediums are made up of at least two mainly U-shaped frames, each connected on one side of the supports with the clamping elements. Thus a compact drying rack is obtained, which, for example, can be placed on a table.

[0016] When the suspension mediums comprise a pipe-shaped stand, to which, circumferentially a number of supports are fixed, the drying rack can be placed as a collapsible clothesline in for instance a garden. In this case the rack has the advantage that it can contain a cover to be tightened across the supports and clamping elements, so that it can be used as a sunshade when it is not being used as a drying rack.

[0017] In order to intensify the grip on the laundry the clamping elements could be fitted with ribs and/or bendings.

[0018] The present invention has the advantage that the drying rack is better accessible and that the laundry can be fixed to the drying rack in one movement. Thus fewer movements are required, which saves time. Since the laundry is clamped evenly across the full width, it can better withstand gusts of wind and is prevented that one part of a garment stretches more than the other. The separate components make the drying rack better col-

lapsible and situations risky for children are avoided, because clothes pegs are no longer needed.

[0019] Below the invention will be described on the basis of a number of examples referring to the added drawing, corresponding components being indicated with identical figures of reference and in which:

Fig. 1 shows a perspective view of the first version of the drying rack in accordance with the invention with U-shaped clamping elements,
Fig. 2 shows a perspective view, in which the drying rack of fig. 1 has been partly collapsed,
Fig. 3 shows a perspective view, in which the drying rack has been folded completely,
Fig. 4 shows a view of a drying rack similar to fig. 1, in which the clamping elements are used as springy bars,
Fig. 5 shows a perspective view in which the springy bars have been fixed parallel to the swivel axle of the stand,
Fig. 6 shows a perspective view of a second version of the invention, in which the rack has been fitted with suspension hooks,
Fig. 7 shows a perspective view (in disassembled state) of the third version, which can be used as a towel rack and which has been fitted with springy bars,
Fig. 8 shows a perspective view of the version of fig. 7 in an assembled state,
Fig. 9 shows a view of a drying rack similar to fig. 1, in which the outer U-shaped clamping elements have been fitted with a torsion spring,
Fig. 10 is a perspective detail view in an enlarged scale of the U-shaped clamping elements of fig. 9,
Fig. 11 shows a perspective view of a fourth version of the rack, which can be suspended between two walls by means of two telescopic pipes,
Fig. 12 is a perspective detail view in an enlarged scale of the short pipe and the rubber end cap of fig. 11,
Fig. 13 shows a view of a drying rack similar to fig. 1, in which the rack has been produced of rolled section,
Fig. 14 shows a perspective view of a variant in which the springy bars at the back have been fitted with a clamping system for detachable connection with a stand,
Fig. 15 shows a perspective view of the version of fig. 14 in an assembled state,
Fig. 16 shows a fifth version of the invention, in which the rack has been produced as a table-top model,
Fig. 17 is a perspective detail view in an enlarged scale of the two coupling elements of fig. 16,
Fig. 18 is a perspective detail view in an enlarged scale of the coupling element between the outer U-shaped profiles of fig. 16,
Fig. 19 is a perspective detail view in an enlarged scale of the clamping balls of fig. 16,
Fig. 20 shows a side view of the coupling element fitted with a compression spring,
Fig. 21 shows a view similar to fig. 20, in which the coupling element has been shifted,
Fig. 22 shows a perspective view of a variant of the second version, in which the balcony rack is fitted with rolled sections,
Fig. 23 shows a perspective view, in which the suspension mediums and the rack are fitted parallel,
Fig. 24 shows a sixth version of the invention, in which the drying rack is styled as a collapsible clothesline with oval-shaped profiles,
Fig. 25 shows a perspective view, in which the springy bars at the end have been bent arch-wise.

[0020] The improved drying rack in accordance with the invention comprises a stand or standard 13, made up of two U-shaped frames 1 (fig. 1, 2 and 3) of which the end comprises a flat piece 2, the centre of which has been fitted with an opening 3. The two U-shaped frames 1 are linked together at the end of the flat piece 2 by means of a rivet 4, so that the two components can be swivelled in relation to each other. Near the free end and near the centre of each of the U-shaped frames 1 are two supports or axles 5, 6, which have been entered rotating at the inner side 9 of the U-shaped frame 1. Off the lower axle 5 the standard is fitted with a connecting element 10, which can swivel around the end of the lower axle 5 through the opening 11 formed at the outer end. The other end is fitted with an integrated hook 12, which is in contact with the opposite axle 5 of the second U-shaped frame 1. Thus the two U-shaped frames 1 are fixed in a certain position, due to which together they form the standard 13. Moreover the standard 13 is fitted with four locking instruments 14, which, through the opening 15 formed at the bottom end, can rotate around the pin 16 of the standard 13. The centre and the end of the locking instrument 14 are fitted with a nick 17, 18. Pairs of clamping elements are fixed to the supports or axles 5, 6, in the example shown the clamping elements of each two adjoining pairs being linked into U-shaped bars 19, of which the free ends 20 have been connected diagonally to the axle 5, 6. Parallel to the axle 5, 6 the U-shaped bars 19 are interconnected by means of a second axle, which reinforces it all. The outer U-shaped bars 21 are fitted with a position pin 22, which is in contact behind the nick 17, 18 of the locking instrument 14, due to which the drying rack is fixed in a certain position.

[0021] The unfolded drying rack 23 can easily and fast be uncoupled by slightly lifting the rack 23. Thus the position pins 22 of the U-shaped bars 21 are brought out of contact of nick 17, so that the rack 23 can be collapsed again. Turning the two locking instruments 14 and pulling them a little apart and release them again as soon as the opening 24 is opposite the top axle 6, provides a very simple locking. Because the position pins 22 of the U-shaped bars 19 are retained by the nick 25, 26 of the locking instrument 14, both the bottom and the top rack

23 are fixed at once. Thus the standard 13 can easily be moved without any fingers being jammed in the rack 23. The long bars 27 of the U-shaped bar 19 are constructed with a slight bending at the end. As a consequence of this the two U-shaped bars 19 will gradually abuttingly engage each other, so that laundry will simply find a way between the two U-shaped bars.

[0022] By pushing the laundry between the two U-shaped bars 19, the laundry is clamped at once to the drying rack 23. Owing to the improved accessibility and the fact that clothes pegs are no longer needed, the duration of hanging out laundry has been reduced considerably. Moreover the drying rack without clothes pegs can be collapse more easily.

[0023] In order to fix the laundry even better to the drying rack, the drying rack could be fitted with springy bars (fig. 4) instead of the U-shaped bars. Close to the cross axle 5, 6 the bar 28 is bent arch-wise until, in relation to the cross axle 5, 6, it sticks out vertically, due to which a spring 29 is created as it were. This clamps laundry even better, so that even in gusts of wind the laundry will remain on the drying rack. The springy bar is preferably produced of material having springy qualities, such as for instance spring steel.

[0024] In the versions described above the U-shaped bars and/or springy bars are mounted diagonally on the axle. These bars could possibly also be fixed parallel to the axle 5 (fig. 5). In this case, instead of the axle an L-shaped brace 30 is used, of which the short bar 31 has been entered swivelling in the opening 7, 8 of the U-shaped frame 1.

Parallel to the short bar 31 the standard 13 is fitted with short springy bars 32, of which the long end 33 is connected diagonally to the long part 34 of the L-shaped brace 30. In this way the standard 13 could be placed in a corner, without loss of accessibility.

[0025] To improve the grip of the laundry the springy bars could be fitted with ribs or bendings, possibly constructed in a staggered way, so that the laundry is clamped even better.

[0026] To make the drying rack suitable to be mounted on a balcony or wall, the rack could be constructed with two suspension mediums. In particular the left-hand and right-hand sides of the rack 23 are fitted with a swivelling frame 35 (fig.6), which, through openings 36, 37 formed at the end, can swivel around the bar 38 of the U-shaped frame 39. The ends 41 of the outer springy bars 40 are connected to the U-shaped frame 39 by means of a small connecting bar 42, which reinforces it all. The swivelling frame 35 is fitted at the back wit an integrated hook 43, so that the rack 23 can be suspended. After use the rack 23 can be collapsed again by folding in the two swivelling frames 35, so that the rack only takes up limited space.

[0027] Fig. 7 is an alternative version of the invention, in which a towel rack is fitted with clamping elements. In particular the mounting plate 44 at the top and bottom is constructed with a short bar 45, which, at the end 46, is fitted with a pipe-shaped element 47. Through both pipe-shaped elements 47 a pin 48 is applied, secured at the bottom by a securing ring 49 entered in a groove 50. Moreover at the backside 52 the cover piece 51 is fitted with four rectangular openings 53, which, at the averse side of the mounting plate 44 are constructed with a stop rim 54 sticking out, and the mounting plate 44 is fitted with four springy lips 55 with snap rims 56 that make contact behind the stop rim 54. This has made a connection between the mounting plate 44 and the cover piece 51 that can easily and fast be disconnected, i.e. by pressing the four press lips 57. In this way the snap rims 56 of the springy lips 55 are brought out of contact with the stop rim 54. Now the cover piece 51 can be removed from the mounting plate 44. Between the top and bottom short bar 45 the mounting plate 44 is fitted with three springy bars 32 that can swivel around the pin 48 through the opening 58 formed at the outer end.

[0028] When, in this version, a towel is not hung parallel across one of the springy bars, or when one side is wetter than the other, the clamping effect of the clamping elements will prevent a towel from falling on the ground over and over again.

[0029] It is also possible to combine U-shaped bars and/or springy bars. In this respect one side of the U-shaped bar 19 could for instance be bent arch-wise 124 so that, with a large loop 125, it can be connected parallel to the long bar 126 with the axle 6 in fig. 9 and 10. In order to reinforce the construction of the U-shaped bars 19 the centre and end is constructed with a plastic connecting piece 127, 134. The connecting piece 127 is coupled to the threaded rods 128 by means of the slots 129 fitted on either side, that partly show the same contour as the threaded rods 128. Instead of just the outer ones in this version all of the U-shaped bars 19 are fixed in a certain position by the locking arm 14. One side of the locking arm 14 is coupled to the axle 5 and the bent piece 130 is clamped swivelling in the central connecting piece 127. The outer U-shaped bars 19 are fitted with a torsion spring 29, the short end 132 of which is coupled to the axle 6 and the long end 133 partly sticks out through the front connecting piece 134. When a thick garment is hung between the two U-shaped bars close to the axle 6, both ends 135 of the U-shaped bars 19 will press harder together, so that in this place a very thin garment can possibly be hung.

[0030] Figures 11 and 12 are versions in which the rack 23 can be fixed between two walls by means of telescopic pipes. In this version the rack 23 is mounted to two long pipes 136 the ends 137 of which are fitted with an opening 141.

Internally of the long pipe 136 a short pipe 138 partly sticks out at both ends 137. The short pipe 138 preferably has the same girth as the internal diameter of the long pipe 136. The short pipes 138 are lengthwise fitted with a number of openings 139 and one end is fitted with a tapped hole 140. Through the openings 139, 141, of the long and a short pipe 136, 138, is a locking pin 142, so that the two parts are fixed. Moreover the rack 23 is fitted

with two rubber end caps 143 the threaded end 144 of which is tightened in the tapped hole 140 of the short pipe 138.

[0031] To be able to clamp the drying rack between two walls, the locking pin 142 must be removed first and next slide in or out the short pipes 138, after which the short pipes can be fixed again by the locking pins 142. The threaded end 144 of the rubber end cap 143 can possibly be turned in or out further to obtain the length desired in a continuously variable way.

Since the drying rack is constructed with telescopic bars, it can be clamped between any walls without taking much space.

[0032] Instead of using wire steel for the drying rack, it could also be constructed of rolled section fig. 13. This would make the drying rack much faster to assemble because it takes fewer components. In this case the U-shaped profile 145 shows lengthwise ribs 146, fitted in such a way that, when the profiles are staggered next to each other, the round raised rim 147 exactly fits the hollow space 148 of the adjoining U-shaped profile. Owing to the ribs the garments are clamped even better and the bars will be a lot stronger. By means of a created opening 192 and slot 193 the U-shaped profile 145 can swivel at the end around the axle 6 of the standard 13. Between the U-shaped profiles 145, around the axle 6 is a compression spring 150. The outer U-shaped profiles 151 are fitted with a torsion spring 29, the short end 132 of which is coupled to the axle 6 and the long end 133 is placed against the inside of the U-shaped profile. These compression springs 150 and torsion springs 29 make the U-shaped profiles being pressed together.

[0033] When a garment is pushed between the two U-shaped profiles 145, the side of which the end is fitted with a slot 193 will shift lengthwise along the axle 6. Since behind this slot a compression spring 150 is positioned, the latter will be compressed. The garments are clamped over the full length by this compression spring and the torsion springs.

[0034] In order to be able to dry garments of varying thickness the form and/or the size of at least one clamping element can be adjusted.

[0035] The springy bars 32 are preferably made of plastic and the back 96 shows a fork-shaped element 97,of which both insides are constructed with two half-round nicks 98 (fig. 14). The material of the fork-shaped element 97 is reduced 99 between the two half-round nicks 98, so that the fork-shaped element 97 needs less bending when the latter is coupled to the two axles 6 of the standard 13. Moreover the top of the fork-shaped element 97 is fitted with a small opening 100. Through the opening sticks a knurled screw the threaded end 102 of which is screwed tight in the tapped hole 103 of the clamping strip 104. By loosening the knurled screw 101 the springy bar 32 can be shifted, to be screwed tight again in the position required. Since the distance between the two clamping systems 105 can be adjusted in a continuously variable way, for instance even pillows or duvets can be clamped between the springy bars 32.

[0036] Figures 16, 17 and 18 show an alternative version of the invention, in which the rack 23 is styled as a table-top model. The table-top model 152 comprises a number of oval-shaped profiles 153 one side of which is fitted with nicks 155 on the inside 154 and the two ends 156 are fixed at an angle of 15 degrees. As the two ends 156 press against the adjoining oval-shaped profile 153 they will move back into a position parallel to the piece 157 with the nicks 155. The centre of the drying rack is fitted with two connecting elements 158 fitted with a number of horizontal slots 159, one side of which is fitted with a raising 160. Off the nicks 155 of the oval-shaped profile 153 the slot 159 is fitted with two snapping rims 161, so that the oval-shaped profile will be fixed extra.

To improve the springy qualities of the profiles, the slots 159 could be fitted with an integrated spring 162. To create the spring 162 in one movement from a mould the top 163 is fitted with an opening 164. By connecting the two connecting elements 158 by means of a bolt 165 and nut 166 connection, the tops and bottoms 167 of the oval-shaped profile 153 are fully clamped by the raising 160. Since the other side of the slot 159 is made a bit wider here the end 156 of the oval-shaped profile 153 can move back and forth. Moreover the drying rack is fitted on both ends 168 with a U-shaped frame 169, which on both ends is fitted with a created opening 170 fig. 18. Through these openings is the axle 171 of the coupling element 172, with which these U-shaped profiles can fold and unfold. The coupling element 172 is coupled to the oval-shaped profile 153 by means of the slots 129 fitted on either side, of which the length is made such that it is clamped exactly in the front nick 194 of the oval-shaped profile 153. The inside of the coupling element 172 is fitted with two vertical and two horizontal slots 173. The slots 173 partly have the same contour as the one of the pipes of the U-shaped standard 169. To make the slots somewhat springy there is another straight narrow slot 195 between the two slots. As soon as the U-shaped stand 169 has been folded or unfolded completely the legs 175 will be fixed by the slots 173 of the coupling element 172, so that the rack is more stable and can be transported easily. Instead of the torsion springs, the legs 175 of the U-shaped frame 169 have been fitted at an angle of 5 degrees. When a garment is pushed between the two oval-shaped profiles 153, the side of which the end 156 is fitted slanting will spring inwards and the legs 175 of the U-shaped frame 169 will spring outwards. Since the legs 175 of the U-shaped frame 169 press against the outer oval-shaped profiles 153 and the slanting ends 156 in their turn press against the adjoining oval-shaped profiles, the laundry is clamped over the full length.

[0037] Owing to the fact that the rack is constructed by the oval-shaped profiles and since the connecting pieces, compression springs and torsion springs have disappeared, the number of parts is amply halved, so that the cost price will be considerably lower.

[0038] The springy qualities of the U-shaped frame can

possibly be increased, by constructing the two bent parts with a larger loop.

[0039] Apart from the metal oval-shaped profiles the drying rack could be combined with plastic bars fig. 19. One end of the bar 28 is preferably fitted with a clamping system 176 and the other end is fitted with an integrated ball 177. The clamping system 176 mainly consists of a vertical slot 178 that partly has the same contour as the oval-shaped profile 153. By coupling the plastic bars on either side of the rack, even more garments can be hung on the rack.

[0040] To somewhat improve the springy qualities of the rack a compression spring 180 could be fitted between the leg 175 fig. 20 and 21 of the U-shaped frame 169 and the inner wall 179 of the coupling element 172 around the axle 171. When, in this version, a garment is pushed between the oval-shaped profiles 153, the legs 175 of the U-shaped frame will remain stationary, but the distance between two coupling elements 172 will be extended a bit.

[0041] Fig. 22 is a version in which the balcony drying rack is constructed with rolled U-shaped sections. In this version the two ends 181 of the outer U-shaped profiles 182 are fixed to the two axles 183. The bar 184 of the small suspension medium 185 only sticks through the first two openings 186 of the front U-shaped profile 187. The large suspension medium 188 can swivel around the axle 183 of the rack 190 through openings 189 formed at the end.

[0042] In case of the above version one has to bend far over the balcony since the rack is much lower than the suspension mediums. The rack 190 can possibly also be suspended off the suspension mediums 185, 188 fig. 23. In this version both suspension mediums 185, 188 are connected at the bottom by a connecting bar 191. Since the suspension mediums are mounted to the rack the two suspension mediums can be folded within the area of the rack. Since the suspension mediums and the rack are at the same level, the laundry can be hung and taken off with a straight back.

[0043] Instead of threaded steel or rolled section practically the whole drying rack could be produced of plastic. But for the two U-shaped frames, the whole rack consists of a piece of plastic, in which the central part and the clamping elements are fitted with holes in the material. Thus one gets a very light construction that can be assembled very fast. In order to guarantee the relief process of the mould and to prevent the oval-shaped profiles from sliding across each other by the springy force of the U-shaped frame, the oval-shaped profiles are staggered-wise differently styled. Thus one has a straight contour rim and the adjoining oval-shaped profile has two slanting sides.

[0044] To assemble the drying rack very simply both ends of the U-shaped profiles could be fitted with a snap system designed in such a way that it can be coupled in one movement to the two connecting elements.

[0045] To be able to hang garments of most varying thickness side by side the hollow space of the profiles could be fitted with a soft material. Since the soft material easily adapts to the shape and thickness of a garment, for instance a much thinner garment can be hung without any problems beside a thick garment.

[0046] Since most garments are made of soft material, the profile could show a more pointed shape rather than a round raised rim. Thus a thick garment will be more compressed, due to which the seam between the two clamping elements remains limited, so that next to the thick garment a thin garment can be hung.

[0047] Figure 24 is an alternative version of the invention, in which the rack 23 is styled as a collapsible clothesline. In this version two connecting element 158 of the rack are connected on one end 196 by means of a hinge 197. At the bottom of the hinge 197 is a long pipe 198, which halfway the end is fitted with a guide piece 199. Moreover the collapsible clothesline 200 is fitted with two locking arms 201, of which the opening 202 formed at one end can swivel around the axle 203 of the guide piece 199 and the opening 204 formed at the other end is mounted rotating around the axle 205 of the connecting element 158. Thus the two racks 23 are fixed in a certain position, so that the laundry can be pushed onto the rack via the topside, without having to stand under the rack. After use the collapsible clothesline could serve as a sunshade, for this purpose a cover is tightened around the rack, so that one can sit out of the sun. Besides the rack remains clean and it can be an ornament in the garden.

[0048] Instead of threaded steel or rolled section the U-shaped and oval-shaped clamping elements could also be made of another type of profile. Thus it is also possible to produce the clamping elements of pipe, angle section, U-profile, square section or rectangular section.

[0049] In order to be able to create various styles the end of the clamping element could be fitted with an end cap, of which the shade and form can be adjusted. Possibly the end of the springy bars 32 fig. 25 could also be bent arch-wise, which will not only provide an elegant effect, but also prevents eyes from being damaged.

[0050] All versions can be combined and instead of parallel the U-shaped bars could also be fitted in a radial direction. In this case the U-shaped bars could be mounted to a vertical bar that is possibly mounted rotating on a base, so that the drying rack will be even more accessible.

The towel rack could possible be combined with a hairdryer, so that the latter can easily be stored in the holder.

[0051] Although the invention was described above in accordance with a number of version examples, the expert will understand from the above text that he is not restricted to this, but adjustments in many ways can be made within the scope of the claims.

Claims

1. Rack for hanging out clothing to be dried, particularly

laundry or towels, **characterized by** at least one pair of essentially parallel, elongated, closely adjacent clamping elements (19, 21, 28, 32), one end (20) of each element being mounted to a support (5, 6, 158, 163), the adjacent clamping elements forming a narrow, slot-shaped space for clampingly engaging the laundry.

2. Rack according to claim 1, **characterized in that** the pair of clamping elements (19, 21, 28, 32) are mating or abuttingly engaging each other whereby the slot-shaped space is formed by inserting the laundry between the clamping elements (19, 21, 28, 32).

3. Rack according to claim 1 or 2, **characterized in that** the free ends (27, 40) of the adjacent clamping elements (19, 21, 28, 32) are slightly bent apart in order to form a widened in-feed part of the slot-shaped space.

4. Rack according to anyone of the preceding claims 1 - 3, **characterized in that** each pair of adjacent clamping elements is provided with at least one spring member (29, 32) pre-stressing the adjacent elements (19, 21, 28, 32) towards each other.

5. Rack according to anyone of the preceding claims 1 - 4, **characterized in that** several pairs of clamping elements (19, 21, 28, 32) are fixed to a support (5, 58, 158, 163).

6. Rack according to anyone of the preceding claims 1 - 5, **characterized in that** the pairs of clamping elements are mutually positioned forming a flat plane, the support (5, 158, 163) having an horizontal orientation.

7. Rack according to anyone of the preceding claims 1 - 6, **characterized in that** the pairs of clamping elements (32) are fixedly or swivellingly mounted to a vertically positioned support (48, 58).

8. Rack according to anyone of the preceding claims 1 - 6, **characterized in that** the adjacent clamping elements (27) of two adjacent pairs are interconnected with their free ends (135).

9. Rack according to claim 8, **characterized in that** two adjacent pairs of clamping elements (19) are interconnected by means of an connecting piece (127, 134) or an end cap (143).

10. Rack according to anyone of the preceding claims 8 - 9, **characterized in that** the interconnected clamping elements (19, 145) are oval or U-shaped.

11. Rack according to anyone of the preceding claims 1 - 10, **characterized in that** the material of the clamping elements is chosen from metal, rolled steelor plastic.

12. Rack according to anyone of the preceding claims 1 -11, **characterized in that** the rack (23) is provided with means (1, 13, 35, 52, 136, 138, 169, 175, 184, 198) for suspending the support (5, 158, 163) and the clamping elements (19, 21, 28, 32) connected therewith at a certain distance from a ground.

13. Rack according to claim 12, **characterized in that** the suspension means consists of a collapsible stand (13), comprising two essentially U-shaped frames (1) being swivelingly connected to the support (5, 158, 163) and/or the clamping elements (19, 21, 28, 32).

14. Rack according to anyone of the preceding claims 4 - 13, **characterized in that** for each pair of clamping elements or each interconnected adjacent clamping elements near the first end(s) and near the support (158) a first spring member (162) is provided and furthermore near the second outer end(s) the rack is provided with a second spring element (180).

15. Rack according to claim 14, **characterized in that** the second spring member (180) is formed by U-shaped frame (169) pre-stressing a set of interconnected clamping elements.

16. Rack according to anyone of the preceding claims 1 -15, **characterized in that** at least a portion of at least one of the engaging adjacent clamping elements is provided with a soft, flexible material.

17. Rack according to anyone of the preceding claims 4 -16, **characterized in that** one or more spring members are formed by a portion of flexible material.

18. Rack according to anyone of the preceding claims 1 -17, **characterized in that** the engaging parts of the clamping elements (145, 153) are provided with outwardly protruding portions, bendings, rims (147) or ribs (146) and/or spaces (148) corresponding therewith to prevent disengagement of the elements (145, 153) and enhance clamping of the clothing or garments.

19. Rack according to anyone of the preceding claim 18, **characterized in that** the clamping elements (153) are provided with staggered ribs (146) or rims (147) whereby longitudinal rib portions alternate on the engaging surface of the clamping elements.

20. Rack according to anyone of the preceding claims 1 -19, **characterized in that** the clamping elements are connected to the support by means of snap el-

ements.

21. Rack according to anyone of the preceding claims 1 - 20, **characterized in that** the one or more clamping elements are provided with a connecting piece (176) provided with hanging means (177) like a ball for suspending or hanging out clothing.

22. Rack according to anyone of the preceding claims 1 - 21, **characterized in that** the support (5, 6) extends essentially parallel or diagonal to the swivel axle (4) between the legs (13) of the U-shaped frames (1) and the clamping elements (28) are extending essentially diagonally or parallelly respectively with respect to the swivel axle (4) of the stand (13).

23. Rack according to anyone of the preceding claims 1 - 22, **characterized in that** means for fixing the supports in folded and/or unfolded position are chosen from: a couple of hook-shaped suspension elements (43); a telescopically extending clamping bar (136, 138) and a mounting plate (44); the hook-shaped suspension elements optionally extending parallely with respect to the support.

24. Rack according to anyone of the preceding claims 1 - 23, **characterized in that** the clamping elements are mounted to one or more supports, the supports optional being mutually different; furthermore the supports being connected to the suspension elements by various, optionally different, means or methods.

Patentansprüche

1. Gestell zum Trocknen von Kleidung, insbesondere Wäsche oder Handtücher, **gekennzeichnet durch** mindestens ein Paar vorwiegend parallel verlaufende, längliche, zusammen passenden Klemmelemente (19.21.28,32,40), von denen jeweils ein Ende (20) an einer Stütze (5,6,158,163) befestigt ist, wobei die zusammen passenden Klemmelemente miteinander einen engen Schlitz zum Festklemmen der Wäsche bilden.

2. Gestell nach Anspruch 1, wobei die anderen Enden der Klemmelemente frei sind und wobei, vorzugsweise, die freien Enden des zusammen passende Klemmelements von diesem oder jedem Paar etwas auseinander gebogen sind, um ein breiteres Einführteil des Schlitzes zu bilden.

3. Gestell nach Anspruch 1 oder 2, **dadurch gekennzeichnet, dass** die zusammen passenden Klemmelemente jedes Paares als zueinander vorgespannte Federn gebildet sind, wobei, vorzugsweise, das Gestell mit Federn zum Verbessern der federnden Qualitäten der zusammen passenden Klemmelemente versehen ist.

4. Gestell nach einem der oben erwähnten Ansprüche, **dadurch gekennzeichnet, dass** mehrere Klemmelementpaare (19.21.28,32,40) an der Stütze befestigt sind.

5. Gestell nach Anspruch 4, **dadurch gekennzeichnet, dass** die Klemmelementpaare in einer vorwiegend waagerechten Ebene angeordnet sind und die Klemmelemente von aneinander angrenzenden Paaren miteinander verbunden sind, wobei die miteinander verbundenen Klemmelemente der aneinander angrenzenden Paare vorzugsweise alle eine U-Form bilden, von der die Unterseite von der Stütze abgewendet ist.

6. Gestell nach Anspruch 5, **dadurch gekennzeichnet, dass** die aneinander angrenzenden Klemmelemente in der Mitte und am anderen Ende mittels eines Verbindungsteils mit einander verbunden sind (127,134).

7. Gestell nach Anspruch 4, **dadurch gekennzeichnet, dass** die Klemmelementpaare in einer vorwiegend waagerechten Ebene angeordnet sind und an der Stütze entlang bewegbar sind.

8. Gestell nach Anspruch 4, **dadurch gekennzeichnet, dass** die Klemmelementpaare in einer vorwiegend senkrechten Ebene angeordnet sind und schwenkbar mit der Stütze verbunden sind.

9. Gestell nach einem der oben erwähnten Ansprüche, **dadurch gekennzeichnet, dass** die Klemmelemente aus Gewindestahl, Walzstahl, Metall oder Plastik hergestellt sind.

10. Gestell nach einem der oben erwähnten Ansprüche, **gekennzeichnet durch** Trägermittel um die Stütze und die daran befestigten Klemmelemente in einem bestimmten Abstand zu einem Boden zu tragen.

11. Gestell nach Anspruch 10, **dadurch gekennzeichnet, dass** die Trägermittel wie ein Klappständer geformt sind, der zwei vorwiegend U-förmige Bügeln, die schwenkbar mit einer Achse an den freien Enden der U-förmigen Bügeln verbunden sind, umfasst.

12. Gestell nach Anspruch 11, **dadurch gekennzeichnet, dass** die Stütze sich vorwiegend parallel zur Schwenkachse, zwischen den Beinen der U-förmigen Bügeln, erstreckt und dass die Klemmelemente vorwiegend diagonal zur Schwenkachse des Ständers ausgerichtet sind.

13. Gestell nach Anspruch 11, das sich **dadurch kenn-**

zeichnet, dass die Stütze vorwiegend diagonal und die Klemmelemente vorwiegend parallel zur Schwenkachse des Ständers hin ausgerichtet sind.

14. Gestell nach den Ansprüchen 10 bis 13, **gekennzeichnet durch** mehrere Stützen mit Klemmelementen, die an Verschiedenen Stellen mit dem Ständer verbunden sind, wobei vorzugsweise Stützen auf beiden Seiten der Schwenkachse des Ständers montiert sind.

15. Gestell nach Anspruch 14, **dadurch gekennzeichnet, dass** Stützen auf verschiedenen Ebenen an den U-förmigen Bügeln entlang montiert sind.

16. Gestell nach einem der Ansprüche 10 bis 15, **dadurch gekennzeichnet, dass** die Stütze(n) zusammenklappbar mit dem Ständer verbunden ist (sind), wobei das Gestell vorzugsweise mit Mitteln um die Stützen in ausgeklapptem Zustand zu fixieren, versehen ist.

17. Gestell nach Anspruch 10, wobei die Trägermittel einige hakenförmigen Aufhängmittel umfassen, wobei die Stütze sich vorzugsweise zwischen den hakenförmigen Aufhängmitteln erstreckt und die Klemmelemente sich vorwiegend parallel zu den hakenförmigen Aufhängmitteln verengen.

18. Gestell nach Anspruch 19, **dadurch gekennzeichnet, dass** die Stütze mit einem der hakenförmigen Aufhängelemente verbunden ist und das andere Aufhängelement mit einem Ende eines Klemmelements verbunden ist.

19. Gestell nach den Ansprüchen 17 bis 18, **dadurch gekennzeichnet, dass** die hakenförmigen Aufhängelemente vorwiegend in derselben Ebene wie die Klemmelemente angeordnet sind.

20. Gestell nach Anspruch 11, **dadurch gekennzeichnet, dass** die U-förmigen Bügeln über federnde Eigenschaften verfügen, wobei die freien Enden der U-förmigen Bügeln gegen die äußeren Klemmelemente gedrückt werden.

21. Gestell nach einer der vorangegangenen Ansprüche, **dadurch gekennzeichnet, dass** die Klemmelemente U-förmig sind und mit einem Schnappsystem montiert werden in einer solchen Weise, dass sie mit einer Bewegung an die Stütze gekoppelt werden können.

22. Gestell nach Anspruch 10, **dadurch gekennzeichnet, dass** die Trägermittel mindestens eine teleskopisch verstellbare Klemmstange umfassen, in der die Stütze vorzugsweise mit mindestens einer Klemmstange integriert wurde, oder **dadurch gekennzeichnet, dass** zwei Stützen Rücken an Rükken miteinander verbunden sind in einer solchen Weise, dass die daran montierten Klemmelemente sich hauptsächlich in entgegengesetzten Richtungen in einer gemeinsamen Ebene erstrecken und die Trägermittel durch mindestens zwei, jeweils mit den Klemmelementen auf einer Seite der Stütze verbunden, U-förmige Bügeln gebildet werden.

23. Gestell nach Anspruch 10, **dadurch gekennzeichnet, dass** die Trägermittel eine Befestigungsplatte, die an einer Wand befestigt werden soll, umfassen, die eine vorzugsweise vertikale Achse, um die sich das oder jedes Klemmelementpaar schwenkt, bestimmt.

24. Gestell nach Anspruch 10, **dadurch gekennzeichnet, dass** die Trägermittel eine rohrförmige Stütze, an der eine Anzahl von Stützen montiert ist, die rundum verteilt sind, umfassen.

Revendications

1. Séchoir pour faire sécher des vêtements, en particulier du linge et des serviettes, **caractérisé par** au moins une paire d'éléments de serrage d'appariement, allongés et principalement parallèles (19.21.28,32,40) ; une extrémité (20) de chaque paire d'éléments est fixée à un support (5,6,158,163) et ces éléments de serrage d'appariement forment un espace intérieur étroit, comme une fente, pour pincer le linge.

2. Séchoir conformément au claim 1, où les autres extrémités des éléments de serrage sont libres et où, de préférence, les autres extrémités libres des éléments de serrage d'appariement, de cette paire ou de toute autre paire, sont légèrement courbées afin de former une partie élargie pour introduire le linge dans l'espace-fente.

3. Séchoir conformément au claim 1 ou 2, **caractérisé par le fait que** les éléments de serrage d'appariement de chaque paire sont tendus l'un vers l'autre comme des ressorts ; le séchoir est, de préférence, équipé de ressorts afin d'améliorer les qualités élastiques des éléments de serrage d'appariement.

4. Séchoir conformément à l'un des claims décrits ci-dessus, **caractérisé par le fait que** plusieurs paires d'éléments de serrage (19.21.28,32) sont fixées au support.

5. Séchoir conformément au claim 4, **caractérisé par le fait que** les paires des éléments de serrage d'd'appariement sont placées sur un plan commun principalement horizontal et que les éléments de ser-

rage des paires voisines sont reliés ; de préférence, les éléments de serrage reliés des paires voisines ont toutes, principalement, la forme d'un U dont le bas est détourné du support.

6. Séchoir conformément au claim 5, **caractérisé par le fait que** les deux éléments de serrage voisins sont reliés, à leur milieu et à leur autre extrémité, par une pièce de jonction (127,134).

7. Séchoir conformément au claim 4, **caractérisé par le fait que** les paires d'éléments de serrage sont situées sur un plan commun principalement horizontal et sont mobiles le long du support.

8. Séchoir conformément au claim 4, **caractérisé par le fait que** les paires d'éléments de serrage sont situées sur un plan commun principalement vertical et qu'elles sont montées de telle sorte qu'elles pivotent autour du support.

9. Séchoir conformément à l'un des claims décrits ci-dessus, **caractérisé par le fait que** les éléments de serrage sont fabriqués en tige filetée en acier, en acier laminé, en métal ou en plastique.

10. Séchoir conformément à l'un des claims décrits ci-dessus, **caractérisé par** les moyens pour accrocher le support et les éléments de serrage, lesquels sont montés au support à une certaine distance du sol.

11. Séchoir conformément au claim 10, **caractérisé par le fait que** les moyens de soutien sont formés comme un support pliant et comprennent deux cadres principalement en forme de U, lesquels sont montés de telle sorte qu'ils pivotent autour d'un axe, aux extrémités libres des pieds des cadres en forme de U.

12. Séchoir conformément au claim 11, **caractérisé par le fait que** le support s'étire principalement parallèlement à l'axe pivotant, entre les pieds des cadres en forme de U, et les éléments de serrage sont principalement dirigés diagonalement vers l'axe pivotant de la base.

13. Séchoir conformément au claim 11, **caractérisé par le fait que** le support s'étire principalement diagonalement à l'axe pivotant de la base, et que les éléments de serrage sont dirigés principalement parallèlement à cet axe pivotant.

14. Séchoir conformément à l'un des claims de 10 à 13, **caractérisé par** plusieurs supports avec éléments de serrage, reliés à la base en plusieurs endroits ; de préférence, des supports ont été adaptés de chaque côté de l'axe pivotant de la base.

15. Séchoir conformément au claim 14, **caractérisé par le fait que** des supports ont été adaptés à plusieurs niveaux le long des cadres en forme de U.

16. Séchoir conformément à l'un des claims de 10 à 15, **caractérisé par le fait que** le(s) support(s) est ou sont relié(s) à la base en position pliée ; de préférence, il est équipé de moyens pour fixer les supports en position dépliée.

17. Séchoir conformément au claim 10, où les moyens de fixation comprennent quelques éléments de fixation en forme de crochet ; de préférence, le support s'étire entre les éléments de fixation en forme de crochet, et les éléments de serrage rétrécissent surtout parallèlement aux éléments de fixation en forme de crochet.

18. Séchoir conformément au claim 19, **caractérisé par le fait que** le support est relié à l'un des éléments de fixation en forme de crochet, et que l'autre élément de fixation est relié à l'extrémité d'un élément de serrage.

19. Séchoir conformément au claim 17 ou 18, **caractérisé par le fait que** les éléments de fixation en forme de crochet se trouvent principalement sur le même niveau que les éléments de serrage.

20. Séchoir conformément au claim 11, **caractérisé par le fait que** les cadres en forme de U ont des qualités élastiques ; les extrémités libres du cadre en forme de U appuient contre les éléments de serrage extérieurs.

21. Séchoir conformément à l'un des claims précédents, **caractérisé par le fait que** les éléments de serrage sont en forme de U et qu'ils s'adaptent avec un système de clic-clac de telle manière qu'on peut les attacher au support en un seul mouvement.

22. Séchoir conformément au claim 10, **caractérisé par le fait que** le moyen de fixation comprend au moins un barreau de serrage avec allongement télescopique ; de préférence, le support a été intégré avec au moins un barreau de serrage, ou bien le séchoir est **caractérisé par le fait que** les deux supports sont reliés dos à dos, de telle manière que les éléments de serrage rattachés à eux, s'allongent principalement en direction opposée sur un niveau commun, et que les moyens de fixation sont formés par au moins deux cadres principalement en forme de U, chacun étant relié aux éléments de serrage sur un côté des supports.

23. Séchoir conformément au claim 10, **caractérisé par le fait que** les moyens de fixation comprennent une plaque de fixation pour le fixer à un mur, définissant un axe principalement vertical autour duquel tourne

la paire, ou chaque paire, d'éléments de serrage.

24. Séchoir conformément au claim 10, **caractérisé par le fait que** les moyens de fixation comprennent un support en forme de pipe auquel sont fixés un certain nombre de supports répartis de manière circulaire.

FIG. 1

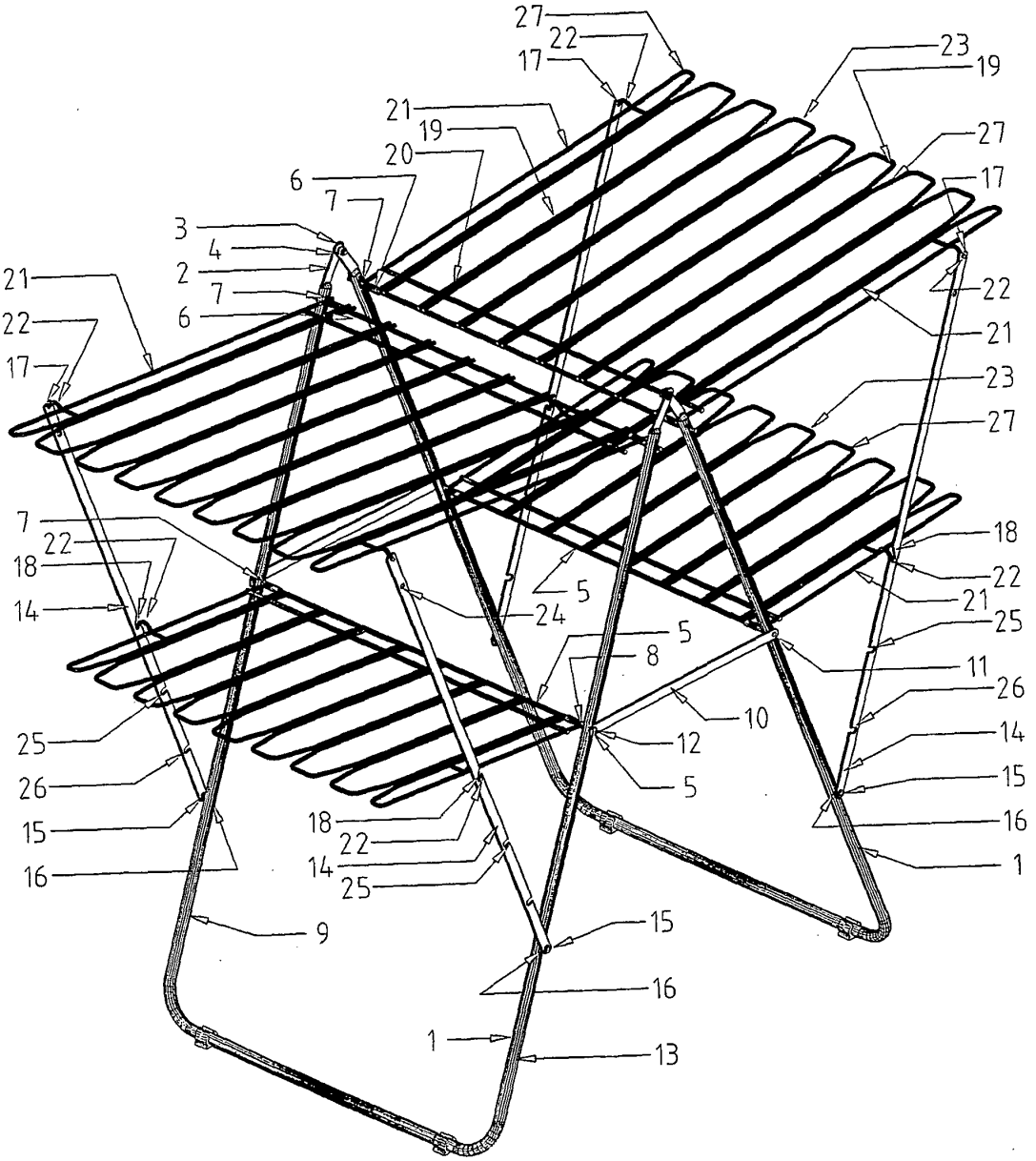
27
22
17
23
19
21
19
20
27
17
6
7
3
4
2
7
6
21
22
17
22
21
23
27
7
22
18
14
18
22
21
25
5
24
5
8
11
26
10
12
14
25
26
5
15
15
16
18
22
14
25
16
1
9
15
16
1
13

FIG. 2

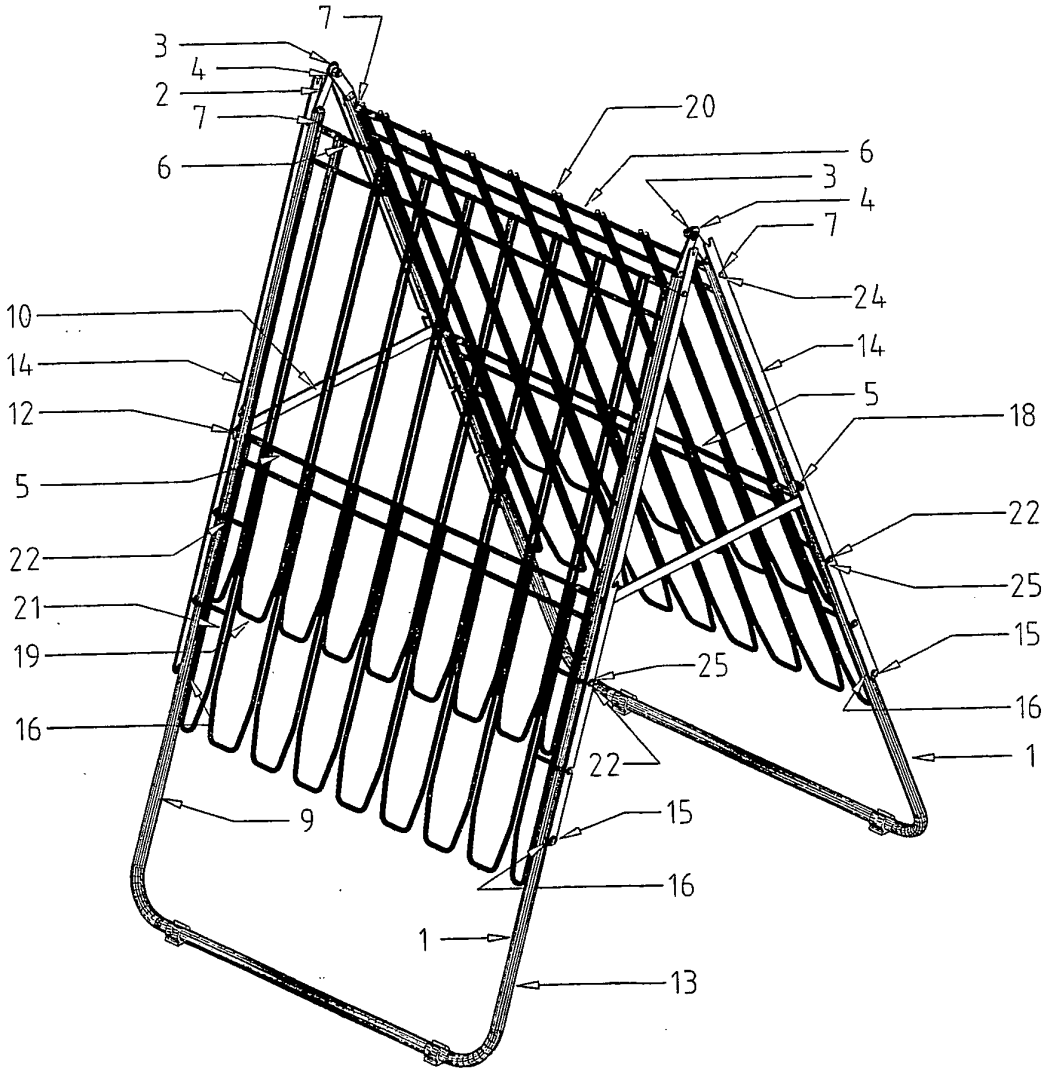
7
3
4
2
7
6
20
6
3
4
7
24
10
14
14
12
5
18
5
22
22
25
21
15
19
25
16
16
1
22
9
15
16
1
13

FIG. 3

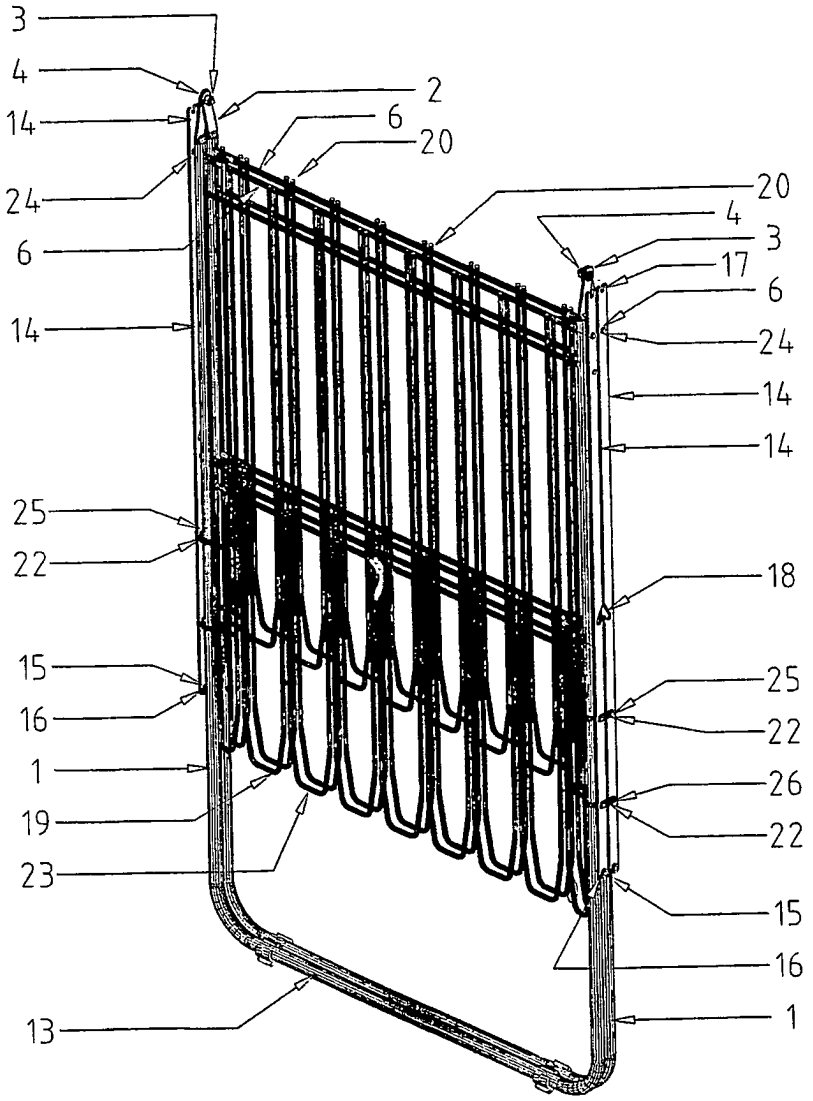
3
4
14
24
6
14
25
22
15
16
1
19
23
13
2
6
20
20
4
3
17
6
24
14
14
18
25
22
26
22
15
16
1

FIG. 4

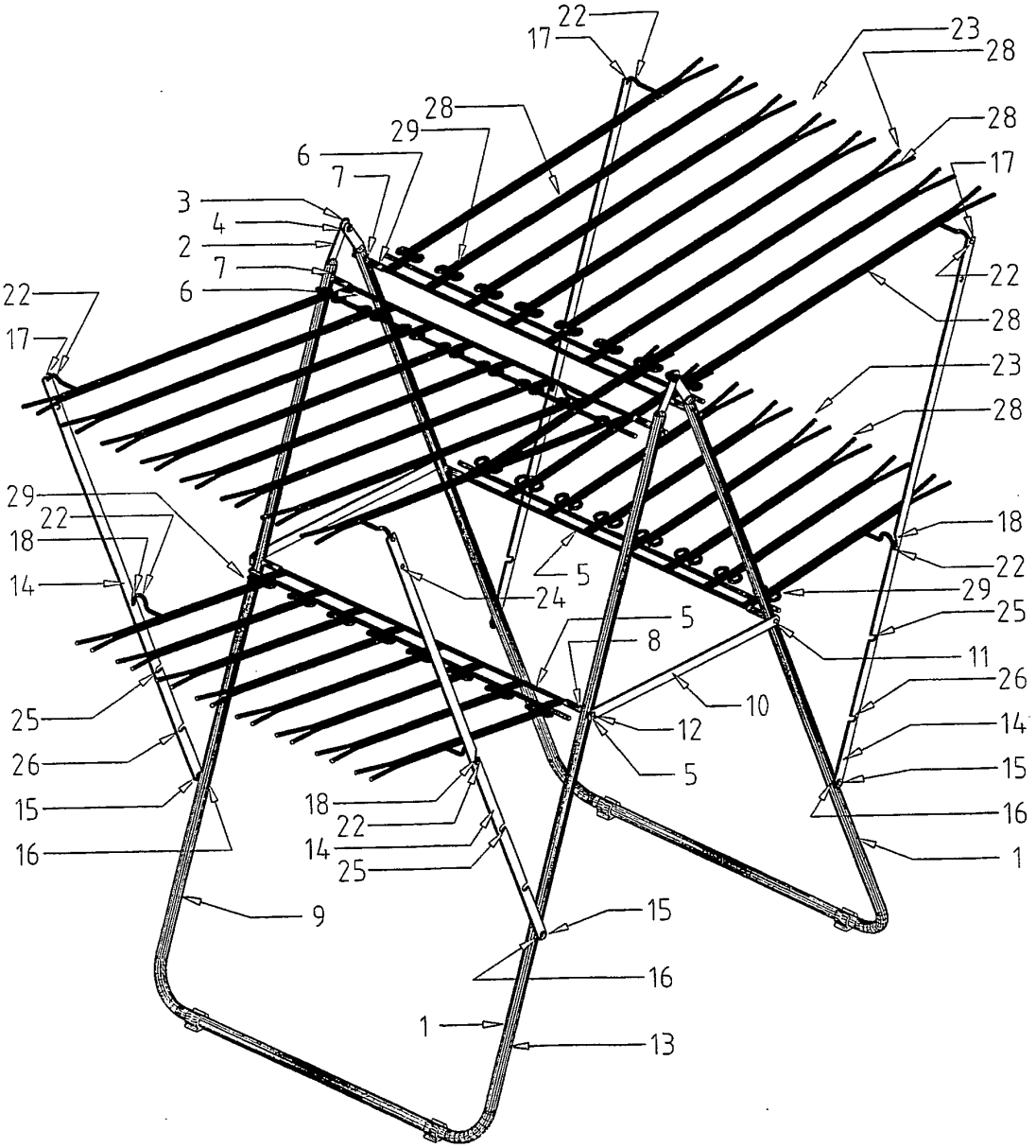
22
17
23
28
28
29
28
6
7
17
3
4
2
7
6
22
22
28
17
23
28
29
22
18
14
18
22
5
24
29
25
5
8
11
26
10
25
12
14
26
5
15
15
18
16
22
14
16
25
1
9
15
16
1
13

FIG. 5

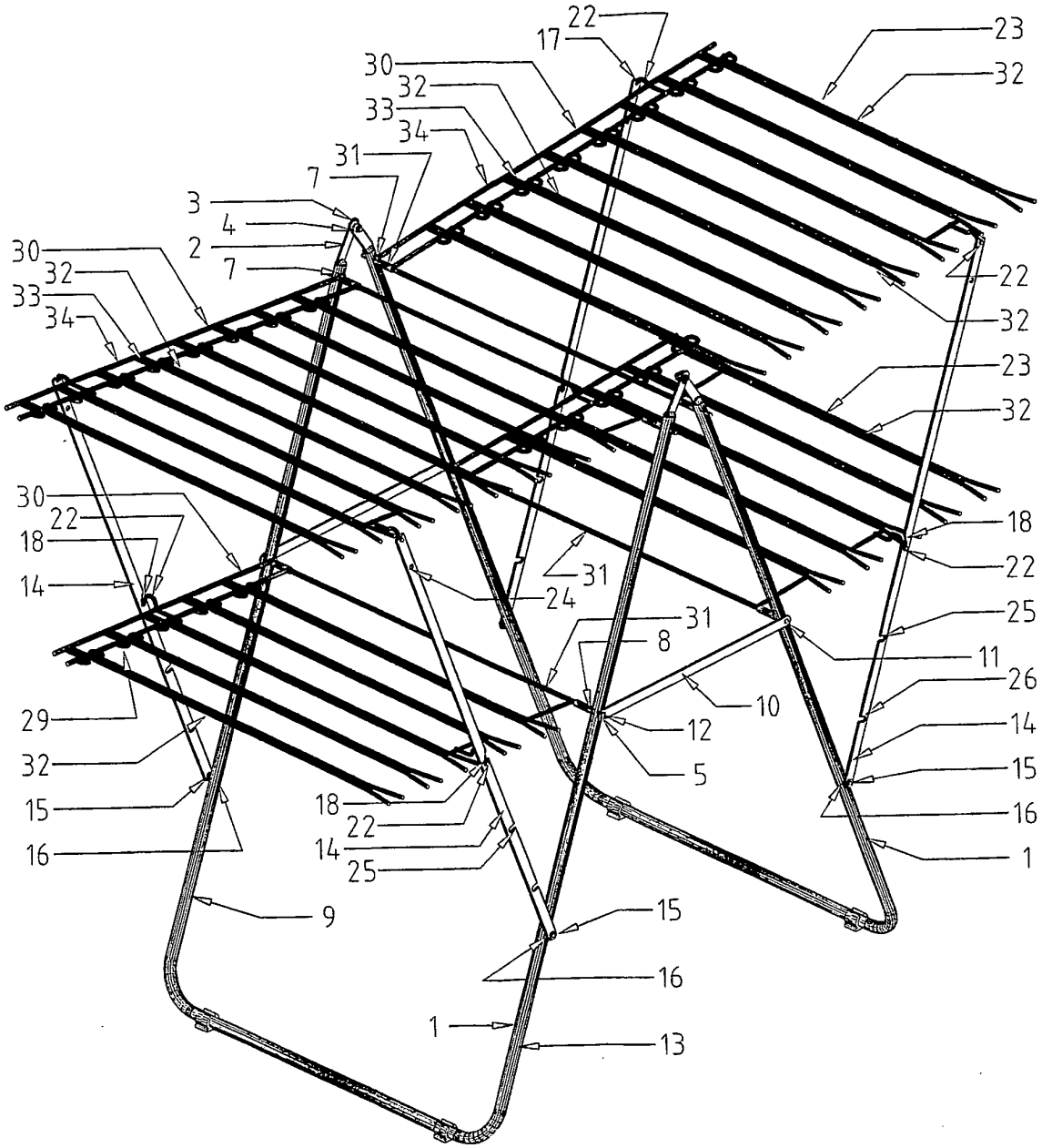
22
17
23
30
32
32
33
34
31
7
3
4
2
7
30
32
33
34
22
32
23
32
30
22
18
14
18
22
31
24
31
8
25
11
26
10
29
12
14
32
5
15
15
18
22
16
14
25
16
1
9
15
16
1
13

FIG. 6

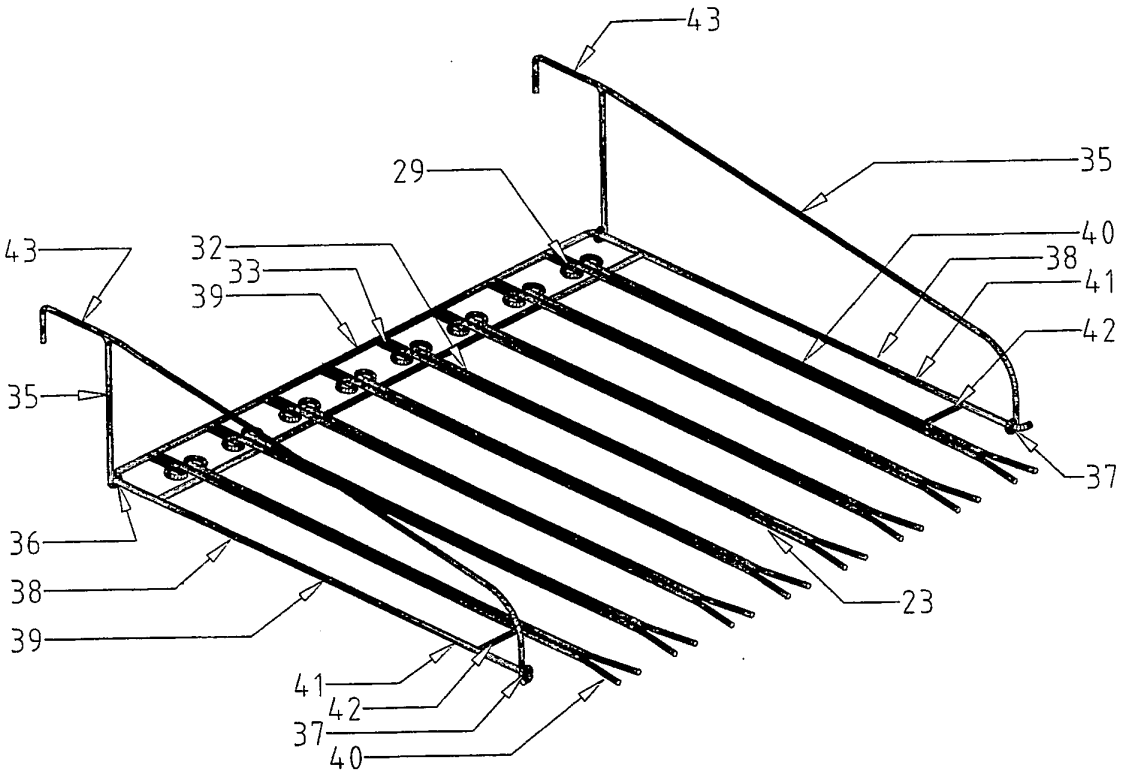

FIG. 7

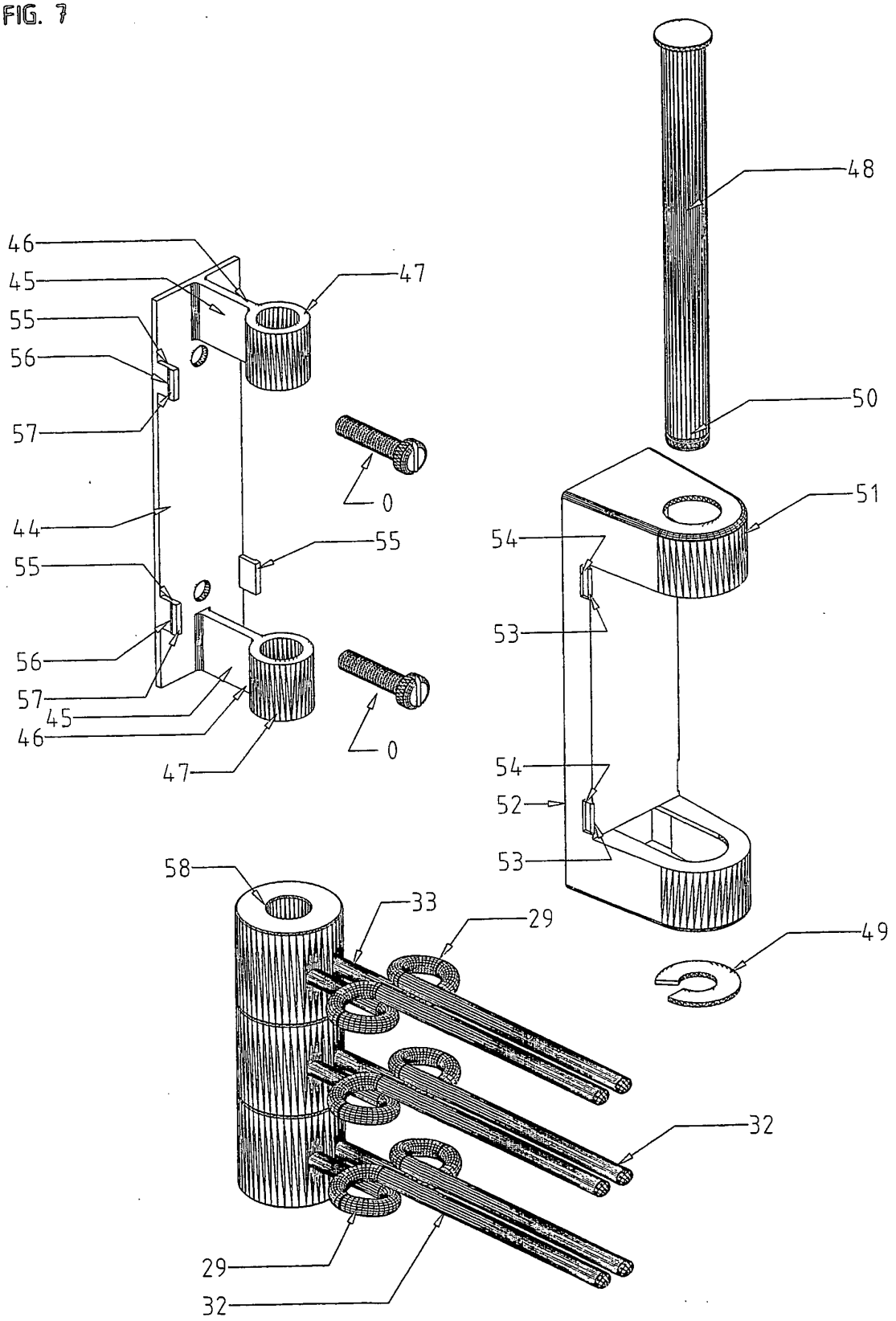
48
46
45
47
55
56
57
50
0
51
44
55
54
55
53
56
57
45
46
0
47
54
52
53
58
33
29
49
32
29
32

FIG. 8

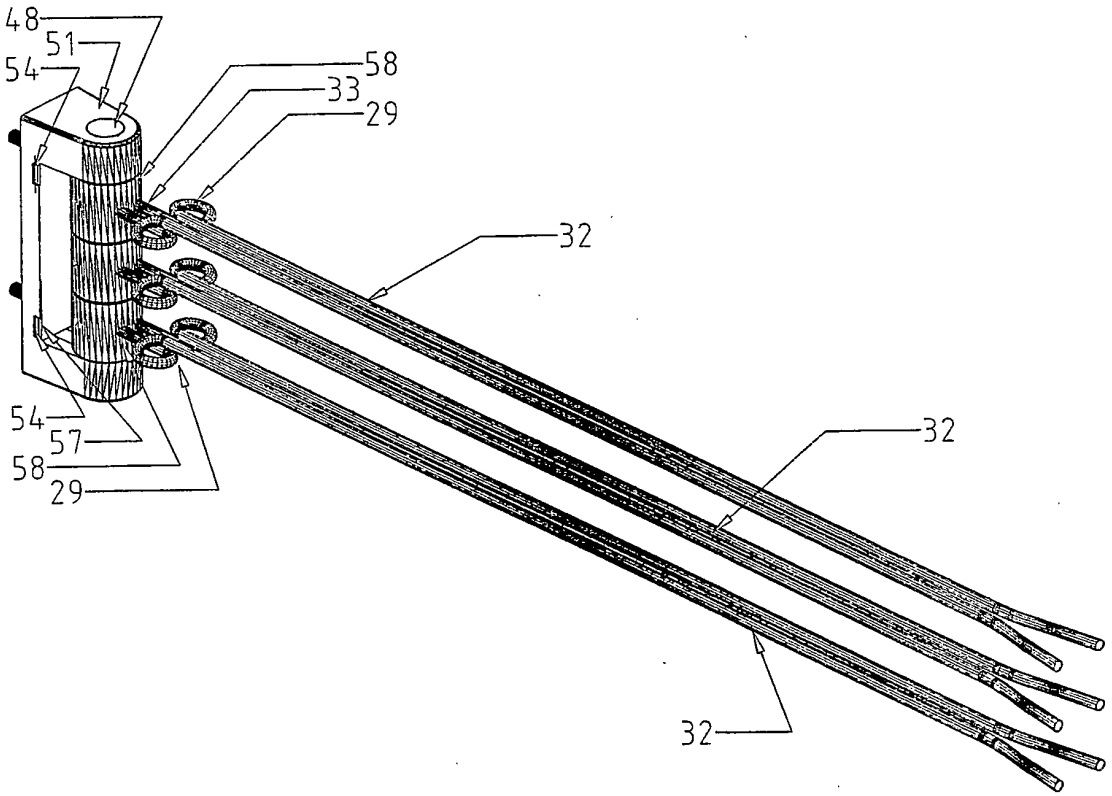

FIG. 09

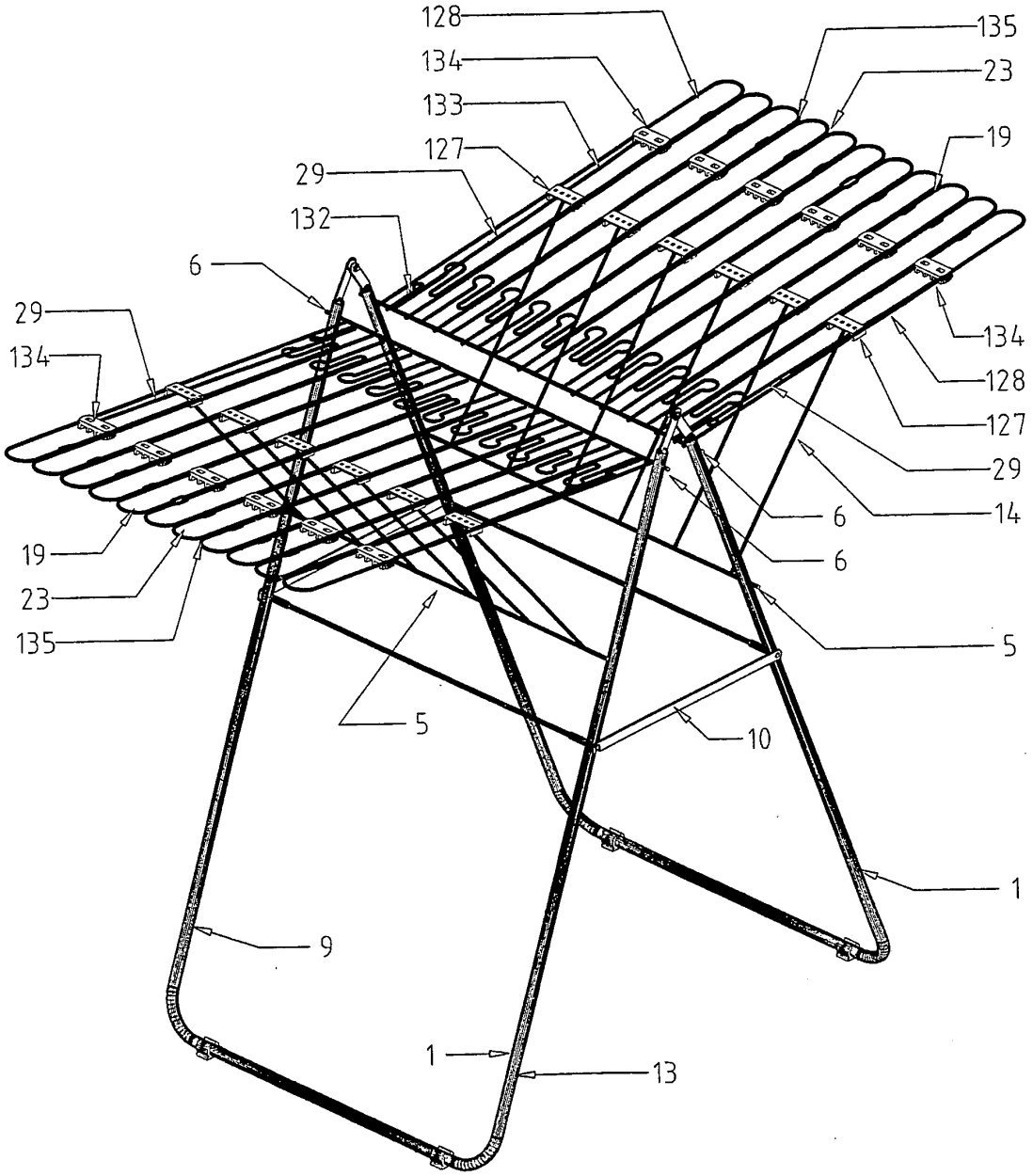
128
134
133
127
29
132
6
29
134
19
23
135
135
23
19
134
128
127
29
14
6
6
5
5
10
1
9
1
13

FIG. 10

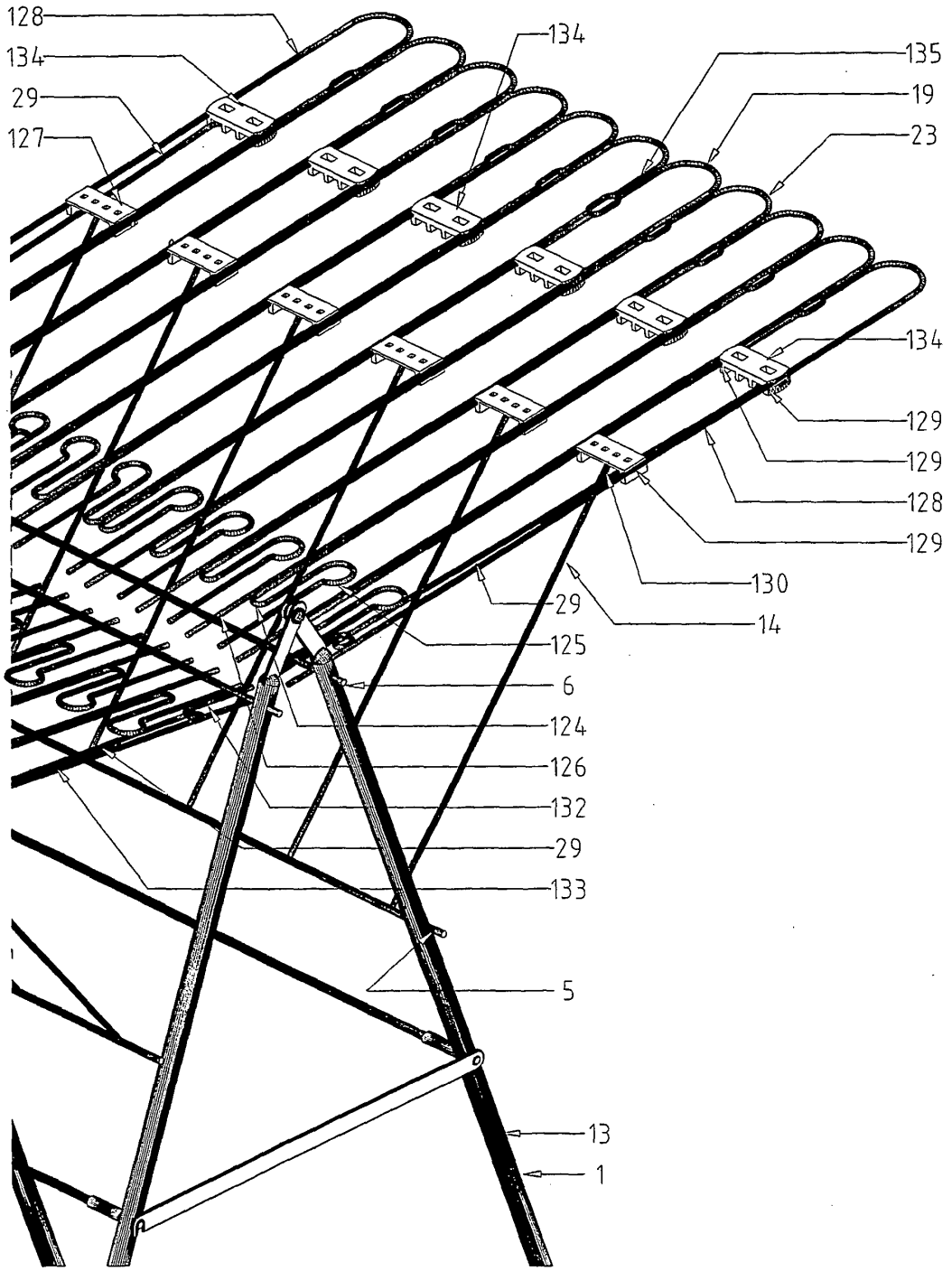
128
134
29
127
134
135
19
23
134
129
129
128
129
130
29
14
125
6
124
126
132
29
133
5
13
1

FIG. 11

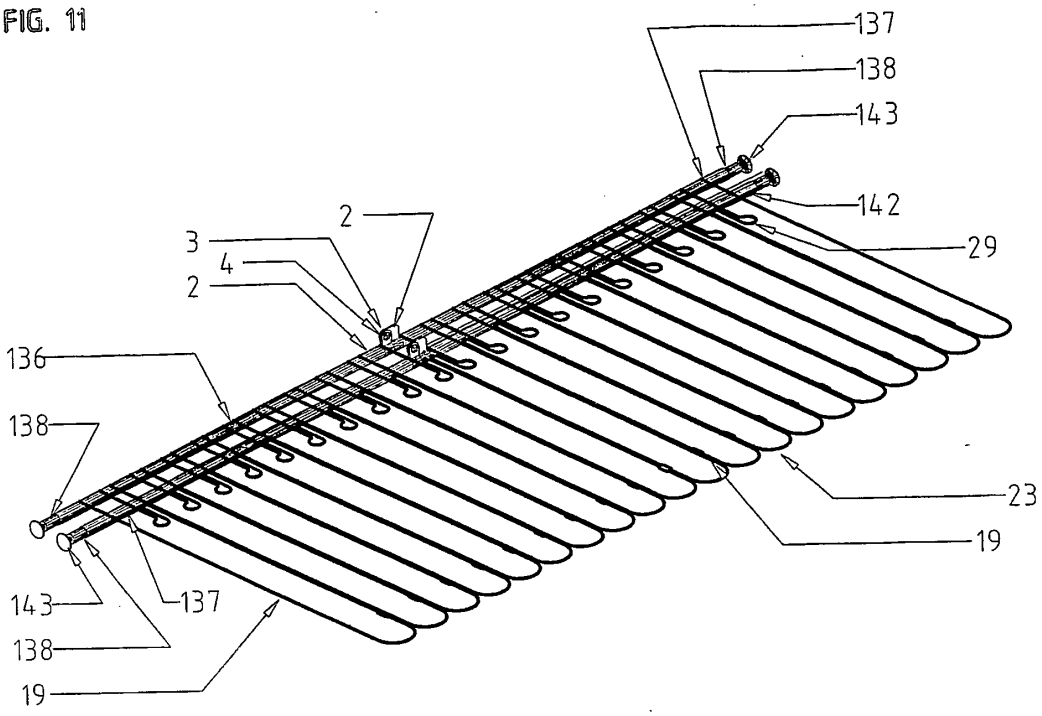
137
138
143
142
29
2
3
4
2
136
138
23
19
143
137
138
19

FIG. 12

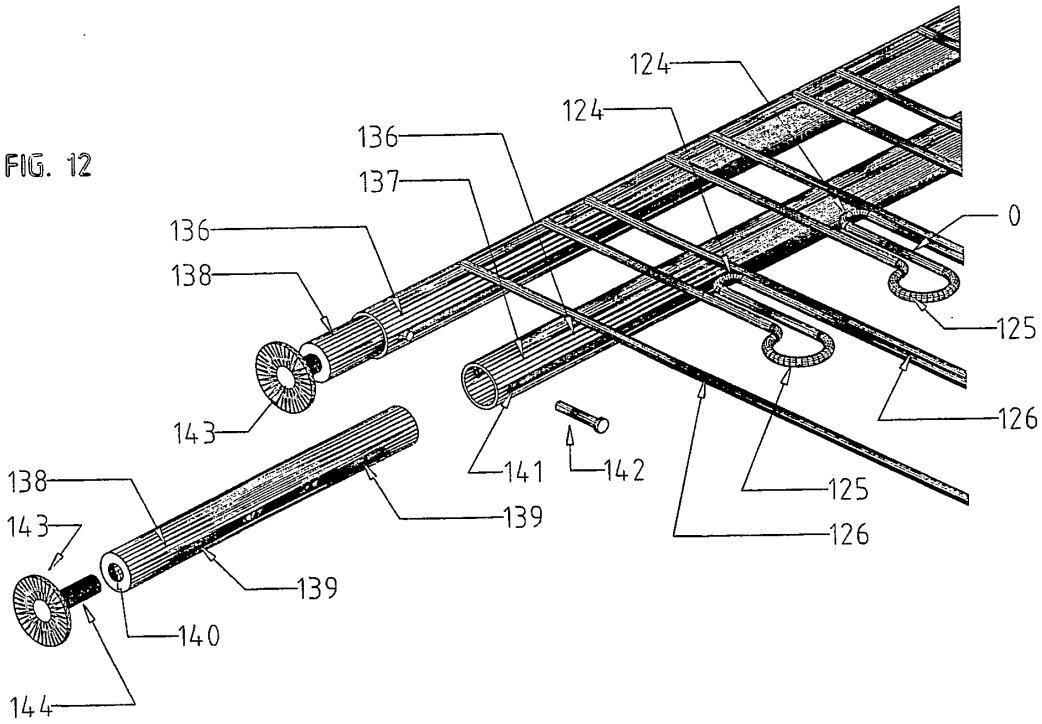
124
124
136
137
136
138
0
125
143
126
141
142
138
125
143
139
126
139
140
144

FIG. 13

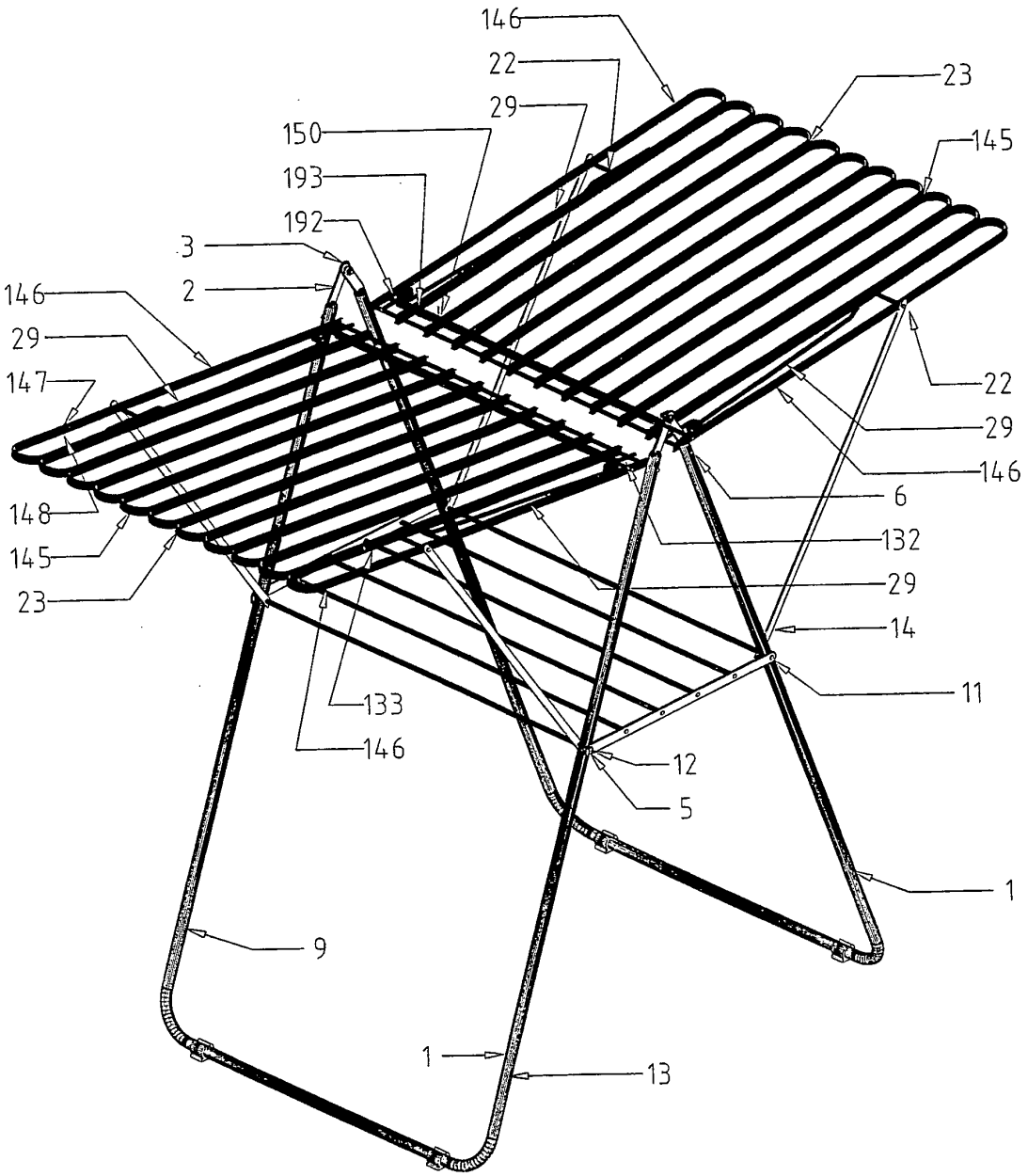
146
22
29
23
150
145
193
192
3
2
146
29
147
22
29
146
6
148
132
145
29
23
14
11
133
146
12
5
1
9
1
13

FIG. 14

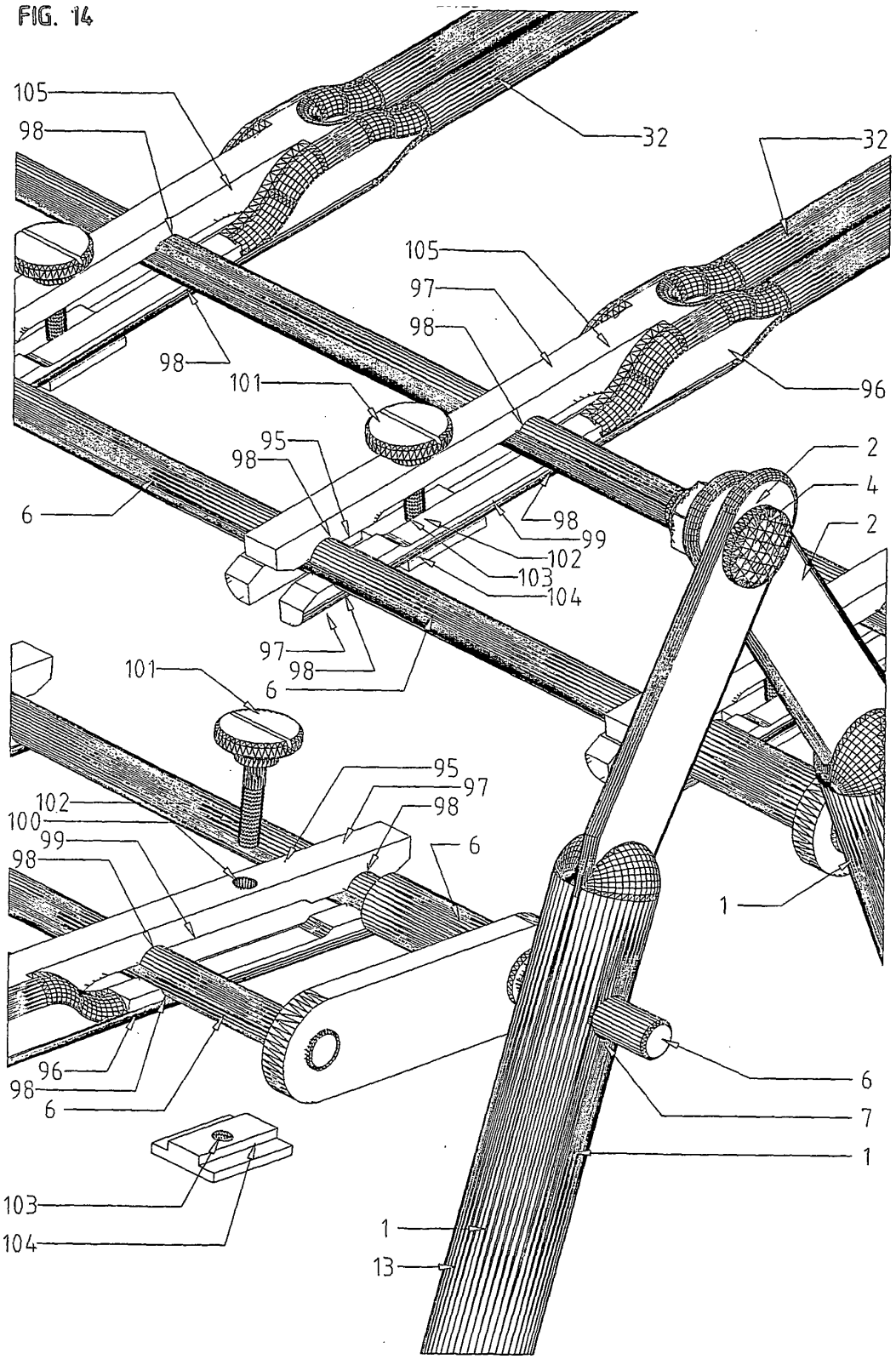
105
98
32
32
105
97
98
98
101
96
95
98
2
4
6
98
99
2
102
103
104
97
98
101
6
95
97
102
100
98
99
6
98
1
96
98
6
6
7
1
103
104
1
13

FIG. 15

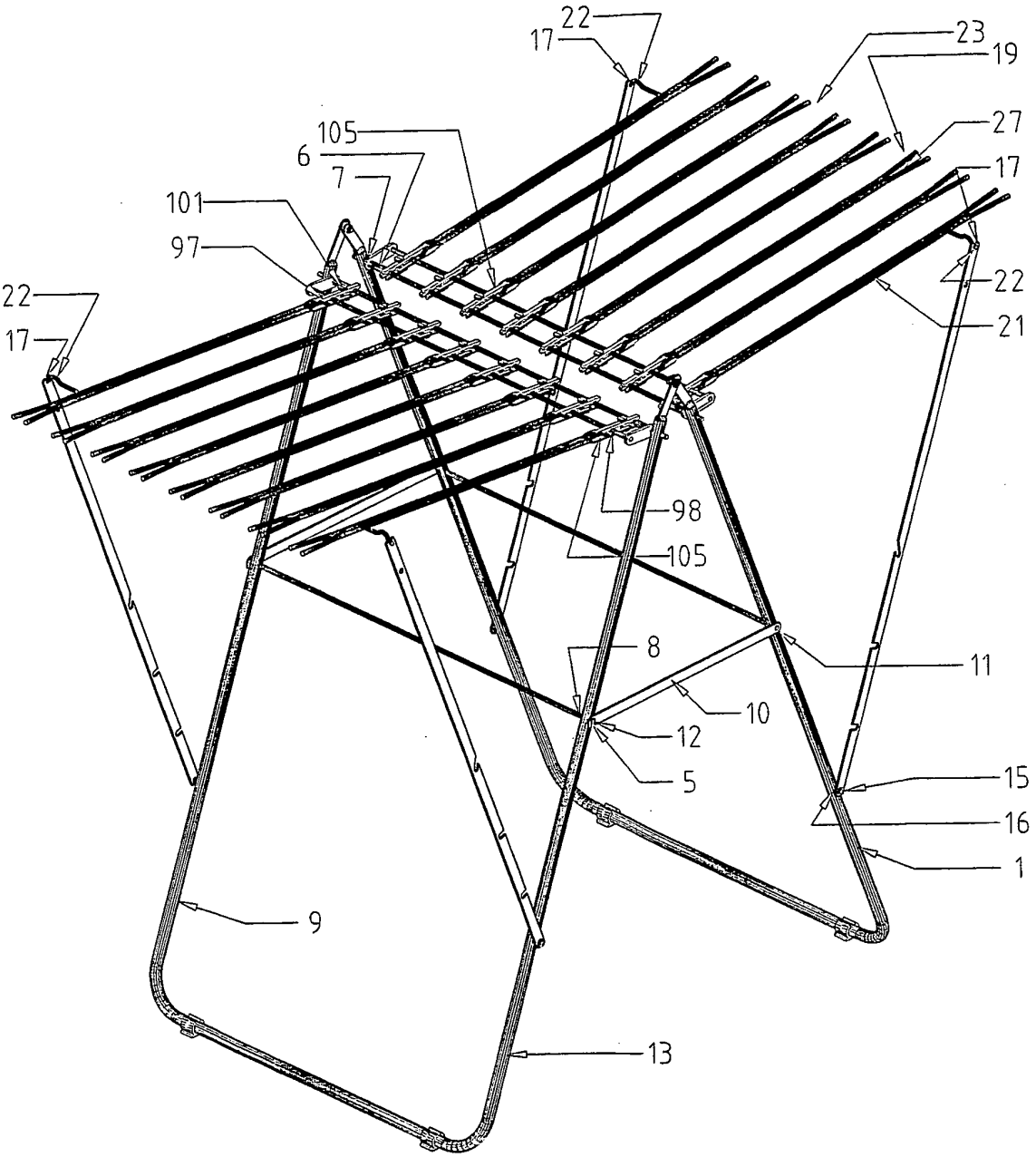
22
17
23
19
105
6
7
27
17
101
97
22
22
17
21
98
105
8
11
10
12
5
15
16
1
9
13

FIG. 16

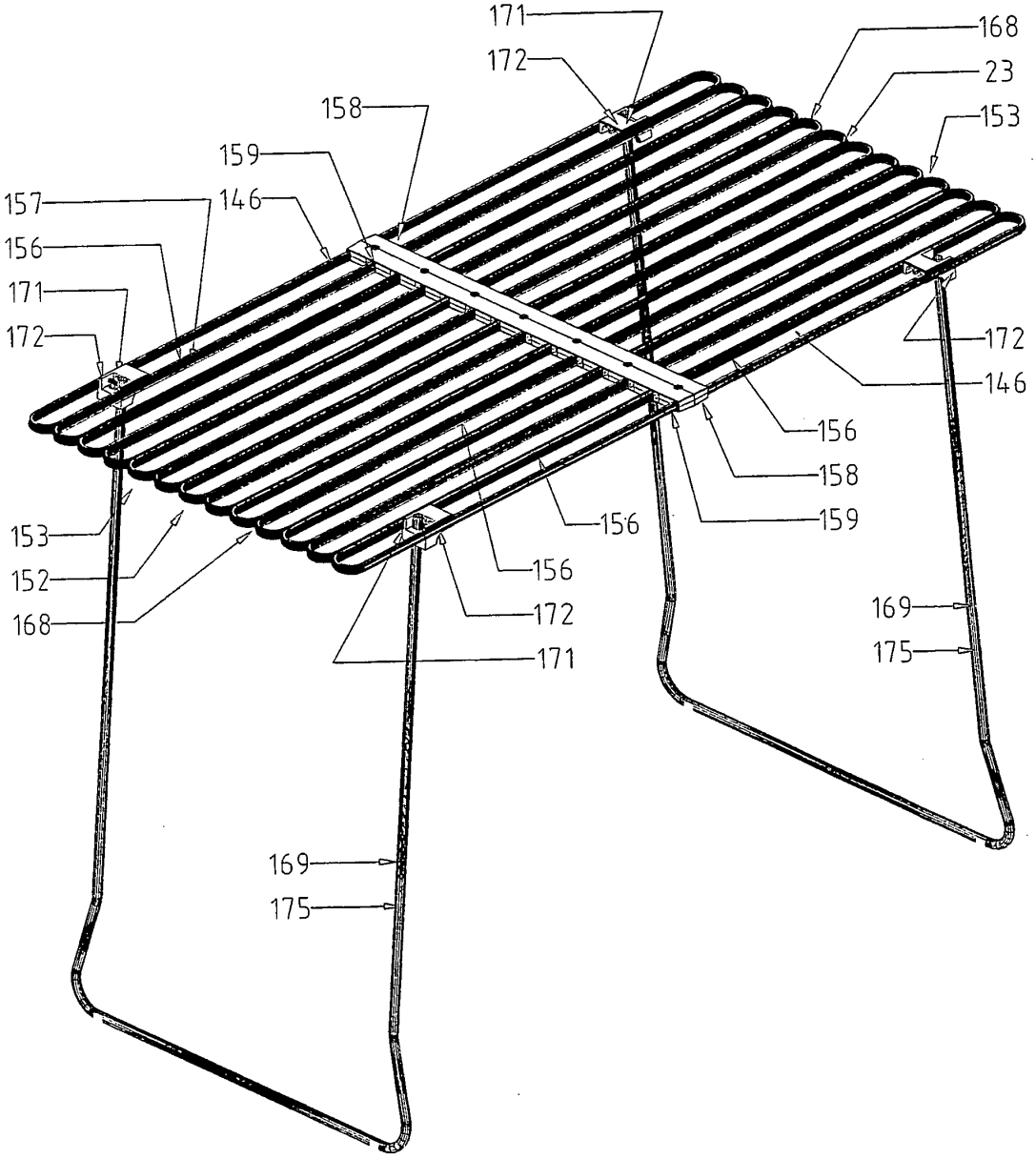
171
172
168
23
153
158
159
146
157
156
171
172
172
146
156
158
159
156
153
152
168
156
172
171
169
175
169
175

FIG. 17

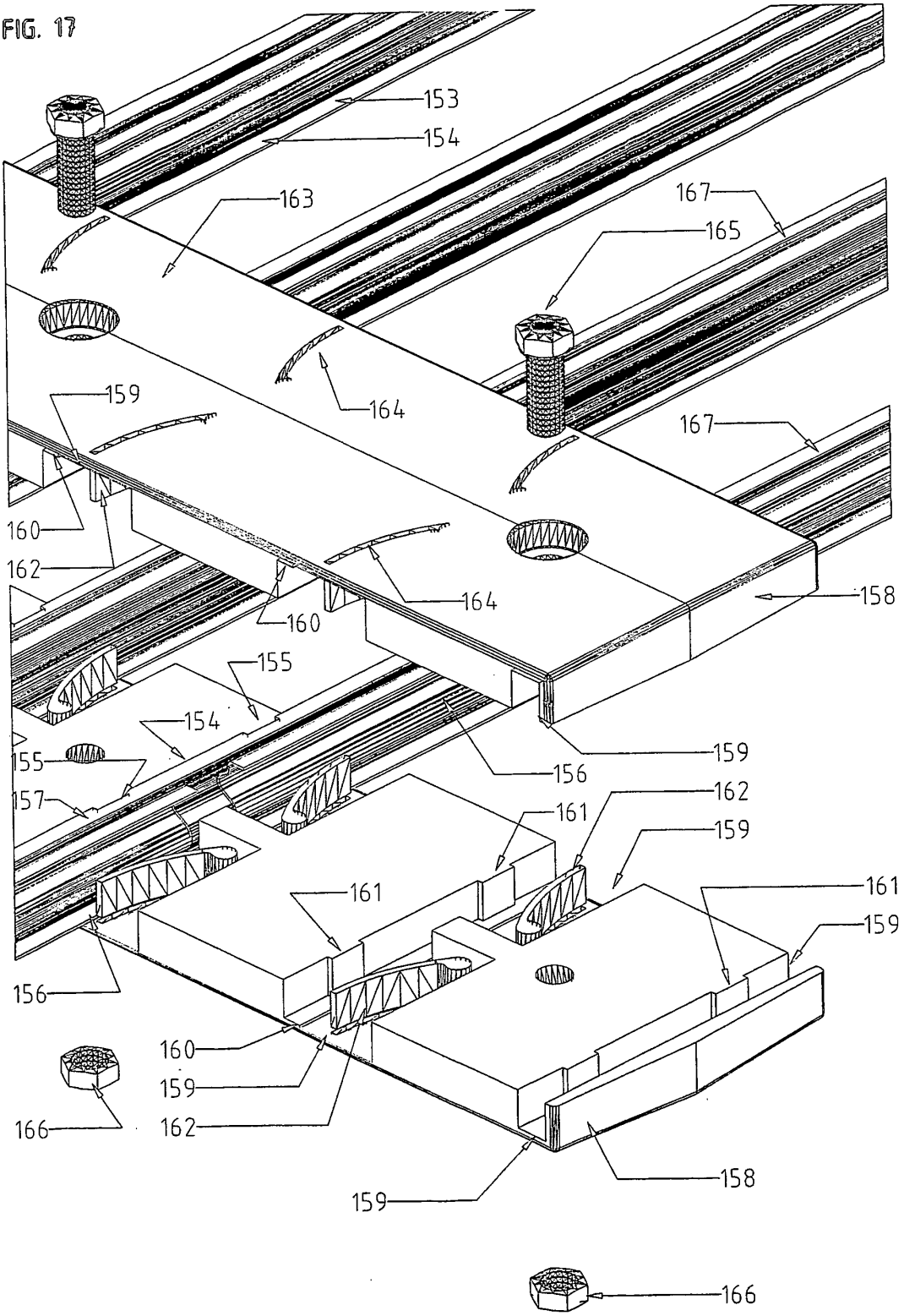
153
154
163
167
165
159
164
167
160
162
164
158
160
155
154
159
155
156
157
162
161
159
161
161
159
156
160
159
166
162
158
159
166

FIG. 18

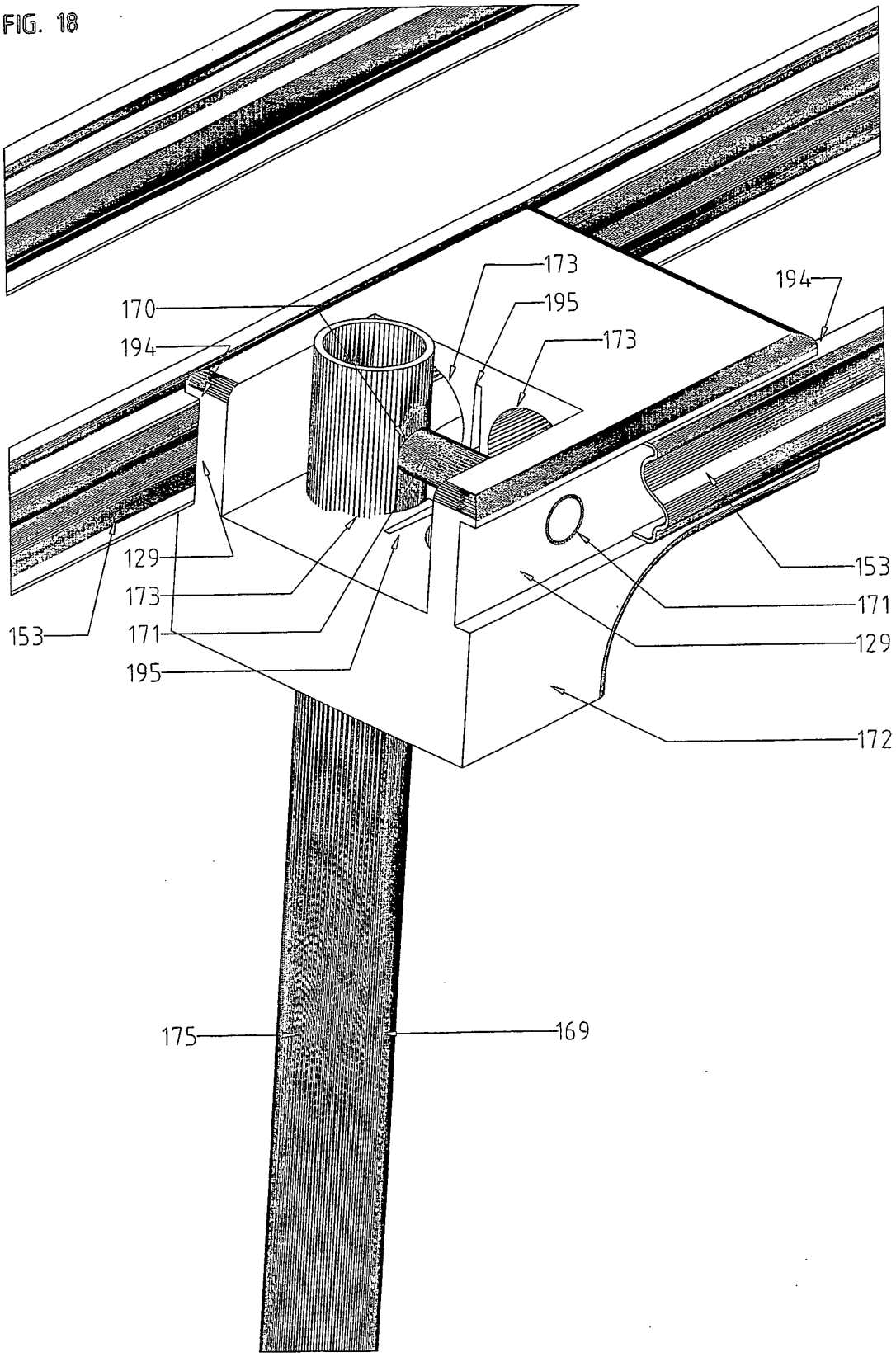
173
195
173
194
170
194
129
173
171
195
153
153
171
129
172
175
169

FIG. 19

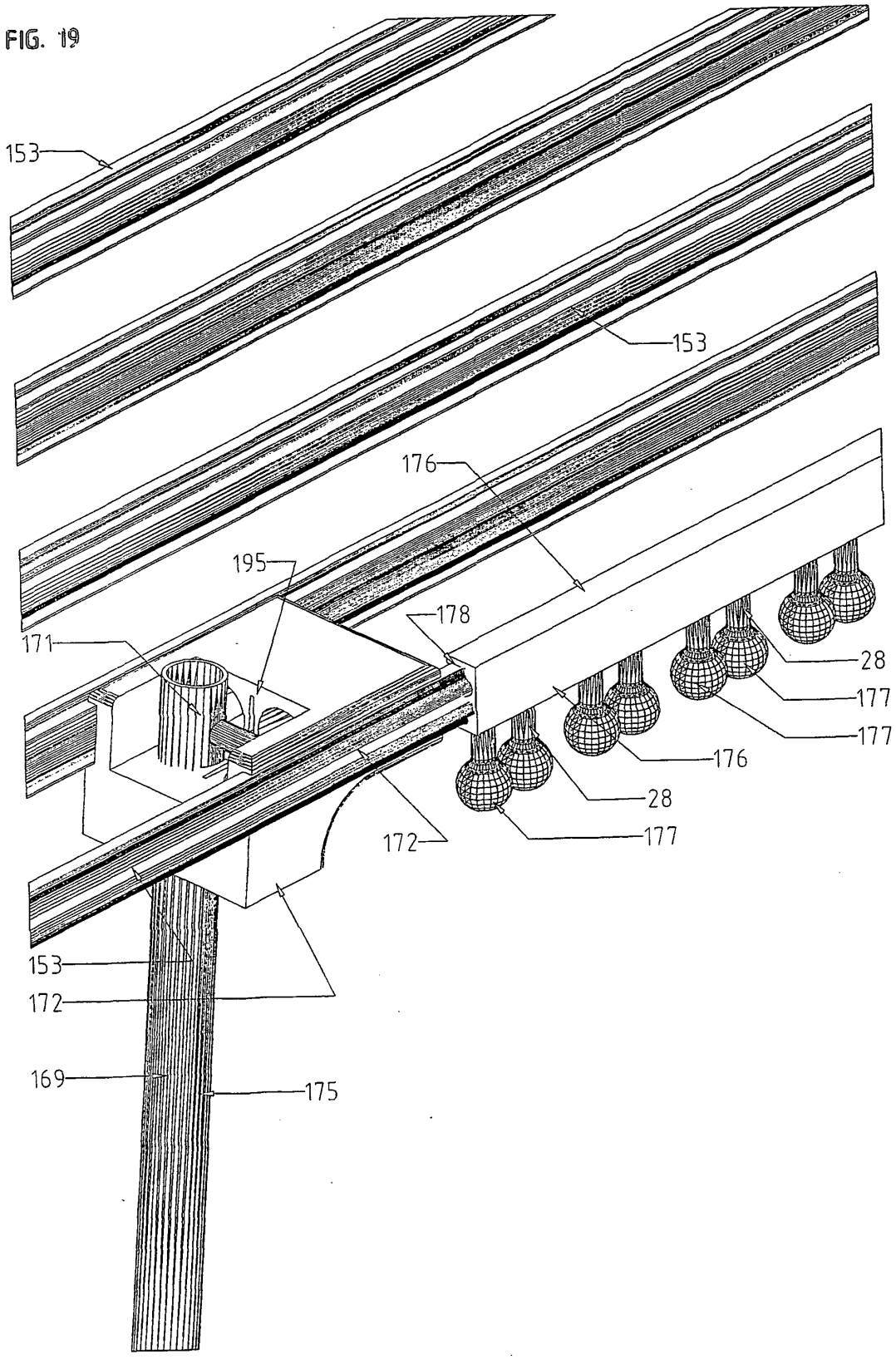

FIG. 20

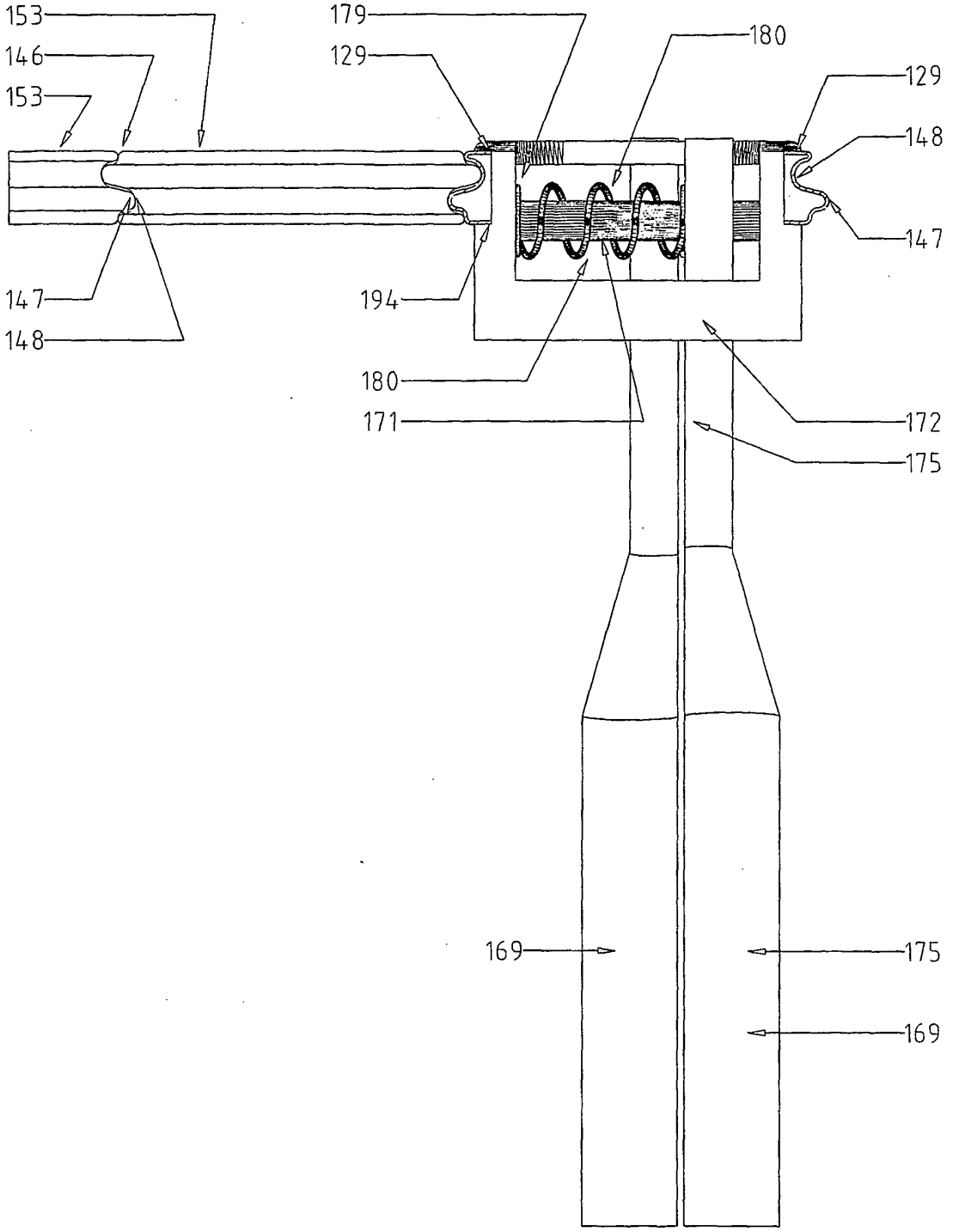
153
146
153
179
129
180
129
148
147
147
148
194
180
171
172
175
169
175
169

FIG. 21

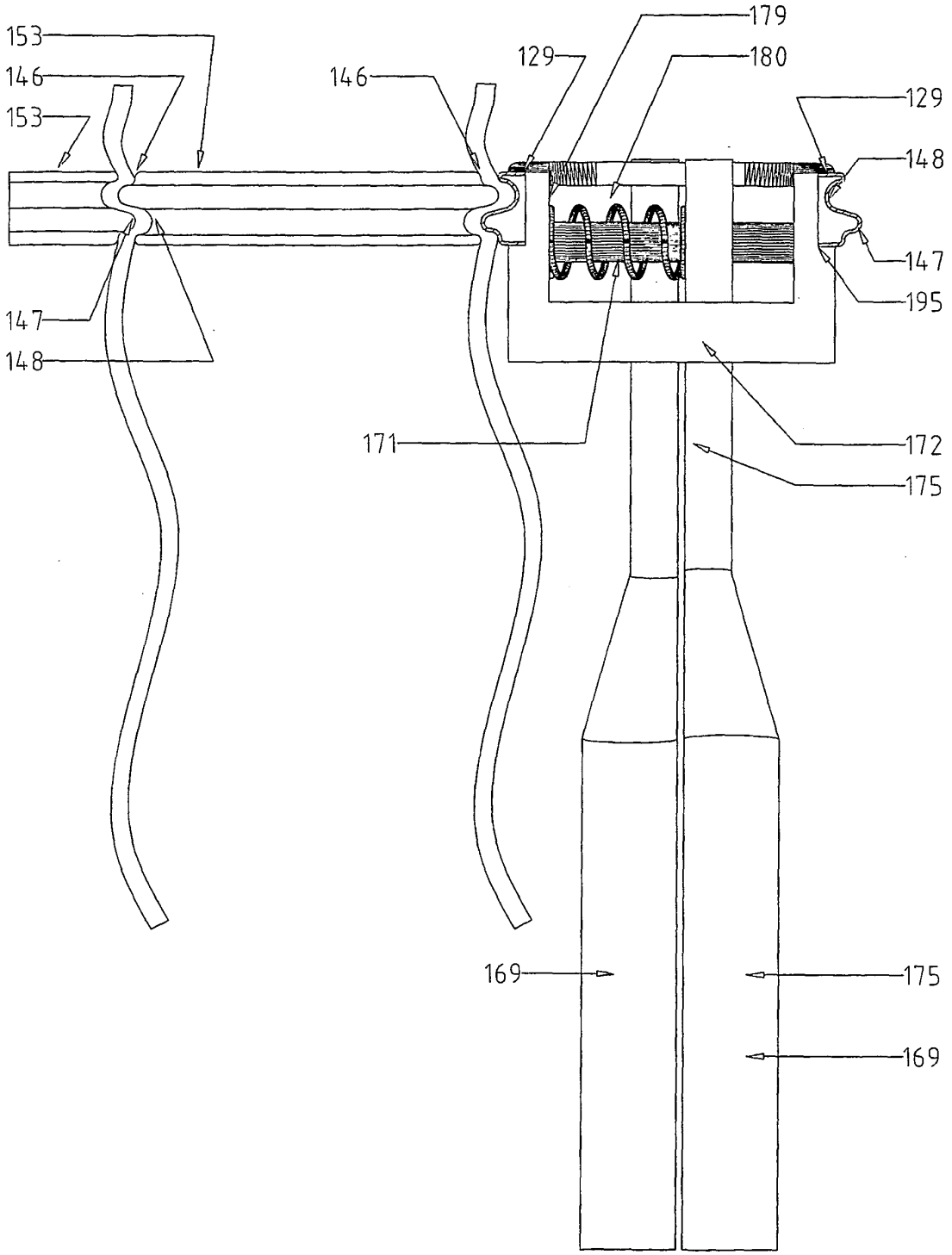
153
146
153
146
129
179
180
129
148
147
195
147
148
171
172
175
169
175
169

FIG. 22

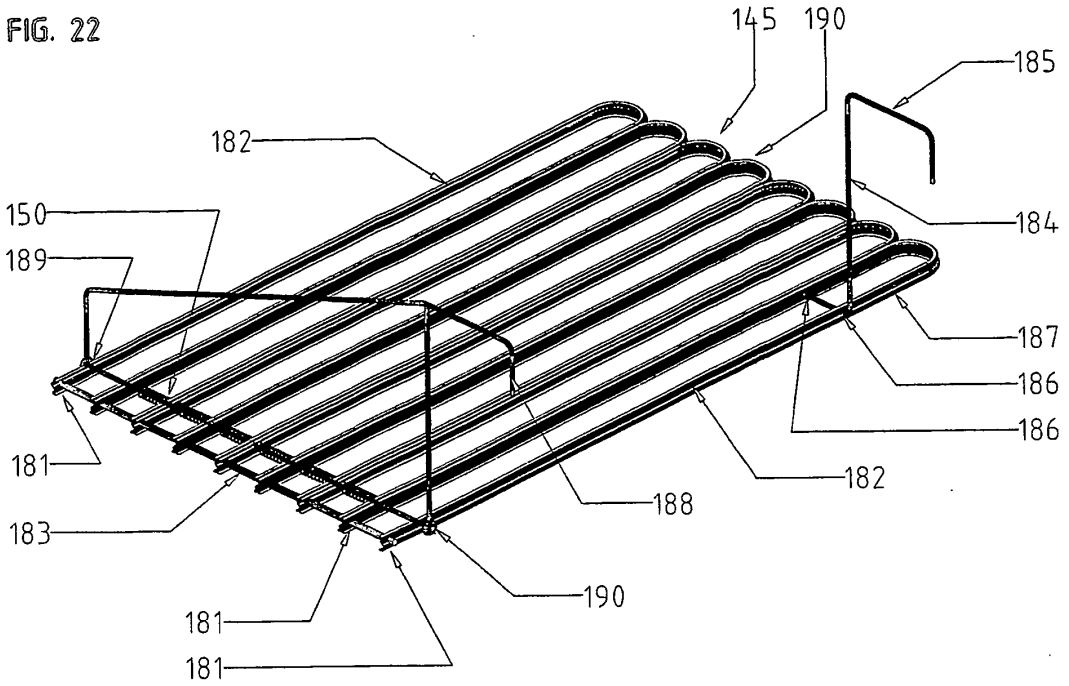
145
190
185
182
150
189
184
187
186
186
181
182
188
183
190
181
181

FIG. 23

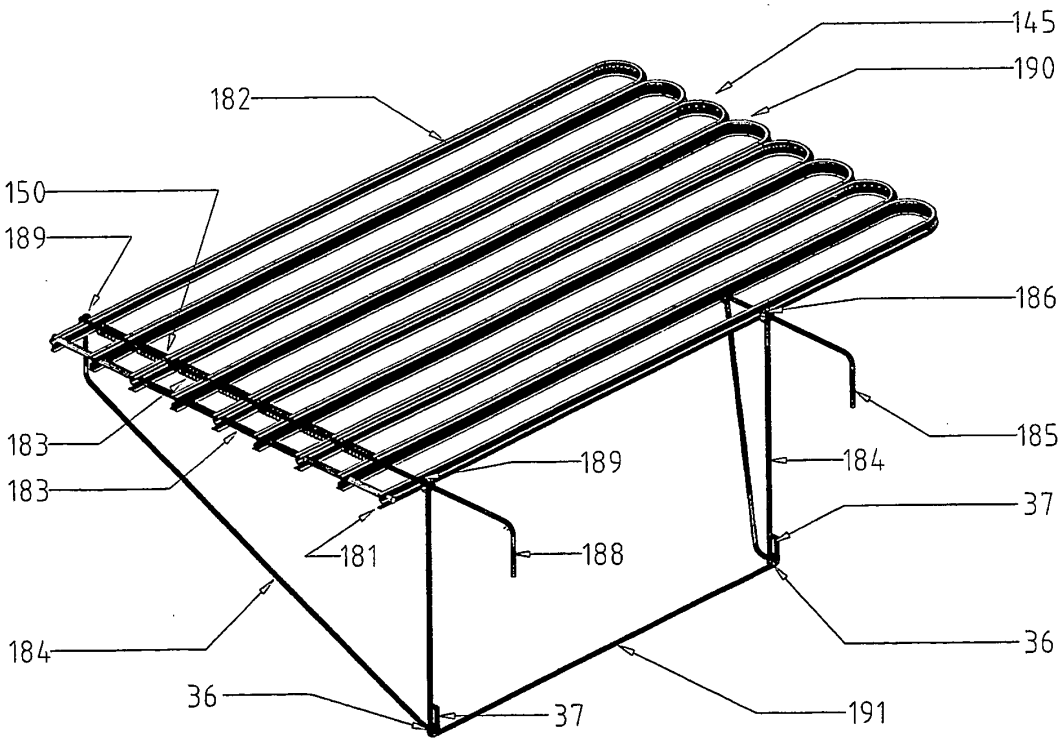
145
190
182
150
189
186
185
183
189
184
183
37
181
188
184
36
36
37
191

FIG. 24

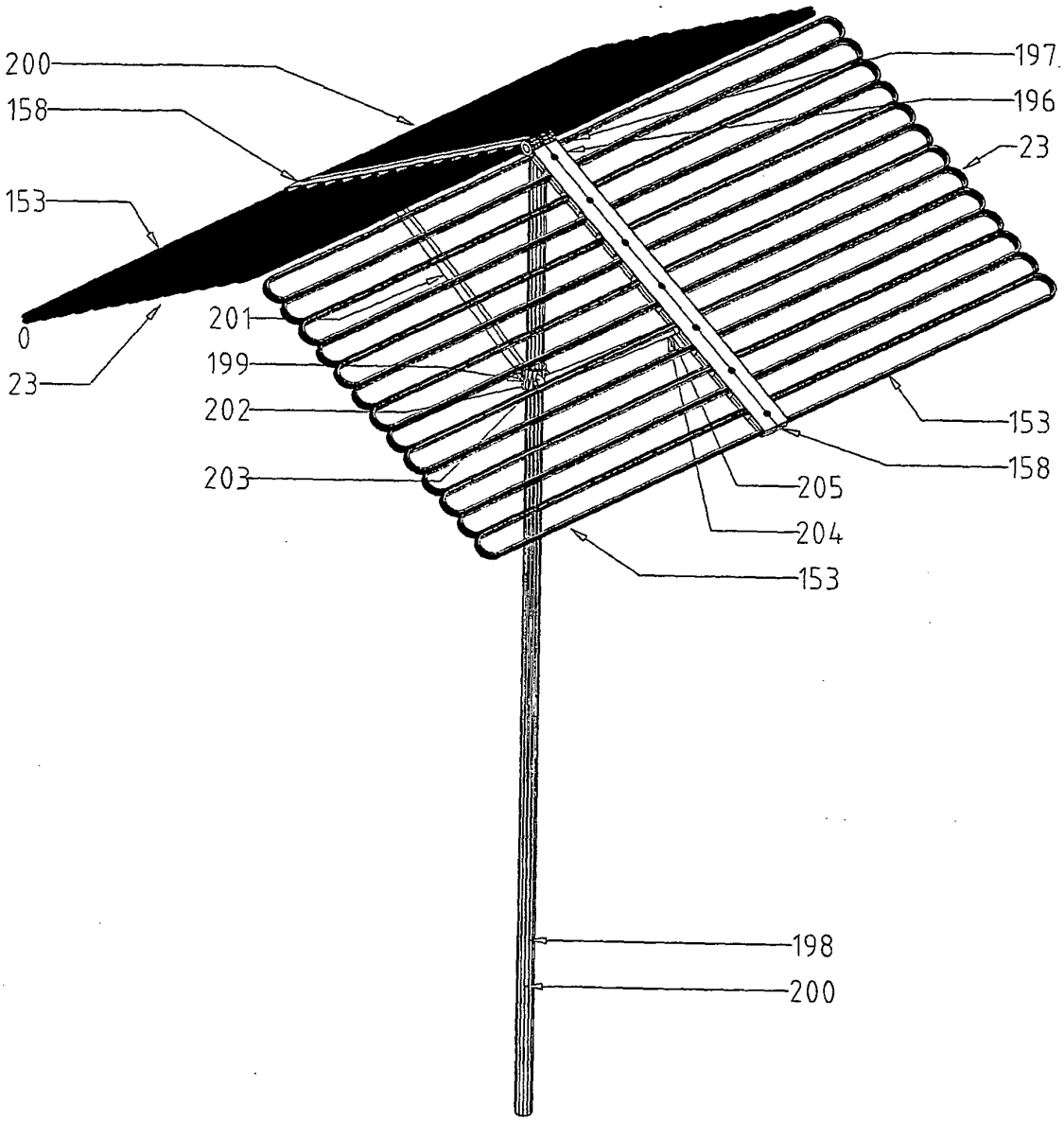
200
158
153
0
23
201
199
202
203
197
196
23
153
158
205
204
153
198
200

FIG. 25

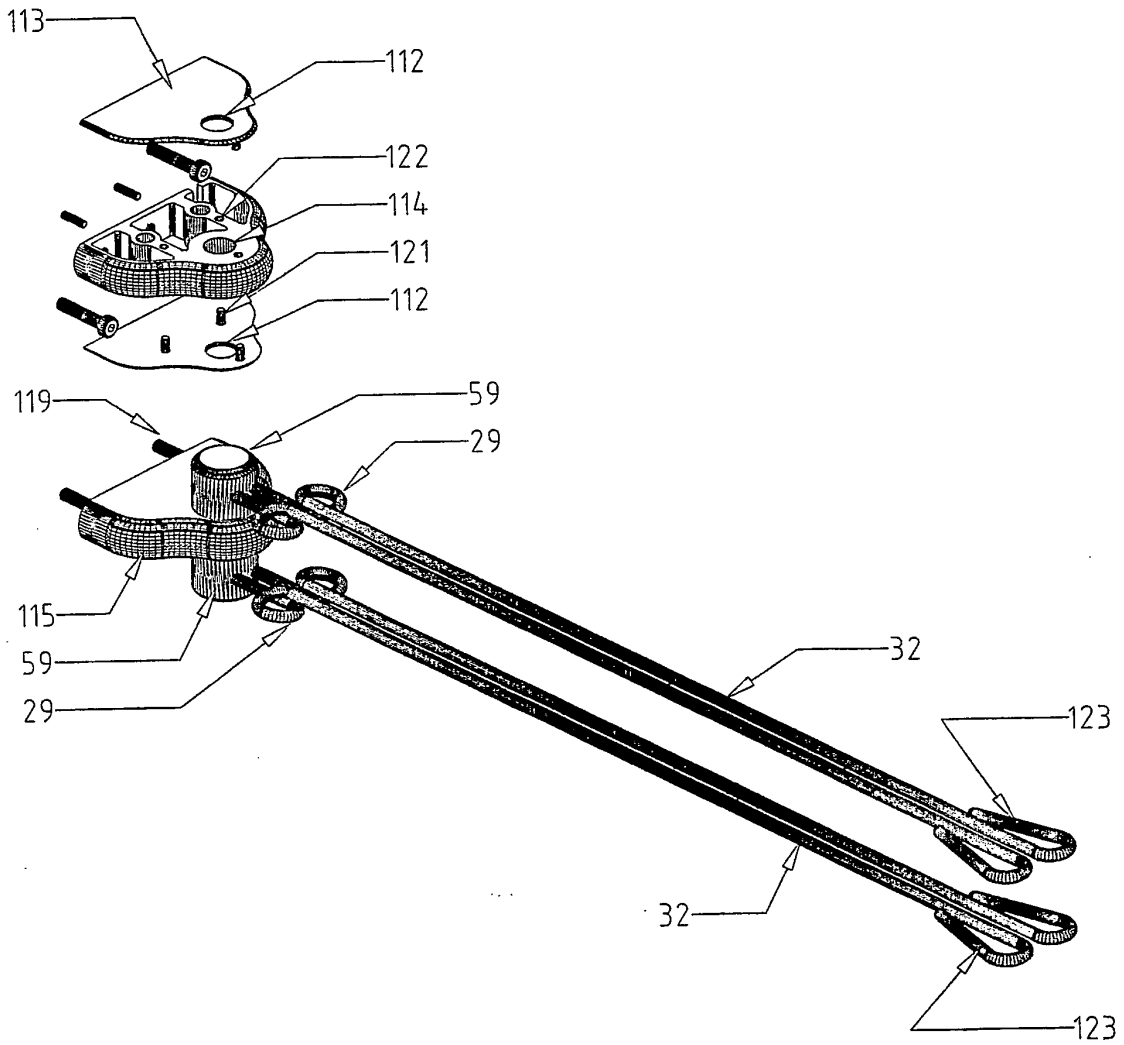

REFERENCES CITED IN THE DESCRIPTION

This list of references cited by the applicant is for the reader's convenience only. It does not form part of the European patent document. Even though great care has been taken in compiling the references, errors or omissions cannot be excluded and the EPO disclaims all liability in this regard.

Patent documents cited in the description

- JP 2003010596 A **[0003]**
- US 2443696 A **[0004]**