PCT WORLD INTELLECTUAL PROPERTY ORGANIZATION
International Bureau

INTERNATIONAL APPLICATION PUBLISHED UNDER THE PATENT COOPERATION TREATY (PCT)

(51) International Patent Classification 5 :		(11) International Publication Number:
B65D 47/08 // B65D 43/06 B65D 43/08, 43/10	A1	WO 93/03973
		(43) International Publication Date: 4 March 1993 (04.03.93)

(21) International Application Number: PCT/AU92/00451

(22) International Filing Date: 26 August 1992 (26.08.92)

(30) Priority data:
PK 7989 26 August 1991 (26.08.91) AU

(71)(72) Applicant and Inventor: WARNER, Gregory [NZ/AU]; 17 Nankeen Street, Modbury Heights, S.A. 5092 (AU).

(74) Agent: McMASTER, Wayne; Freehill Patent Services, Level 47, 101 Collins Street, Melbourne, VIC 3000 (AU).

(81) Designated States: AU, CA, RU, US, European patent (AT, BE, CH, DE, DK, ES, FR, GB, GR, IE, IT, LU, MC, NL, SE).

Published
With international search report.

(54) Title: A CONTAINER CAP

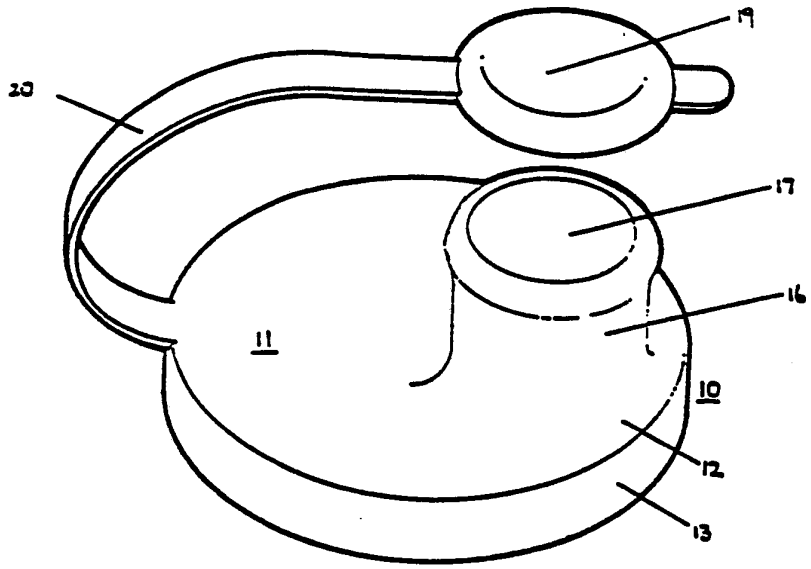

(57) Abstract

A cap (10) is provided for a container which in use substantially reduces loss of carbonation of a beverage on the container and minimises spillage of the beverage by sealing the container and provides an opening (17) through which a beverage may pass. The cap (10) comprises a body (11) having a peripheral ridge (12), and a flange (13) extending downwardly from peripheral ridge (12) defining an opening (17) to receive an end of the container. The cap (10) further comprises a spout (16) having an opening (17) extending from body (11) and a cover (19) to seal the opening (17). The cover (19) is provided with a flexible arm (20) having one end attached to the cover (19) and one end attached to the body (11) of the cap (10). The cap (10) may also form a snap fit with the container.

FOR THE PURPOSES OF INFORMATION ONLY

Codes used to identify States party to the PCT on the front pages of pamphlets publishing international applications under the PCT.

AT	Austria	**FI**	Finland	**MN**	Mongolia
AU	Australia	**FR**	France	**MR**	Mauritania
BB	Barbados	**GA**	Gabon	**MW**	Malawi
BE	Belgium	**GB**	United Kingdom	**NL**	Netherlands
BF	Burkina Faso	**GN**	Guinea	**NO**	Norway
BG	Bulgaria	**GR**	Greece	**NZ**	New Zealand
BJ	Benin	**HU**	Hungary	**PL**	Poland
BR	Brazil	**IE**	Ireland	**PT**	Portugal
CA	Canada	**IT**	Italy	**RO**	Romania
CF	Central African Republic	**JP**	Japan	**RU**	Russian Federation
CG	Congo	**KP**	Democratic People's Republic of Korea	**SD**	Sudan
CH	Switzerland			**SE**	Sweden
CI	Côte d'Ivoire	**KR**	Republic of Korea	**SK**	Slovak Republic
CM	Cameroon	**LI**	Liechtenstein	**SN**	Senegal
CS	Czechoslovakia	**LK**	Sri Lanka	**SU**	Soviet Union
CZ	Czech Republic	**LU**	Luxembourg	**TD**	Chad
DE	Germany	**MC**	Monaco	**TG**	Togo
DK	Denmark	**MG**	Madagascar	**UA**	Ukraine
ES	Spain	**ML**	Mali	**US**	United States of America

A CONTAINER CAP

FIELD OF THE INVENTION

The present invention relates to a cap adapted to be fitted to an open end of a container, especially a container containing carbonated liquids, to seal the container and substantially reduce the loss of carbonation of a beverage.

BACKGROUND OF THE INVENTION

For many years, containers containing carbonated beverages such as soft drinks and beer have been very popular amongst consumers.

Typically, these containers are in the form of cylinders of metal or plastic having closed ends. To access the carbonated beverage it is necessary to either pierce one of these ends or remove a preweakened portion of such end. Usually these containers are called "cans" and whilst the following description is in terms of a can, it will be understood that the invention is not so specifically limited.

Cans of this nature vary in size but usually contain the equivalent of a normal serve of the particular beverage which allows the consumer to drink directly from the can without the necessity of pouring the contents into a separate drinking vessel such as a glass. This is particularly convenient, if, for example, the consumer is in a moving vehicle and separate drinking vessels are not available or the motion of the vehicle would make pouring of the can difficult without spilling the contents.

The major disadvantage with cans of this nature is that once the can has been opened by whatever means, it is not possible to reseal it without using separate sealing devices.

The contents of an unsealed can that cannot be finished by the consumer are liable to be spilled or contaminated . Such a problem is exacerbated if the consumer is travelling in a moving vehicle. In addition, over time, if the can contains carbonated beverages, the carbonated beverage of an unsealed can will slowly "go flat" that is, lose its carbonation.

In order to eliminate the problems associated with spillage and contamination, attempts have been made over the years to provide means to seal these containers. All these means have been successful to a certain degree in eliminating the problems associated with the spillage and contamination of the contents of a container by providing a liquid tight seal. However, these efforts have been unsuccessful in substantially reducing loss of carbonation of the beverage.

In addition, in prior attempts to provide a liquid tight seal to an open end of containers, if the consumer wanted to continue to drink its contents it has been necessary to remove and physically separate the sealing device from the container and for the consumer to continue to drink from the pour opening. This has proven to be very inconvenient.

Accordingly, investigations were undertaken to overcome the problems associated with sealing the open end of cans to avoid any spillage and contamination, and to substantially reduce loss of carbonation of the beverage. It was also thought desirable that the cap have a pouring opening to allow the consumer to drink or pour the contents from the container without removing the entire cap.

SUMMARY OF THE INVENTION

The invention provides a cap comprised of substantially gas-impermeable, flexible material for a substantially cylindrical container in which carbonated beverages are stored, the cap having:

a periphery to sealingly engage an end of the container through which beverage is to be dispensed;

an opening;and

a cover to sealably close the opening,

whereby the periphery, opening and cover of the cap in situ combine to substantially reduce the loss of carbonation of the beverage when the container has been opened.

Preferably the cap is substantially planer.

In another preferred embodiment of the invention the periphery includes a flange which defines a cylindrical cavity to receive an end of a cylindrical container. Preferably, the flange is adapted so that in use it

engages the end of the container, for example, by a rim engaging the rolling seam of a can.

Further, the cap may be provided with an inner flange concentric with the flange, the periphery and concentric flange defining a groove to receive an upstanding rim on the end of a can. By sealing the upstanding rim from both sides of the ridge, an enhanced gas-tight seal is effected.

In a further preferred embodiment of the invention the cover is additionally provided with a flexible arm having one end attached to the cover and the other end attached to the cap, which other end is preferably attached to the cap at either the periphery or centrally.

In yet another further preferred embodiment of the invention, a pouring projection known as a spout extends from about the opening. Preferably the spout is of substantially circular cross-section. The spout may be provided with at least one peripheral flange about its outer end. In such arrangement, the cover is of a shape which requires deformation to envelope the opening of the spout over the flange. An enhanced snap seal is achieved by providing the spout with a groove to receive the flange of the spout which enhances the gas-tight seal of the cover about the spout. Preferably, the spout is located adjacent to the periphery of the body of the container to make drinking of the beverage directly from the container more comfortable.

ILLUSTRATIONS OF THE INVENTION

The invention is illustrated by the accompanying drawings, in which:

Figure 1 is a top perspective view of one form of the invention;

Figure 2 is a bottom perspective view of the invention of figure 1;

Figure 3 is a top perspective view of a second form of the invention;

Figure 4 is a bottom perspective view of the second form of the invention of figure 3;

Figure 5 is a cross-sectional view of a third form of the invention; and

Figure 6 is a cross-sectional view of the top portion of a container of beverage on which the invention is adapted to be used.

Figure 7 is a cross-sectional view of a fourth form of the invention.

Figure 8 is a cross-sectional view of a fifth form of the invention.

In the drawings, where like components are illustrated they are designated by the same number.

As shown in figures 1 and 2 a cap 10 comprises a body 11 having a periphery 12. A flange 13 extends downwardly from the periphery 12. As more clearly shown in figure 2 an inner flange 14 concentric with flange 13 defines an annular opening 15 therebetween.

Cap 10 further comprises a spout 16 extending from body 11. Spout 16 is of a general cylindrical shape and defines an opening 17 with a flange 23 at its outer end and an inner opening 18.

Cover 19 is permanently affixed to peripheral rim 12 by a flexible strip 20. The internal cylindrical surface 21 of cover 19 approximates the outer dimension of spout 17.

In figures 3 and 4, a similar form of the cap shown in figures 1 and 2 respectively is illustrated. The principal differences are the absence of concentric inner flange 14 and the substantially planar characteristic of body 11.

In figure 5, a cross-section of a cap is shown which is similar to the cap of figures 3 and 4. However, at the extremity of flange 13 is an inwardly projecting rim 25 to assist in the forming of the seal by engaging under a rim 26 of a can 27 as depicted in figure 6. Further, figure 5 also depicts a restriction 24 which is provided about the inner cylindrical surface 21 of cover 19. A snap fit is thereby possible between the cover 19 and spout 16 due to the engagement of flanges 23 and 24.

In figure 7, a cross-section of a cap is shown which is similar to the cap illustrated in figures 1 and 2. However, at the extremity of flange 13 is an inwardly projecting rim 22 to assist in the forming of the seal by engaging under a seam of a can as illustrated in figure 6. Figure 7 also illustrates how there may be more than one flange 23 to assist in the cover sealingly closing the opening. Mounting is adapted to receive as a point of attachment strip 20 where strip 20 and cover 19 are manufactured as one piece separately from the body of the cap 10, which configuration is illustrated in figure 8.

In figure 8, a cross-section of a cap is shown which is similar to the cap of figures 3 and 4. Figure 8 also shows rim 22 as described for figure 7. Figure 8 demonstrates the two piece construction of a preferred embodiment of the invention in which cover 19 and strip 20 may be manufactured separately and subsequently attached to the body of the cap 10 by mounting 28.

In use, the cap 10 can be applied to a cylindrical container by pressing the cap 10 onto one end of the can. Flange 13, and in one embodiment in conjunction with inner flange 14, envelopes the end of the can and forms a substantially gas-tight seal with it. Where the can has a rim 26, rim 22 in one embodiment and rim 25 in another embodiment engage rim 26 to assist in the forming of the substantially gas-tight seal.

When it is desired to maintain an opened can in substantially gas-tight condition, cover 19 is forced downwardly over spout 16 to close outer opening 17. This seal is enhanced by the snap lock arrangement of forcing cover 19 over the spout 16 by flanges 23 and 24.

The entire cap may be manufactured from food-grade plastic which is flexible and substantially gas-impermeable. The cap may be manufactured by conventional injection moulding of such plastic material. The manufacture of a cap similar to the caps illustrated in figures 1 through to 5 inclusive may be as one piece. Alternatively, the cap may be manufactured in two pieces as illustrated as in figures 7 and 8 where one piece is cover 19 and flexible strip 20 and the other piece is the body of the cap 11.

In summary, the present invention provides a cap for a container, which if it contains a carbonated beverage, substantially maintains the carbonation in the beverage. Additionally, its construction enables spillage to be minimised by the seal and additionally by the spout which facilitates drinking of the beverage from the container.

THE CLAIMS DEFINING THE INVENTION ARE AS FOLLOWS:

1. A cap comprised of substantially gas-impermeable, flexible material for a substantially cylindrical container in which carbonated beverages are stored, the cap having:
a periphery to sealingly engage an end of the container through which beverage is to be dispensed;
an opening;and
a cover to sealably close the opening,
whereby the periphery, opening and cover of the cap in situ combine to substantially reduce the loss of carbonation of the beverage when the container has been opened.

2. A cap according to claim 1 which is substantially planar.

3. A cap according to any one of claims 1 or 2 wherein the periphery includes a flange defining a substantially cylindrical cavity into which the end of the container is adapted to be received.

4. A cap according to claim 3 wherein the periphery further includes an inner flange which defines with the flange a groove adapted to receive an upstanding annular rim on the end of the substantially cylindrical container.

5. A cap according to any one of claims 1 to 4 further comprising a pouring projection extending from about the opening.

6. A cap according to claim 5 wherein the pouring projection has a peripheral flange receivable within a groove formed in the cover to sealably close the opening.

7. A cap according to any one of claims 1 to 6 further comprising a flexible arm having one end attached to the cover and the other end attached to the periphery of the cap.

8. A cap according to any one of claims 1 to 6 further comprising a flexible arm having one end attached to the cover and the other end attached to a mounting located centrally on the cap.

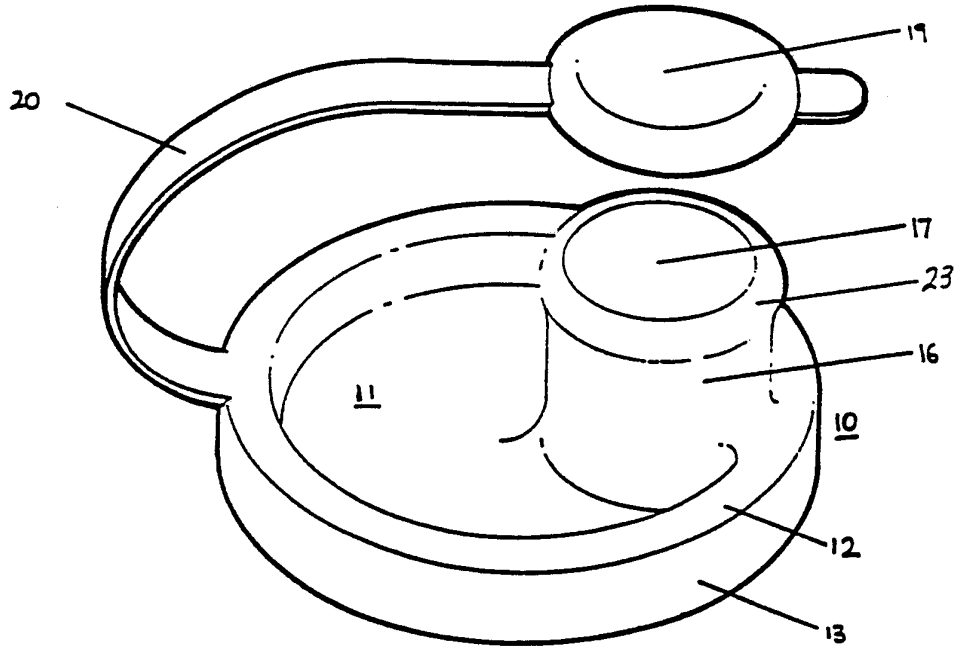

Figure 1.

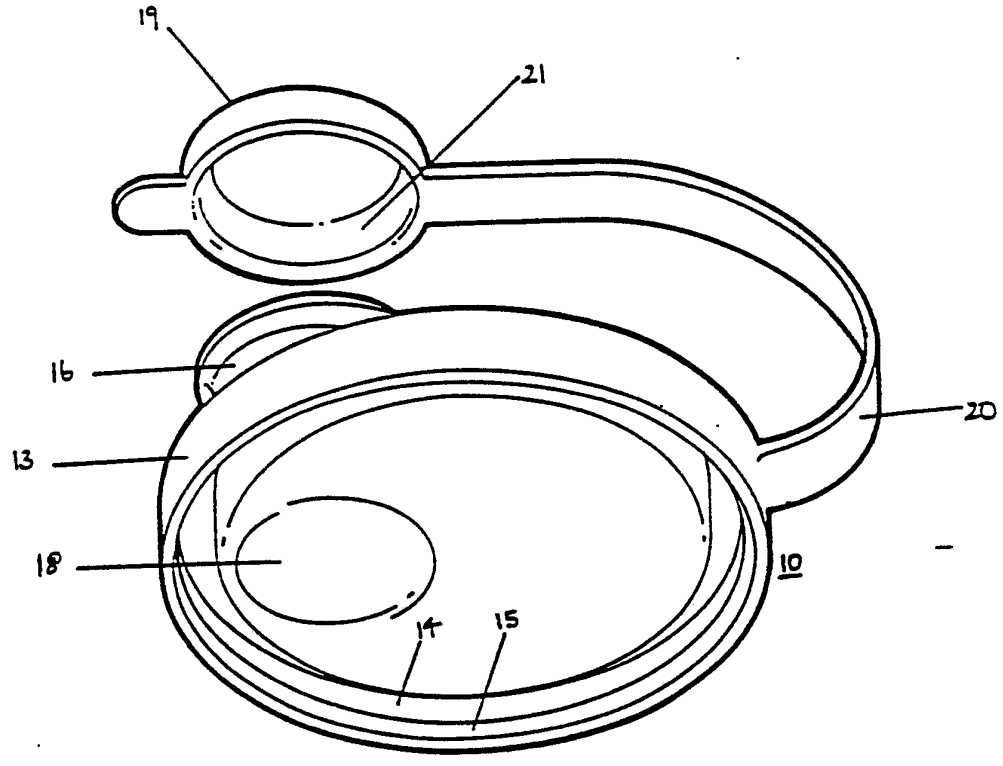

Figure 2.

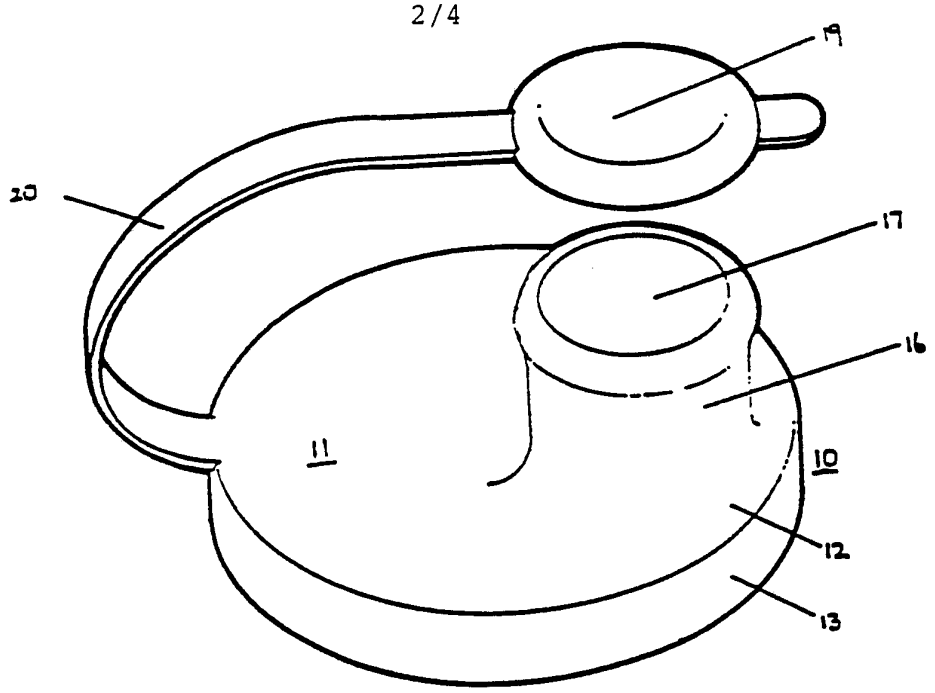

Figure 3.

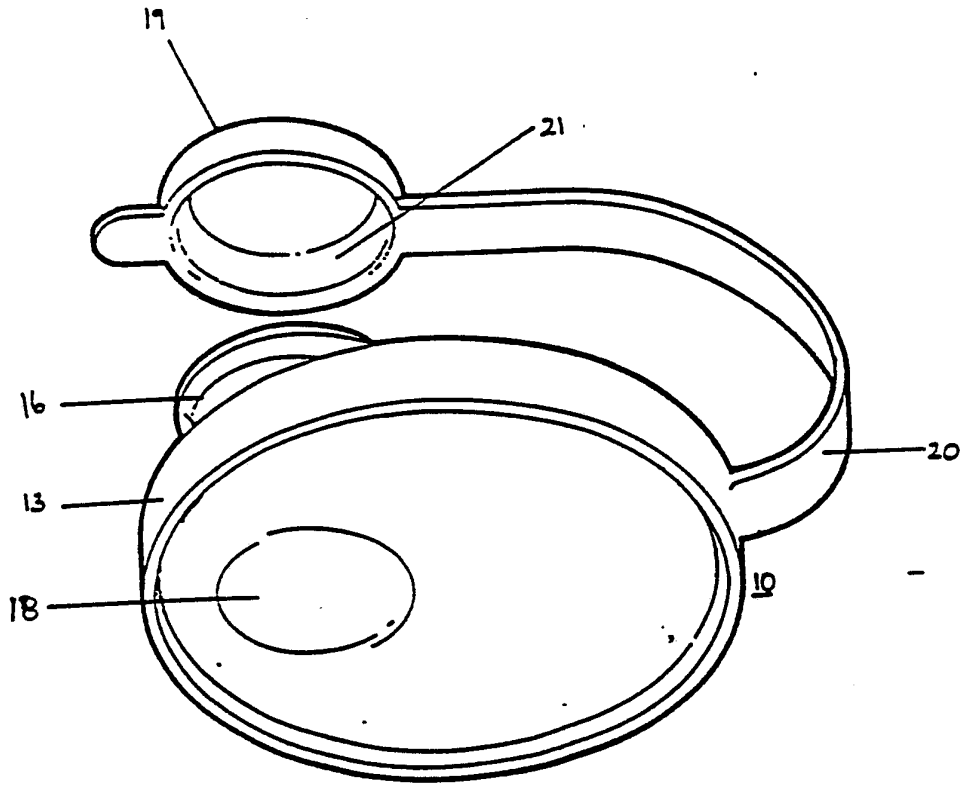

Figure 4.

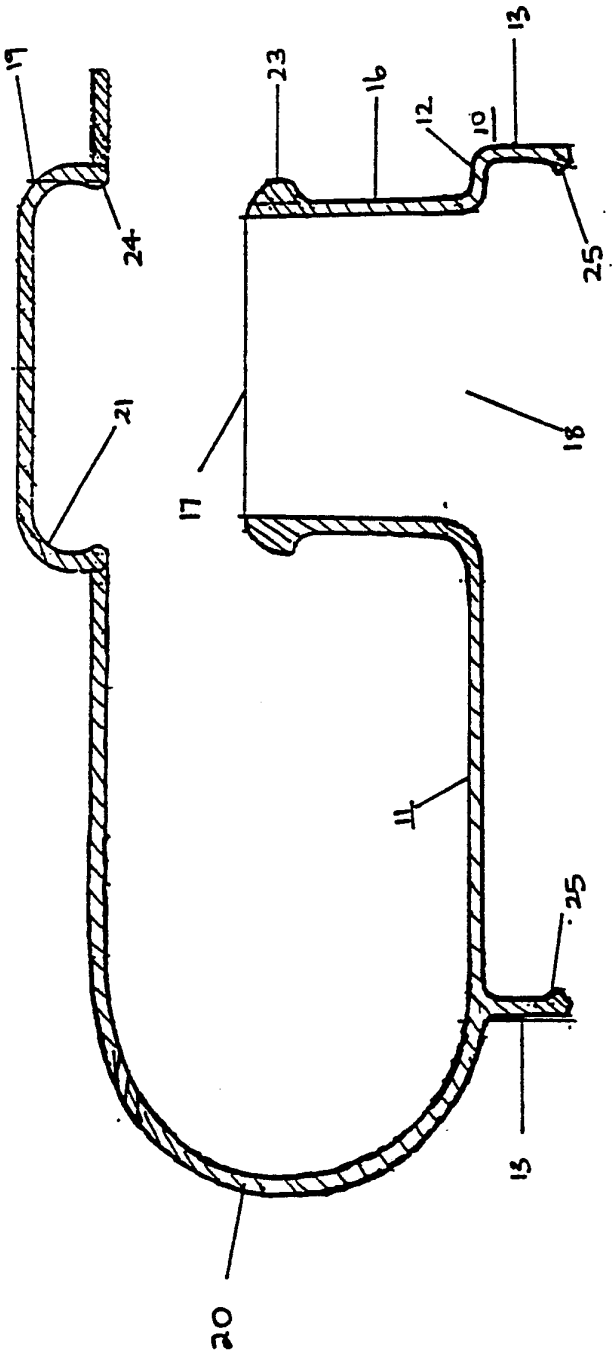

Figure 5

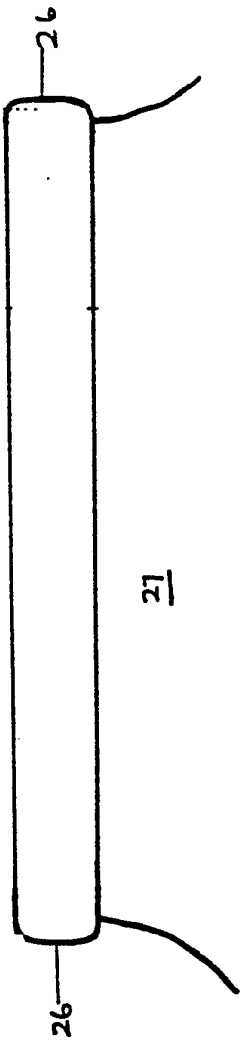

Figure 6

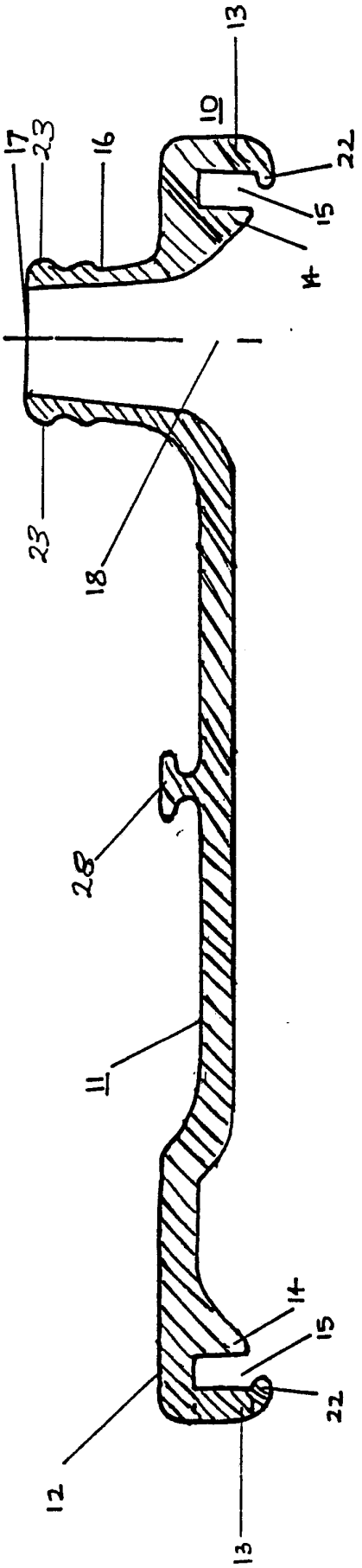

Figure 7

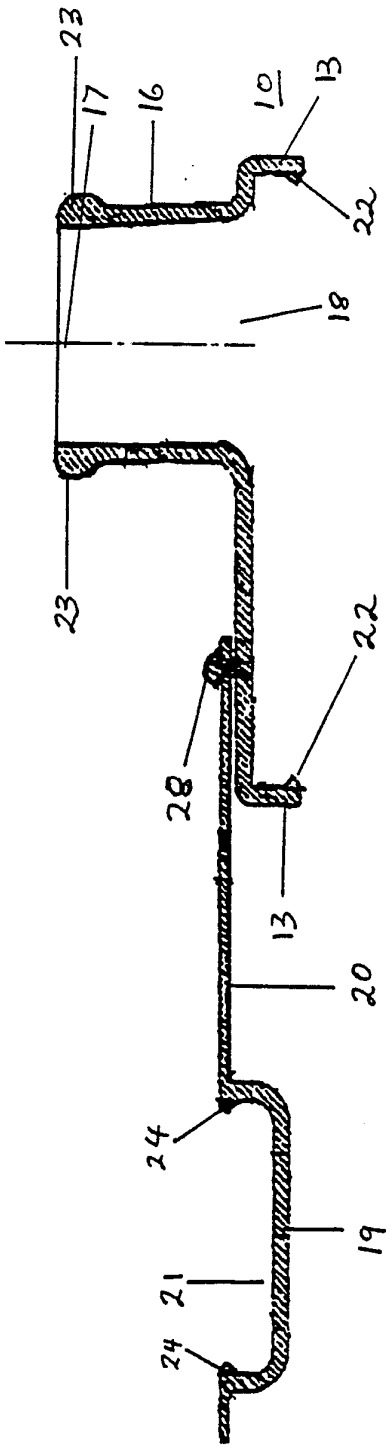

Figure 8

INTERNATIONAL SEARCH REPORT

International application No.
PCT/AU92/00451

A. CLASSIFICATION OF SUBJECT MATTER
Int. Cl.[5] B65D 47/08 // B65D 43/06, 43/08, 43/10

According to International Patent Classification (IPC) or to both national classification and IPC

B. FIELDS SEARCHED

Minimum documentation searched (classification system followed by classification symbols)
IPC B65D 41/28-/30, 43/00-/12, 47/4-/18

Documentation searched other than minimum documentation to the extent that such documents are included in the fields searched
AU: IPC as above

Electronic data base consulted during the international search (name of data base, and where practicable, search terms used)

C. DOCUMENTS CONSIDERED TO BE RELEVANT

Category*	Citation of document, with indication, where appropriate, of the relevant passages	Relevant to Claim No.
X	AU,A,1708/38 (FREEMAN) 27 April 1938 (27.04.38) page 1 line 14 - page 2 line 3, figures	1,3,4
X	AU,A,64583/65 (REXALL DRUG AND CHEMICAL CO.) 6 April 1967 (06.04.67) page 8 lines 16-20	1-6
X	AU,A, 3211/66 (REXALL DRUG AND CHEMICAL CO.) 28 September 1967 (28.09.67) the whole specification	1-8

[X] Further documents are listed in the continuation of Box C.

[X] See patent family annex.

* Special categories of cited documents :

"A" document defining the general state of the art which is not considered to be of particular relevance
"E" earlier document but published on or after the international filing date
"L" document which may throw doubts on priority claim(s) or which is cited to establish the publication date of another citation or other special reason (as specified)
"O" document referring to an oral disclosure, use, exhibition or other means
"P" document published prior to the international filing date but later than the priority date claimed
"T" later document published after the international filing date or priority date and not in conflict with the application but cited to understand the principle or theory underlying the invention
"X" document of particular relevance; the claimed invention cannot be considered novel or cannot be considered to involve an inventive step when the document is taken alone
"Y" document of particular relevance; the claimed invention cannot be considered to involve an inventive step when the document is combined with one or more other such documents, such combination being obvious to a person skilled in the art
"&" document member of the same patent family

Date of the actual completion of the international search	Date of mailing of the international search report
12 November 1992 (12.11.92)	30 NOV 1992 (30.11.92)
Name and mailing address of the ISA/AU AUSTRALIAN PATENT OFFICE PO BOX 200 WODEN ACT 2606 AUSTRALIA Facsimile No. (06) 2811841	Authorized officer G.M. Cox Telephone No. (06) 2832484

C(Continuation). DOCUMENTS CONSIDERED TO BE RELEVANT

Category*	Citation of document, with indication, where appropriate of the relevant passages	Relevant to Claim No.
X	AU,A,5663/66 (REXALL DRUG AND CHEMICAL CO.) 23 November 1967 (23.11.67) page 4 line 16 - page 5 line 19, fig. 1	1-8
X	AU,A,11328/66 (GUNNAR NIMROD PETTERSEN) 21 March 1968 (21.03.68) the whole specification	1,3,5,7
X	AU,B,23050/77 (DART INDUSTRIES INC.) 14 September 1978 (14.09.78) figs. 1-3	1-5,8
X	AU,A,70447/81 (LEITH) 18 November 1982 (18.11.82) page 1A line 14 - page 2 line 1 whole specification	1-6
X	AU,A,21544/83 (TONTARELLI) 21 June 1984 (21.06.84) figs. 1-5	1,5-7
X	AU,A,25717/84 (QUEHL) 15 August 1985 (15.08.85) page 2 line 18 - page 3 line 7	1-4,7
X	AU,B,69584/87 (HENDERSON) 30 January 1989 (30.01.89) page 4 lines 14-22	1,3-6,8
X	US,A,2911128 (KRAUTKRÄMER) 3 November 1959 (03.11.59) fig. 1	1,3,5,7
X	GB,A,1049225 (MORRISON) 23 November 1966 (23.11.66) page 1 lines 40-69	1,3-7

This Annex lists the known "A" publication level patent family members relating to the patent documents cited in the above-mentioned international search report. The Australian Patent Office is in no way liable for these particulars which are merely given for the purpose of information.

Patent Document Cited in Search Report	Patent Family Member					
AU 70447/81						
AU 21544/83	AT	34545	DE	3376743	EP	112306
	IT	1158549	JP	59152158	US	4511057
AU 25717/84	WO	8503421	EP	169835		
AU 69584/87						
AU 64583/65	AT	279469	BE	670975	NL	6513804
	NO	116362	SE	311609		
AU 3211/66	BE	679203	DK	116564	FI	48565
	IL	25488	NL	6604821		
AU 5663/66	AT	279470	BE	682611	DE	1536234
	FI	48055	GB	1151702	IL	25805
	JP	49044255	LU	51367	NL	6608548
	NO	117573	SE	317005		
AU 11328/66	AT	279397	BE	686975	DK	119815
	GB	1150612	NL	6613241	SE	304931
	US	3419198				
AU 23050/77	AR	211059	AT	2459/77	BE	852467
	BR	7702750	CA	1093503	CH	599005
	DE	2711591	DK	1978/77	ES	228359
	FI	771268	FR	2350079	GB	1548079
	GR	61203	HK	440/80	IE	44893
	IT	1080356	JP	52136089	JP	60042106
	LU	76977	MX	145084	MY	191/80
	NL	7704828	NO	771378	NZ	183614
	PH	13323	PL	102079	PT	66359
	SE	7705318	US	4047648	ZA	7701538