US 20100121248A1

(19) **United States**

(12) **Patent Application Publication**

(10) **Pub. No.: US 2010/0121248 A1**

(43) **Pub. Date: May 13, 2010**

Yu et al.

(54) **APPARATUS FOR REDUCING PRESSURE IN AN ORGAN**

(75) Inventors: **Dao-Yi Yu**, City Beach (AU); **Cory Anderson**, Alpharetta, GA (US); **Roelof Trip**, Suwanee, GA (US); **Ying Yang**, Union City, CA (US); **Hoang Van Nguyen**, San Jose, CA (US); **Surag Mantri**, Sunnyvale, CA (US); **Er-Ning Su**, City Beach (AU); **Stephen Cringle**, Shenton Park (AU); **James McCrea**, Burlingame, CA (US); **Daniel Mufson**, Napa, CA (US); **Colin Tan**, Sunnyvale, CA (US)

Correspondence Address:
MCDERMOTT WILL & EMERY LLP
18191 VON KARMAN AVE., SUITE 500
IRVINE, CA 92612-7108 (US)

(73) Assignee: **AqueSys, Inc.**, Irvine, CA (US)

(21) Appl. No.: **12/620,552**

(22) Filed: **Nov. 17, 2009**

Related U.S. Application Data

(63) Continuation of application No. 11/771,805, filed on Jun. 29, 2007.

(60) Provisional application No. 60/806,402, filed on Jun. 30, 2006.

Publication Classification

(51) **Int. Cl.**
A61M 1/00 (2006.01)

(52) **U.S. Cl.** **604/8**

(57) **ABSTRACT**

Methods, system and apparatus for relieving pressure in an organ such as, but not limited to, the eye are disclosed. The method includes implanting a bioabsorbable channel into the selected area of the organ using a delivery apparatus.

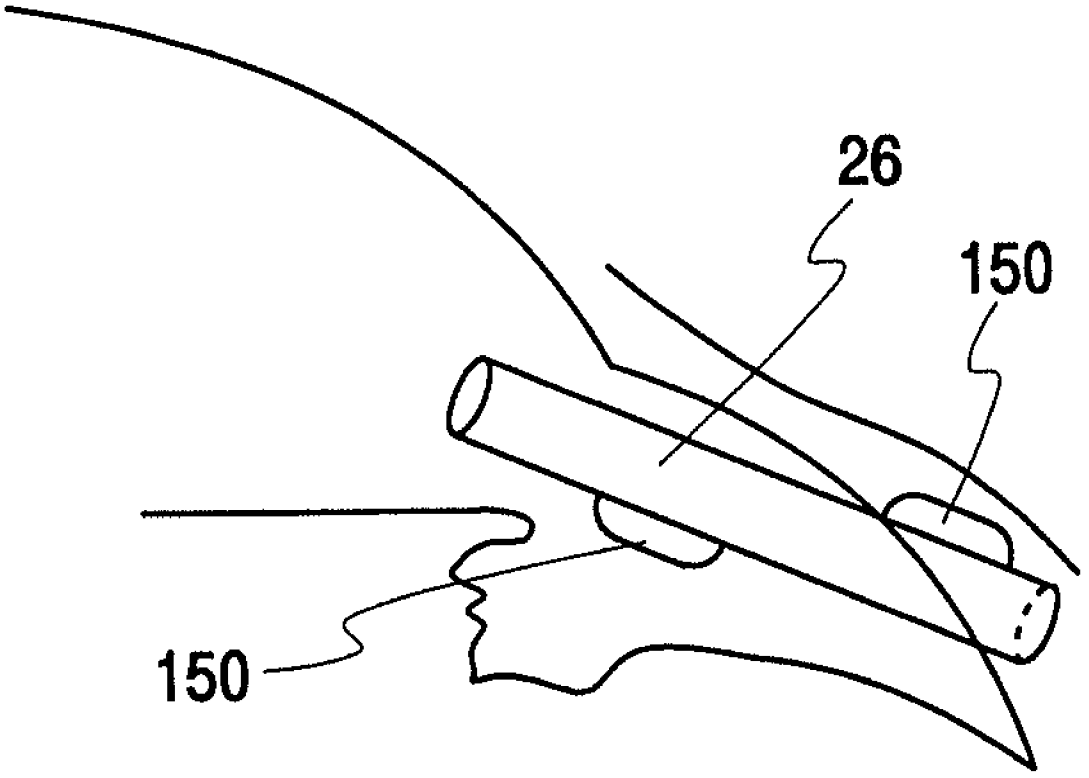

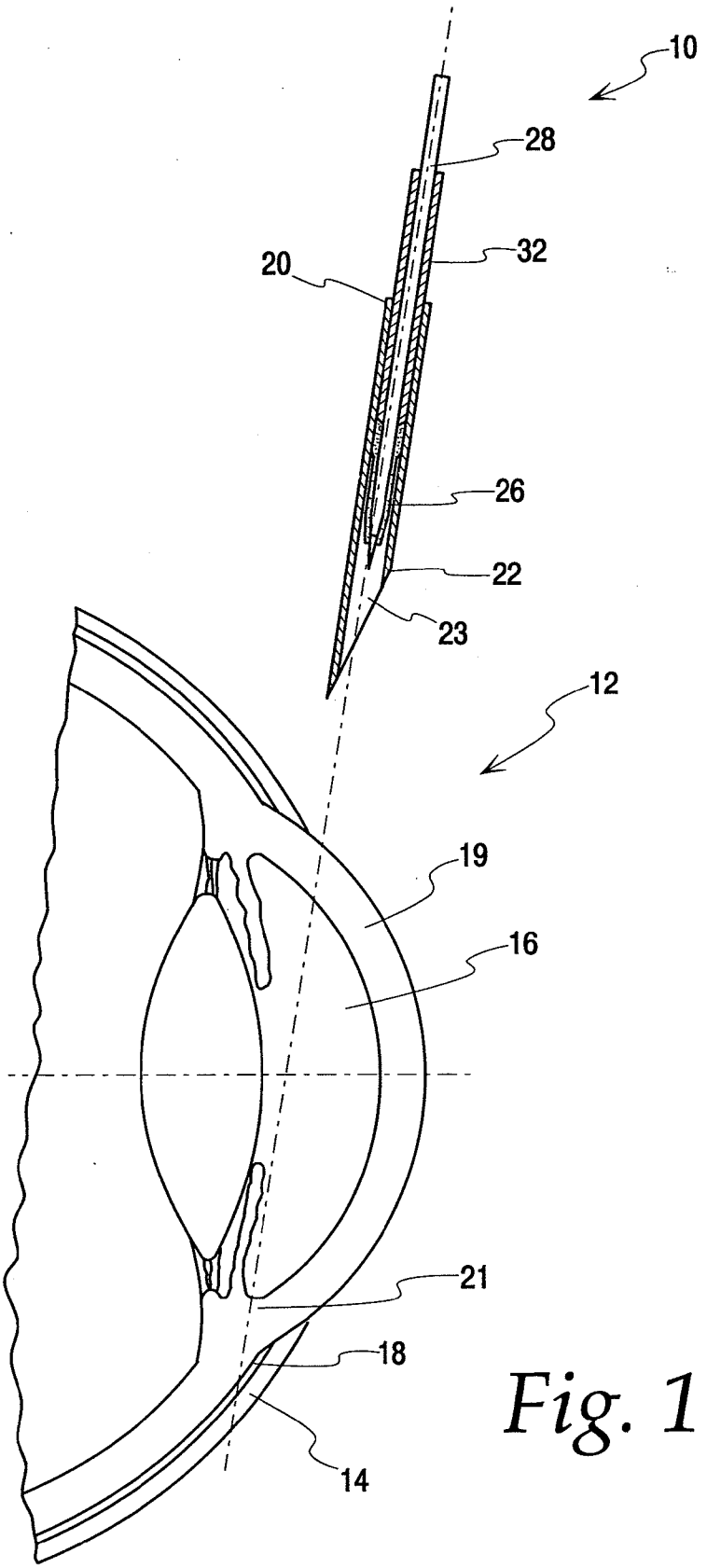

Fig. 1

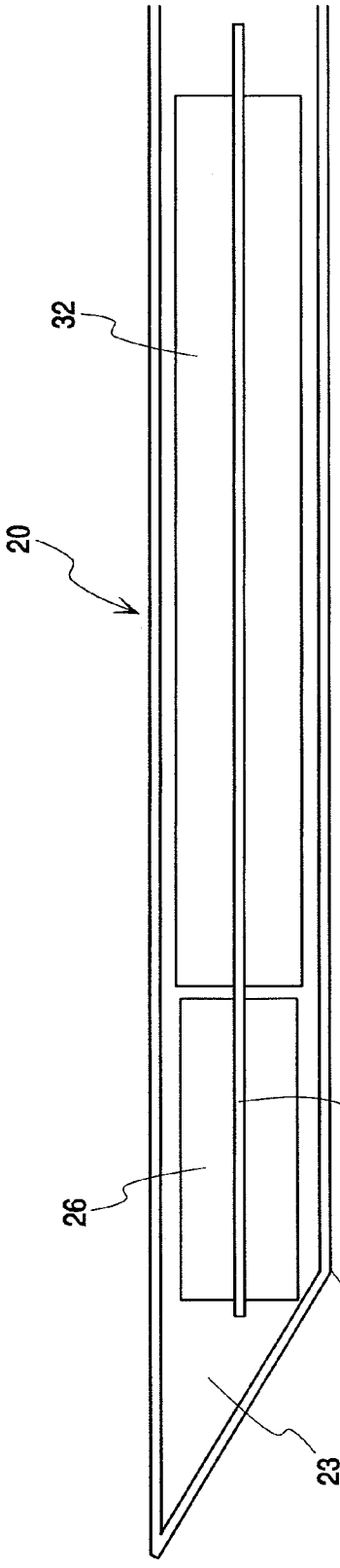

Fig. 2

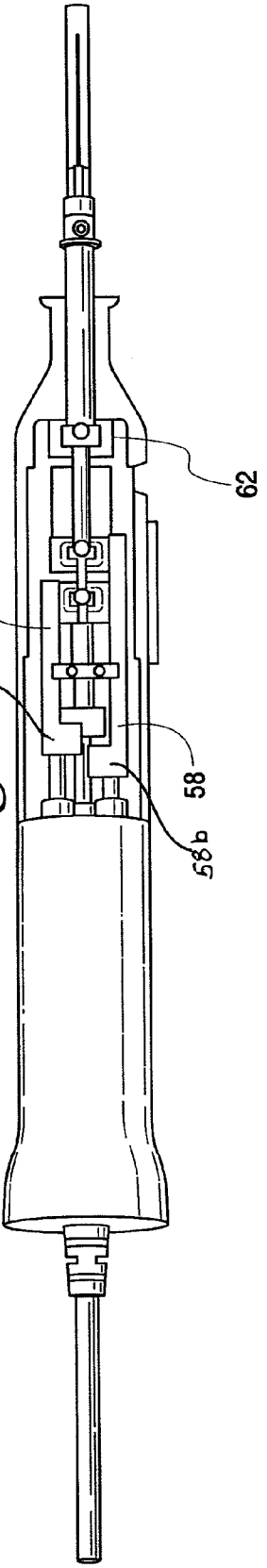

Fig. 4

Fig. 3

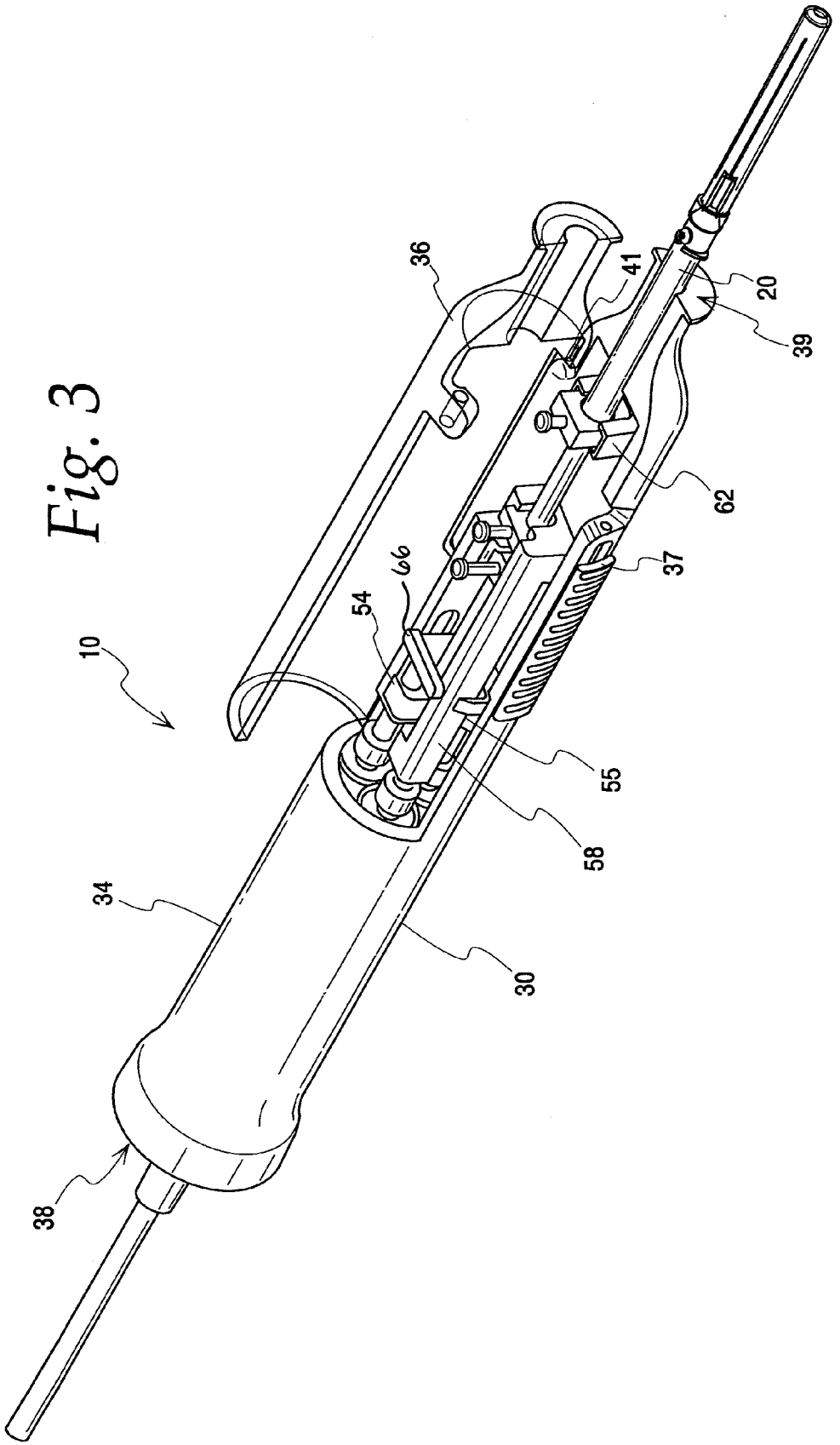

Fig. 5

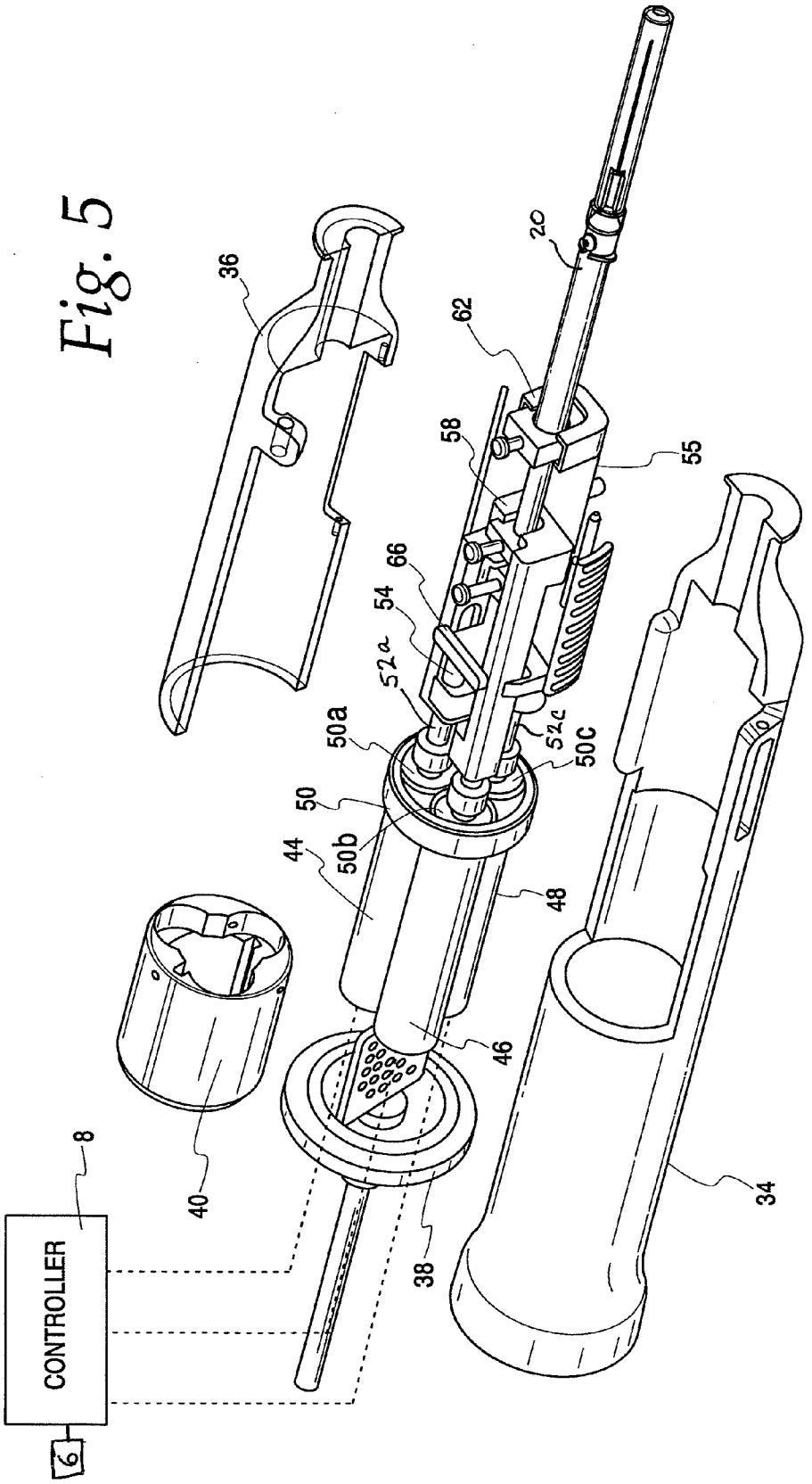
CONTROLLER
8
9
20
34
36
38
40
44
46
48
50
50a
50b
50c
52a
52c
54
55
58
62
66

Fig. 6

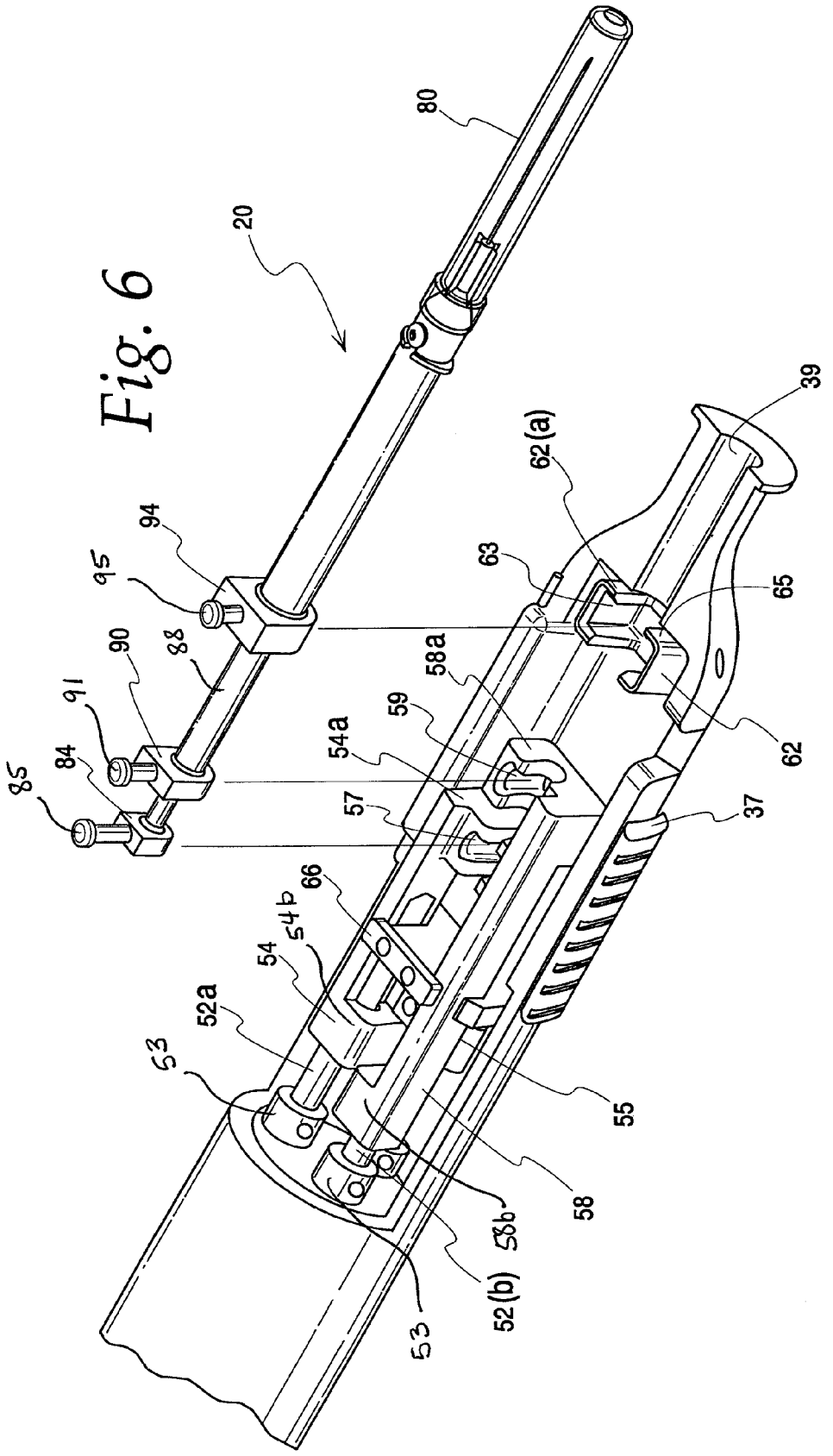
80
20
39
62(a)
94
95
63
65
90
88
58a
91
59
62
84
54a
85
57
37
66
54b
54
52a
53
55
58
58b
52(b)
53

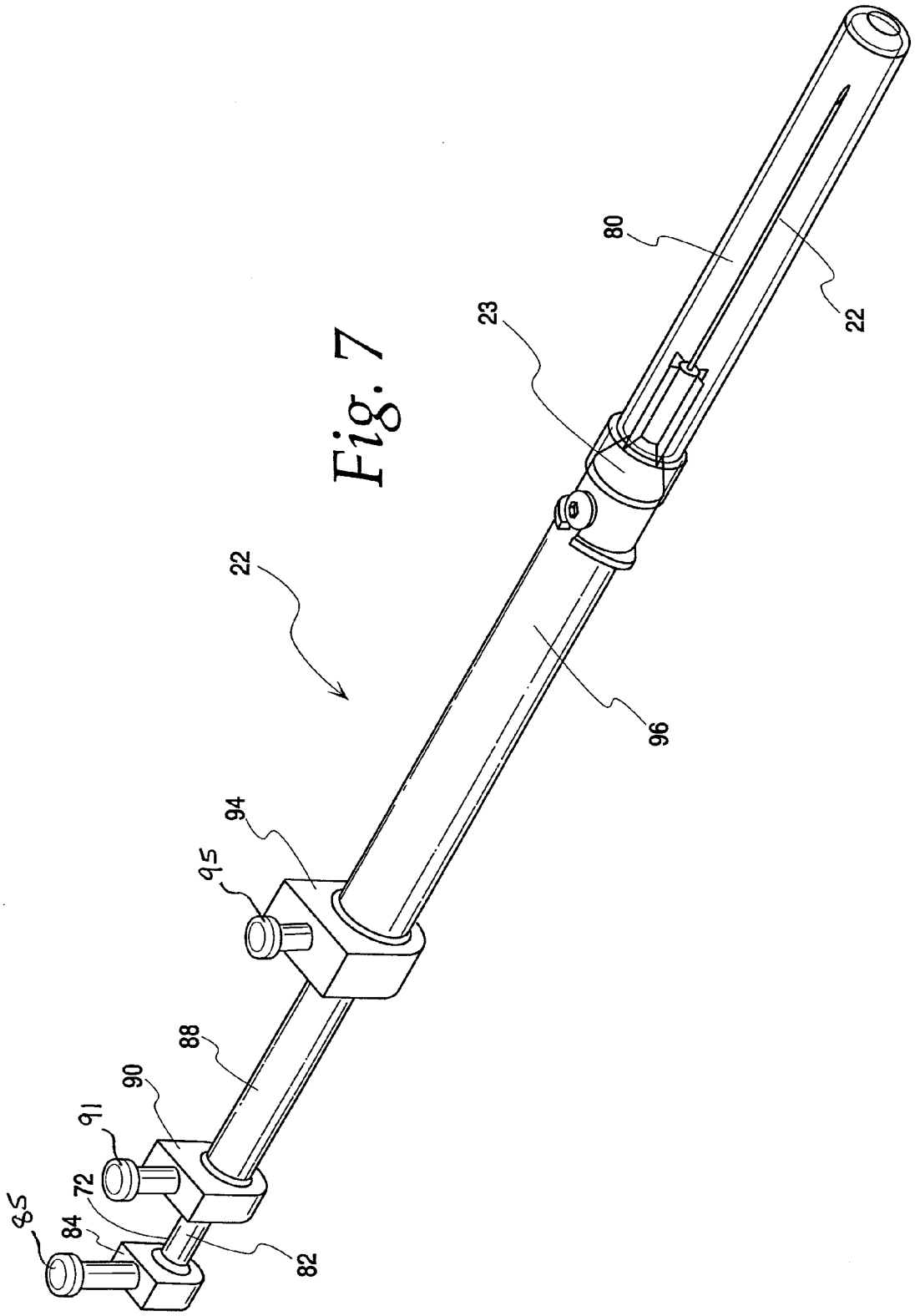

Fig. 7

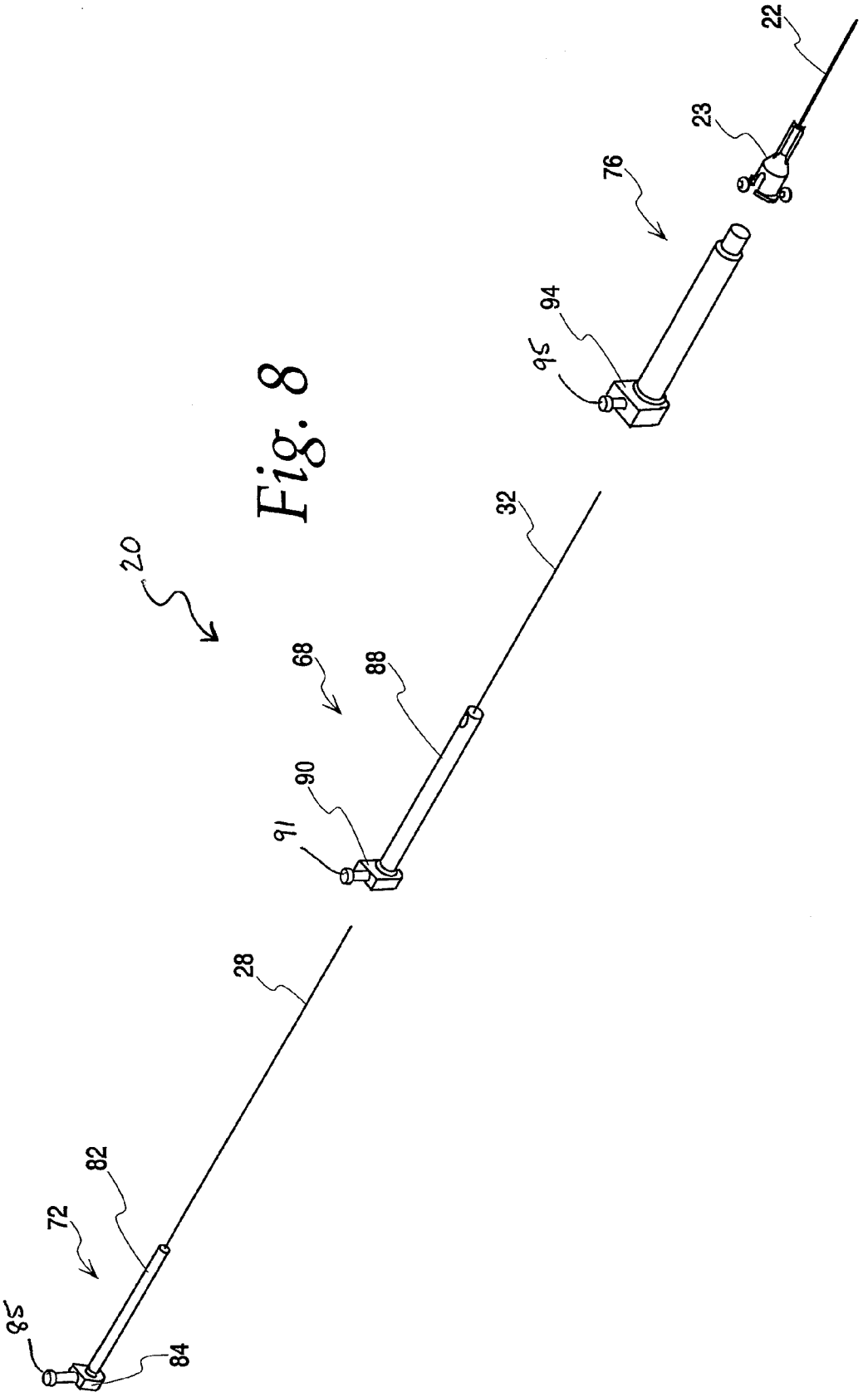

Fig. 8

Fig. 9a

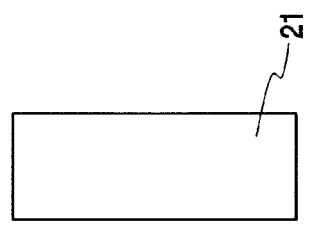

Fig. 9b

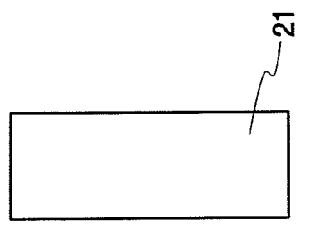

Fig. 9c

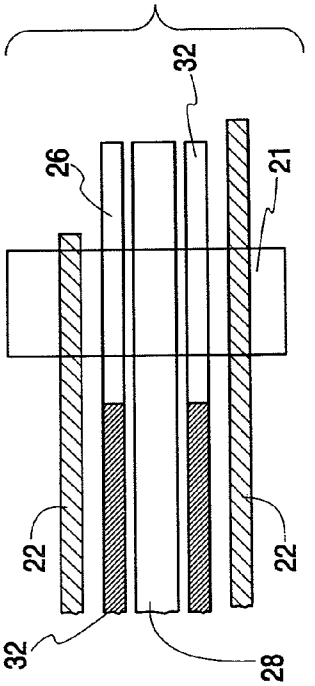

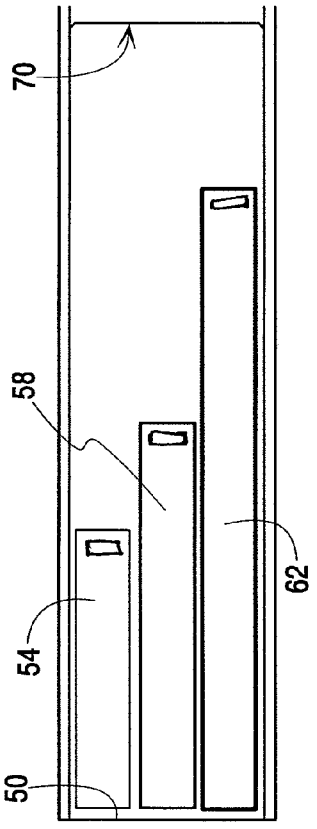

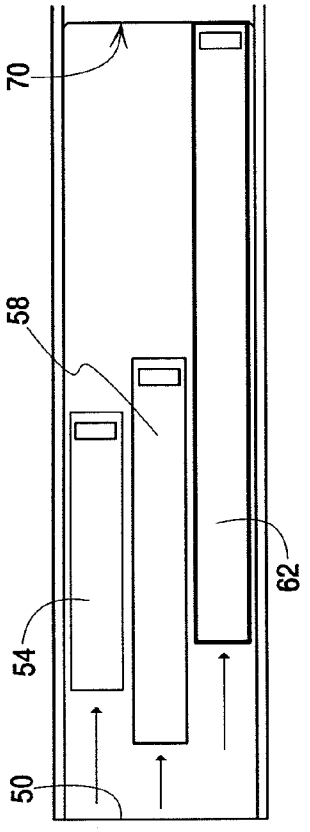

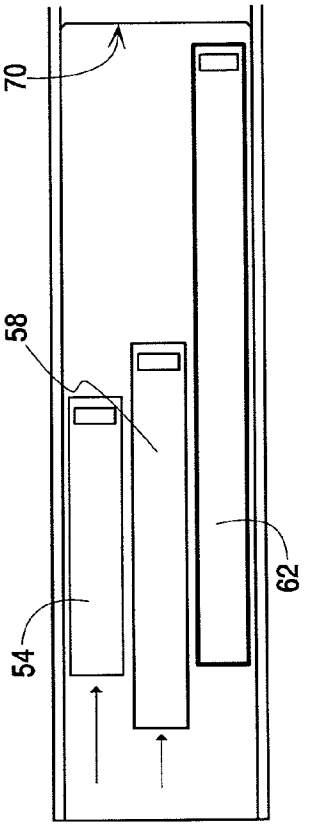

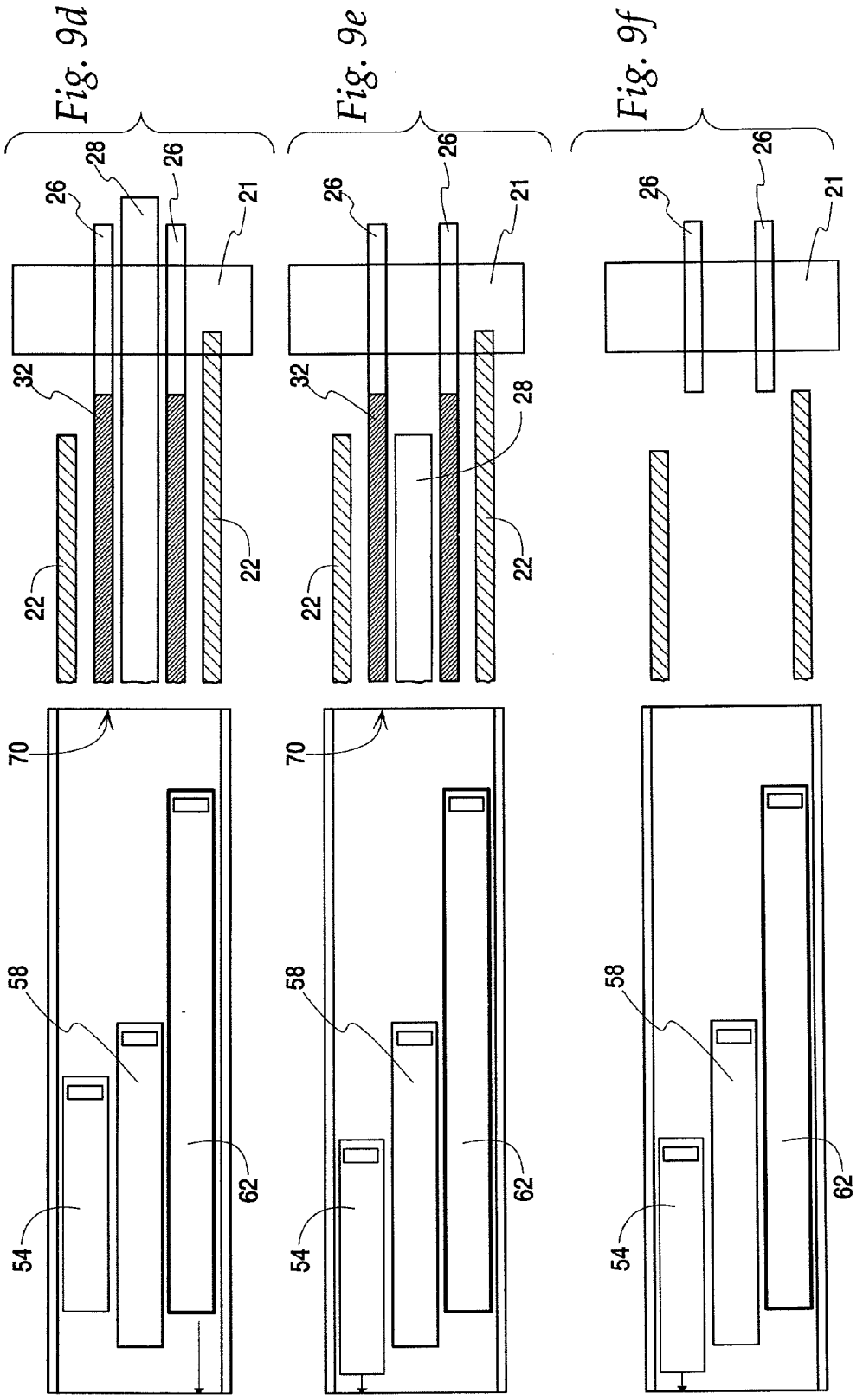
Fig. 9d
Fig. 9e
Fig. 9f
26
28
26
21
32
22
22
70
58
54
62

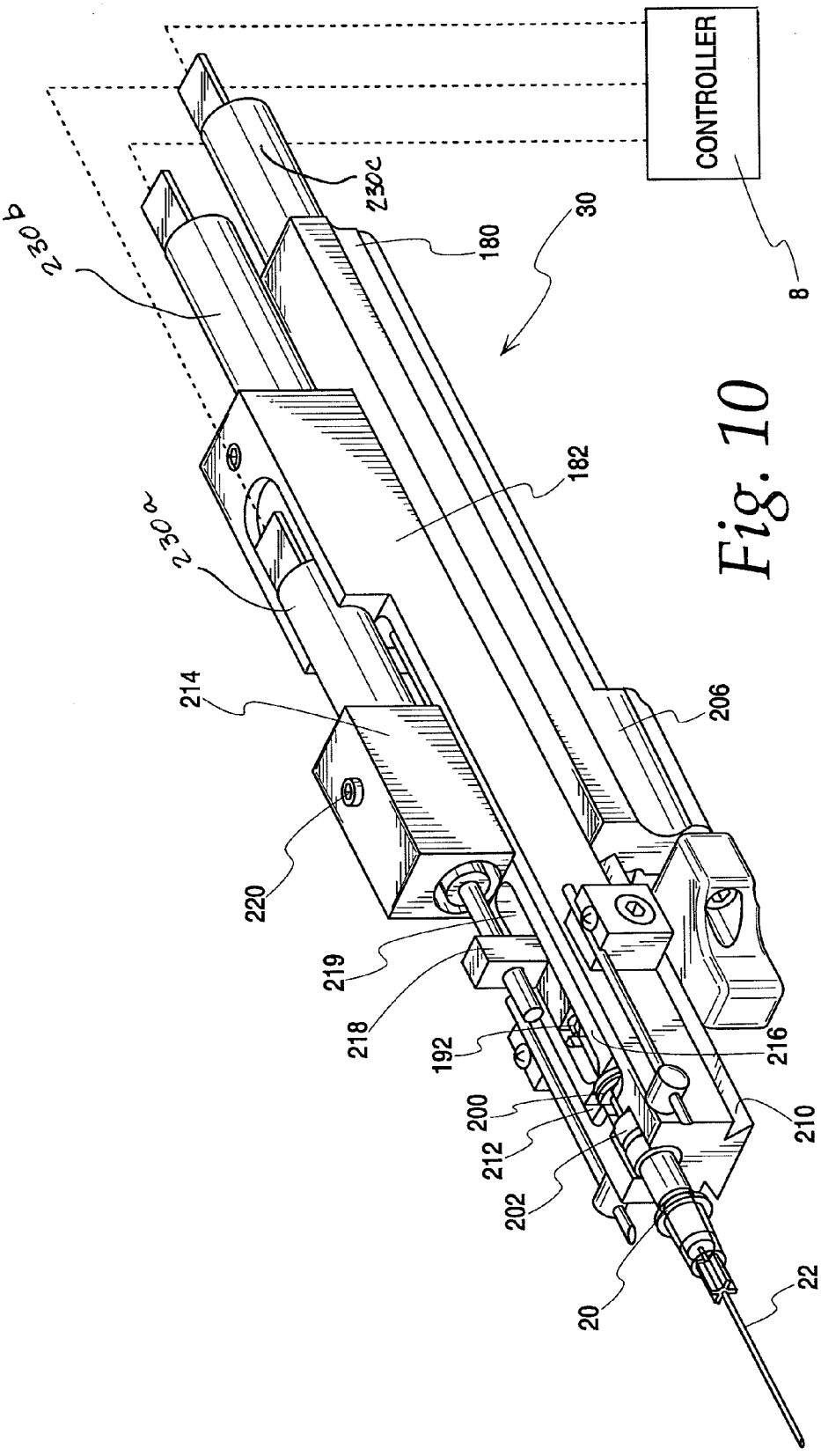
CONTROLLER
8
230b
230c
180
30
182
230a
214
206
220
219
218
192
216
200
210
212
202
20
22

Fig. 10

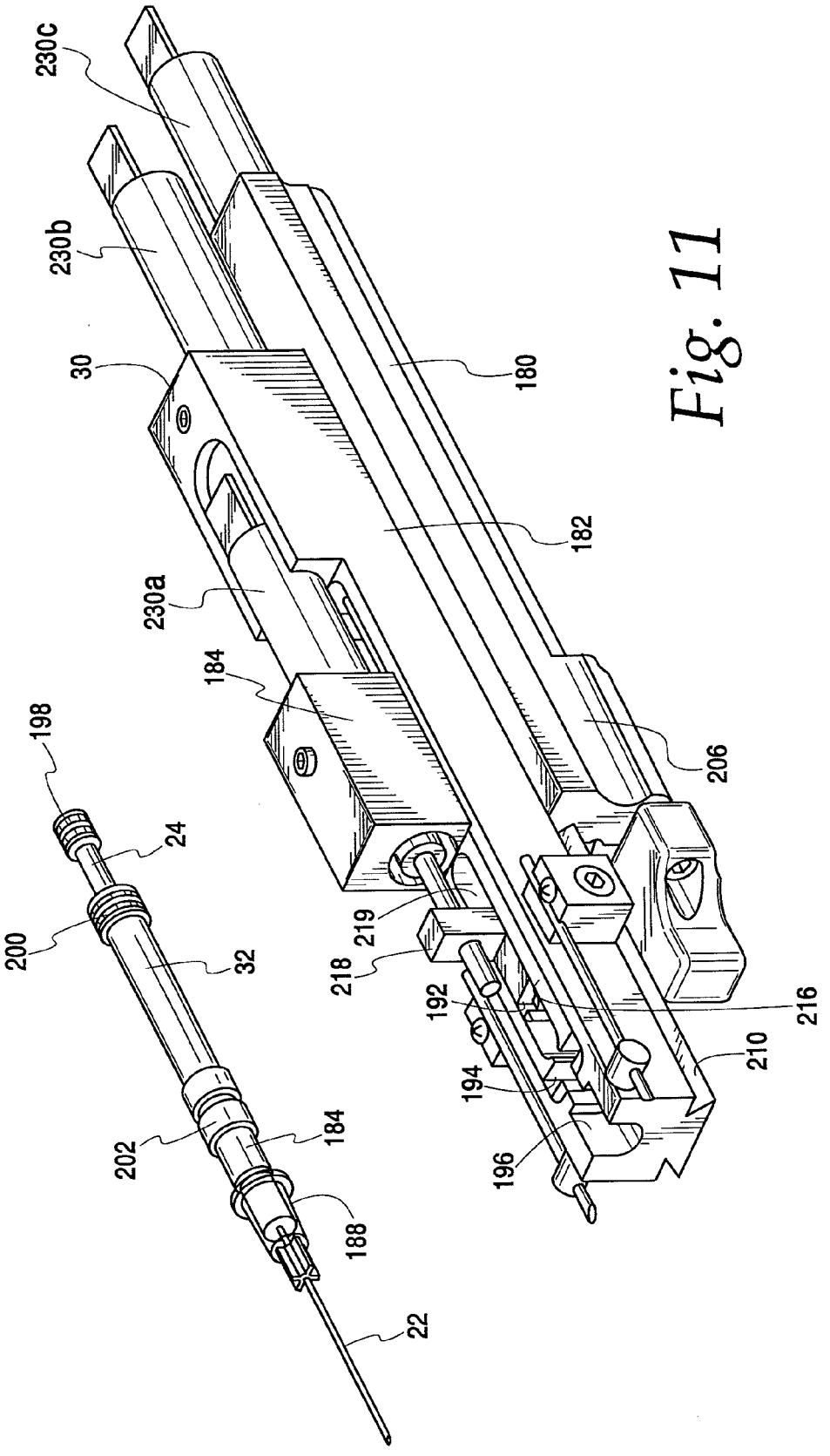
230c
230b
30
180
182
230a
184
198
206
24
200
219
32
218
192
216
210
194
184
202
196
188
22

Fig. 11

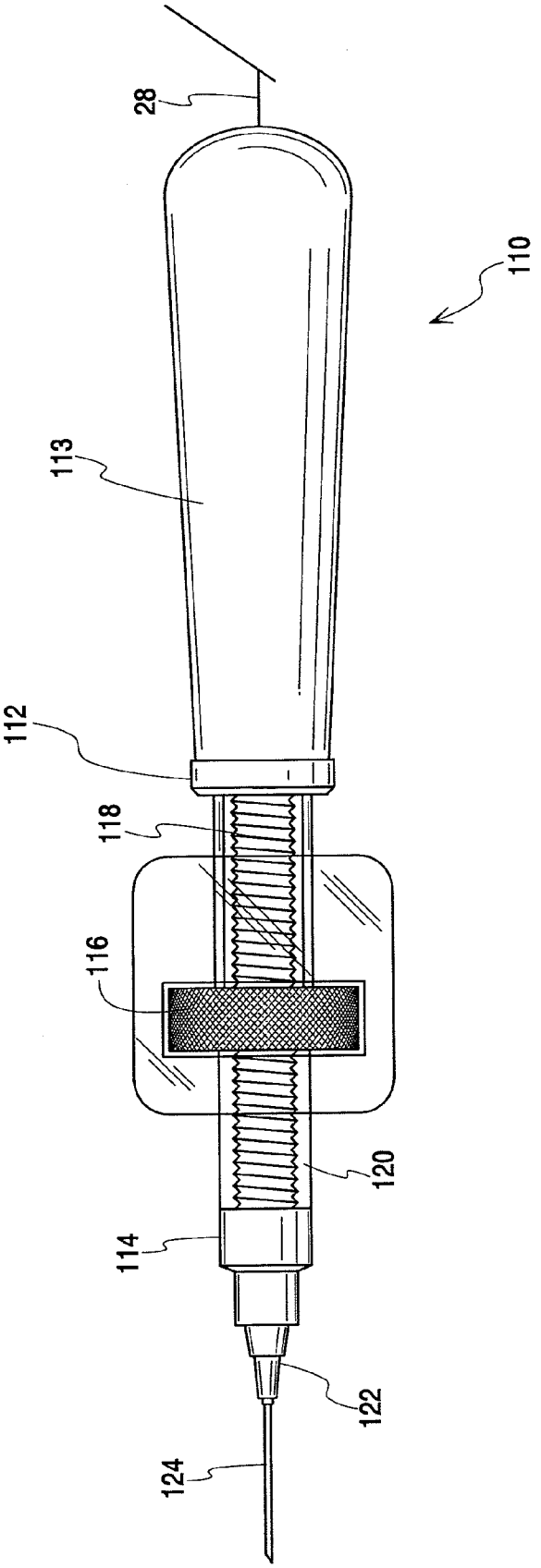

Fig. 12

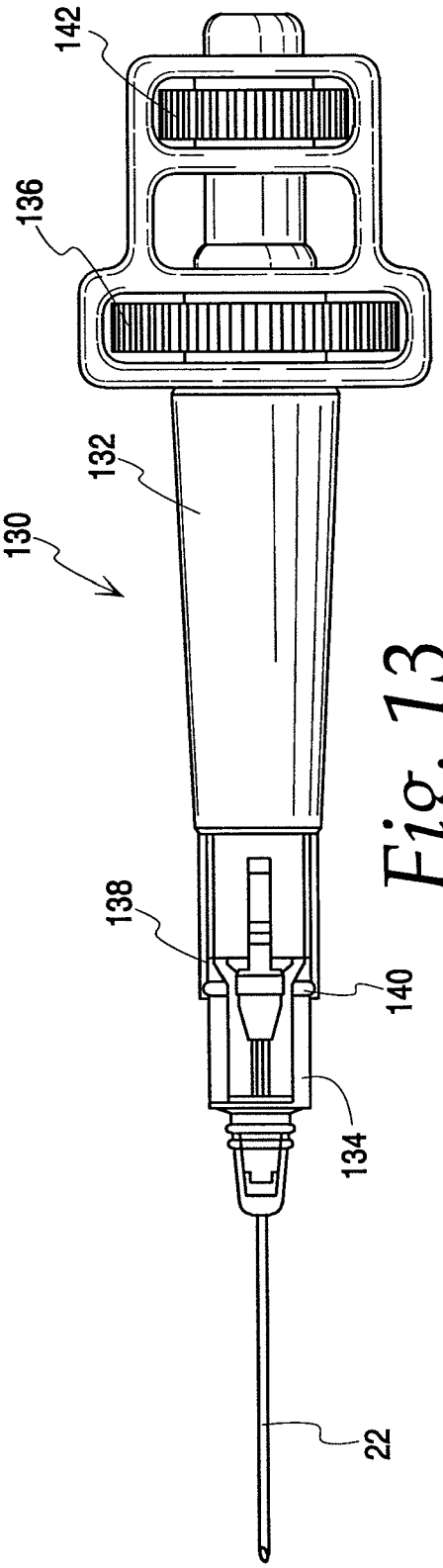

Fig. 13

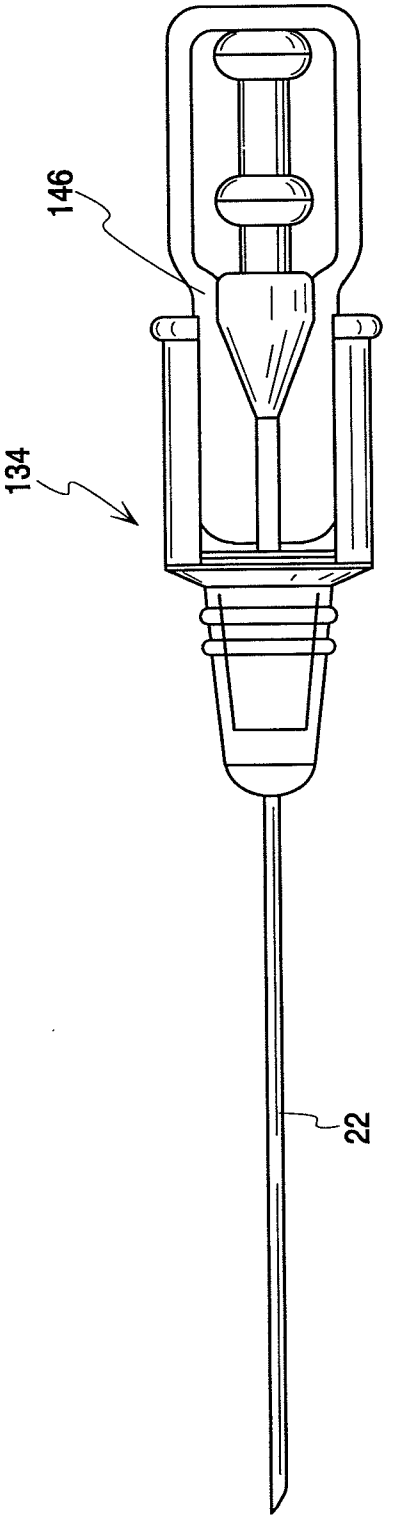

Fig. 14

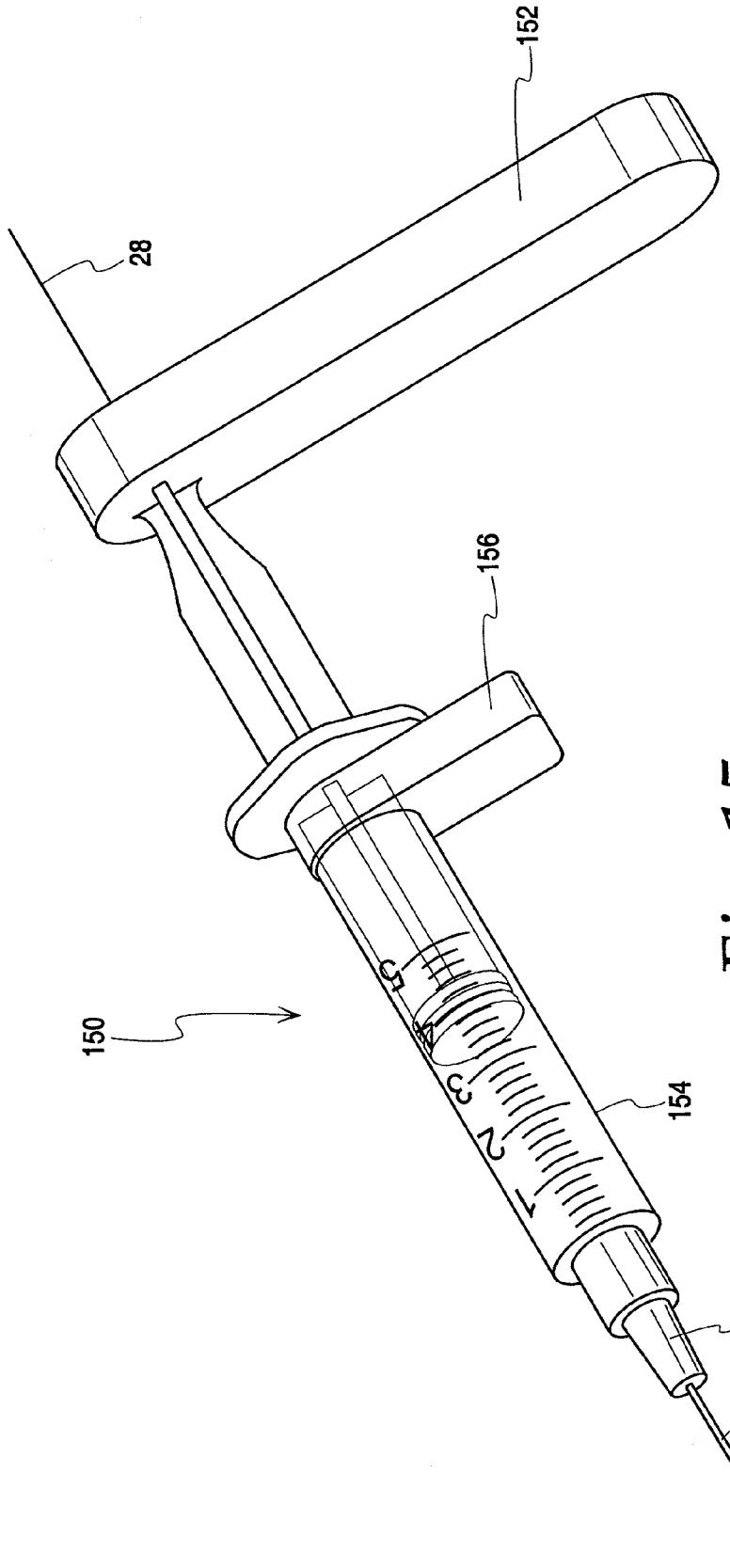

Fig. 15

Fig. 17

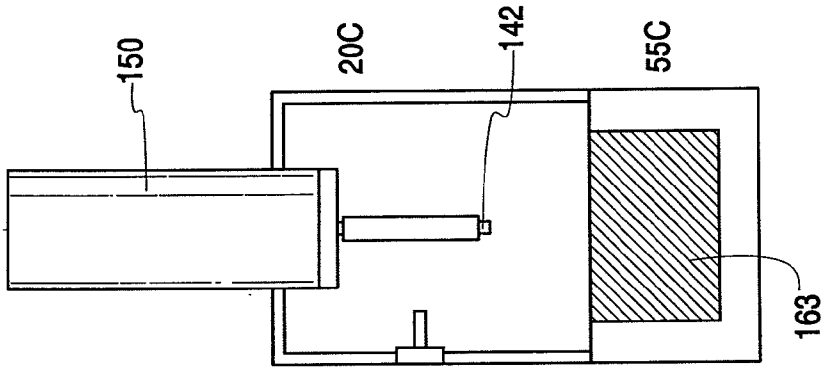

Fig. 16

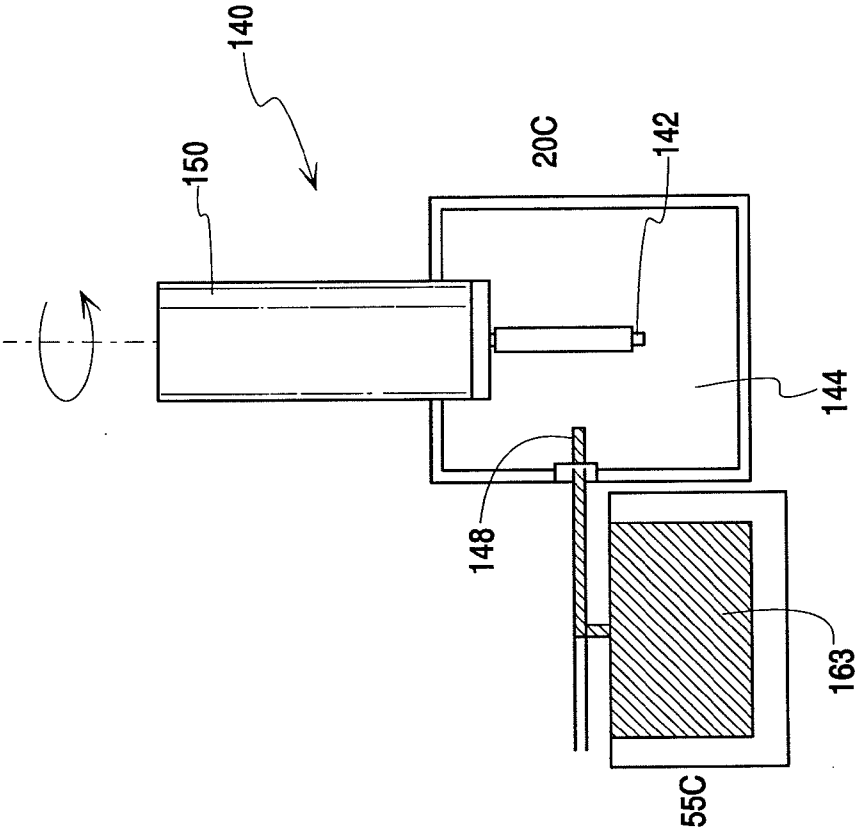

Fig. 18

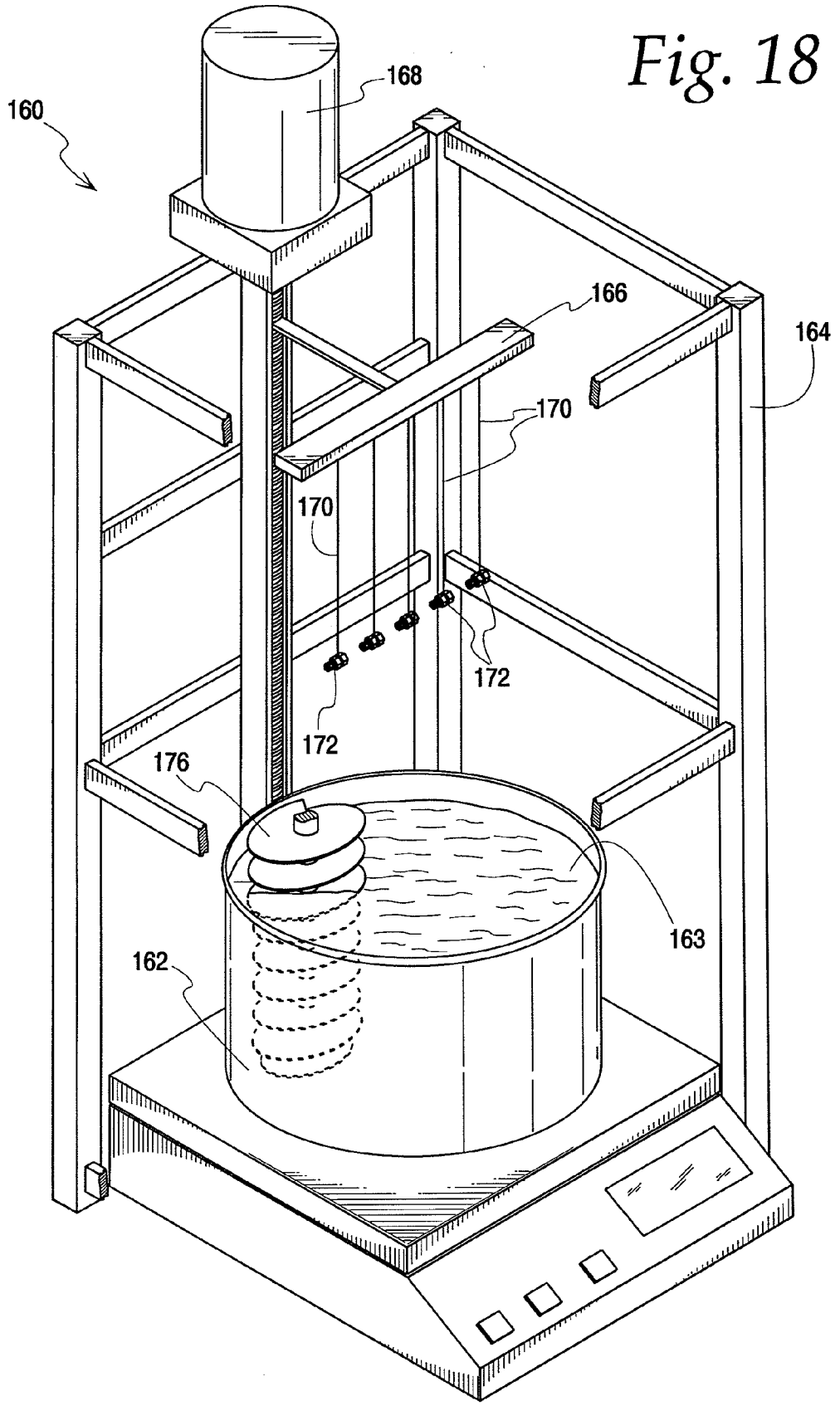

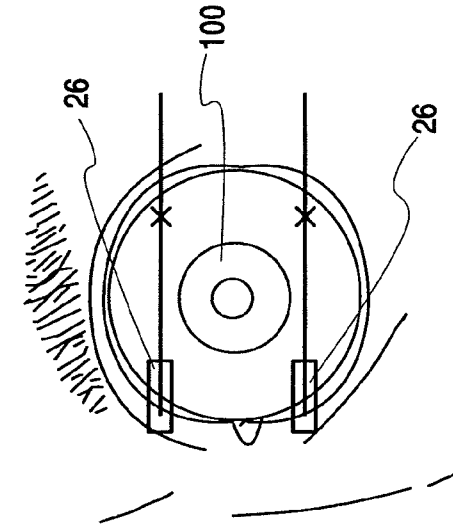

Fig. 21

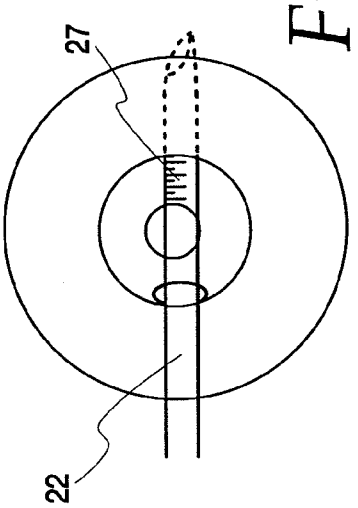

Fig. 19

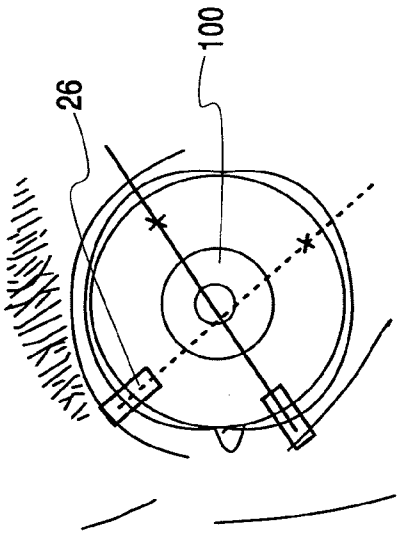

Fig. 20

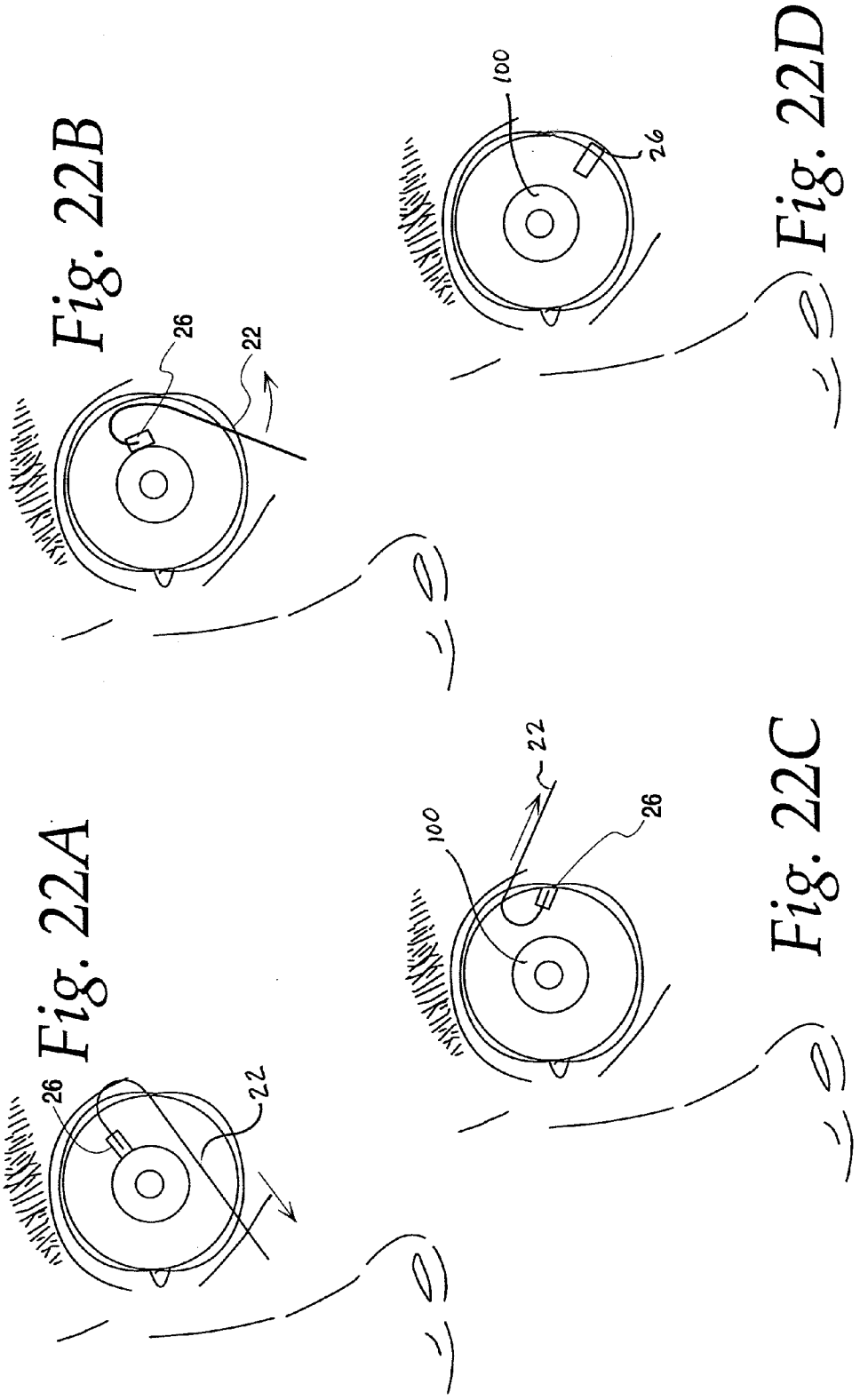
Fig. 22A
26
22
Fig. 22B
26
22
Fig. 22C
100
22
26
Fig. 22D
100
26

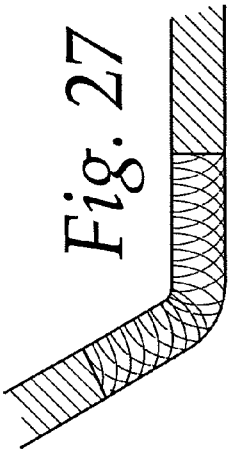

Fig. 27

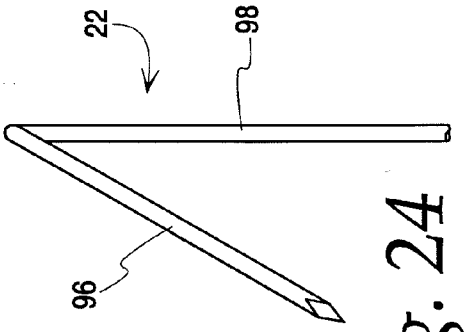

Fig. 24

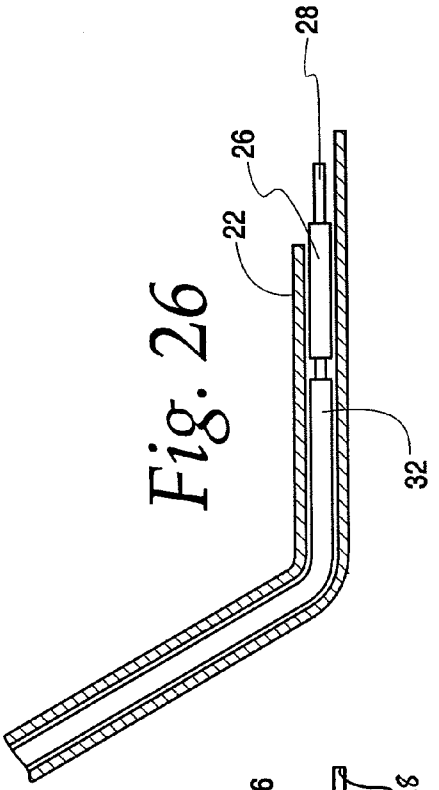

Fig. 26

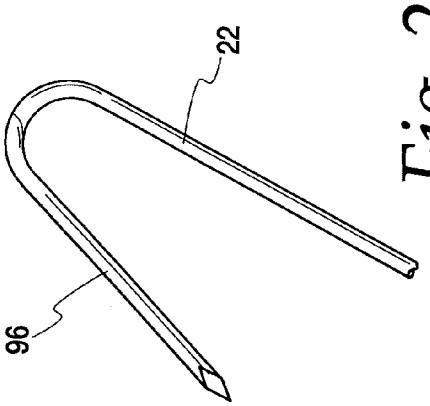

Fig. 23

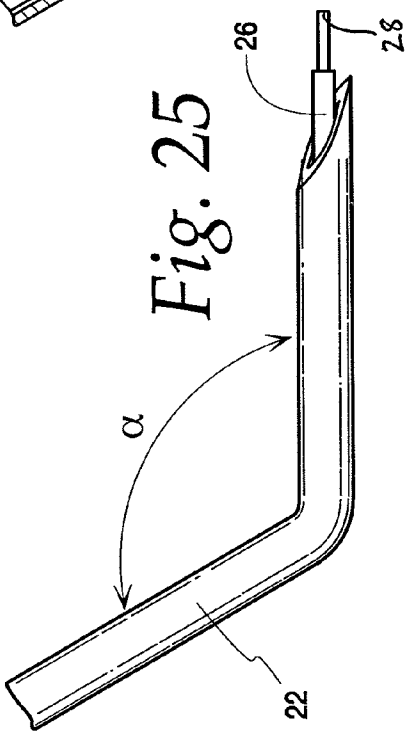

Fig. 25

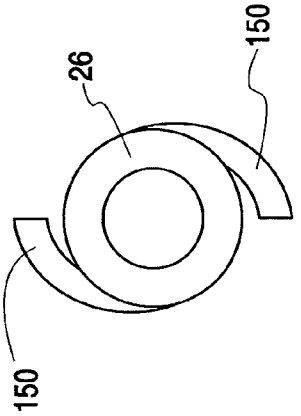

Fig. 30

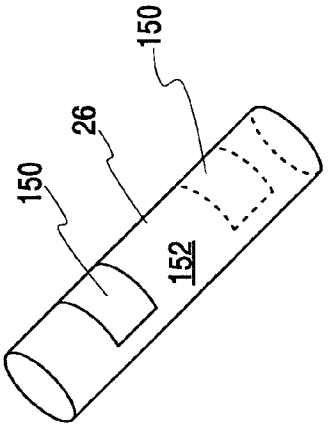

Fig. 29

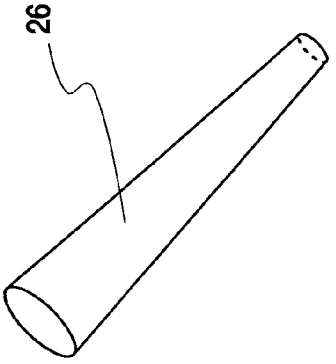

Fig. 28

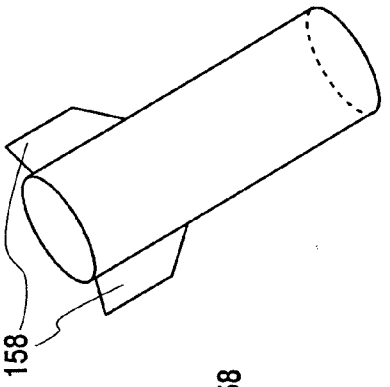

Fig. 32

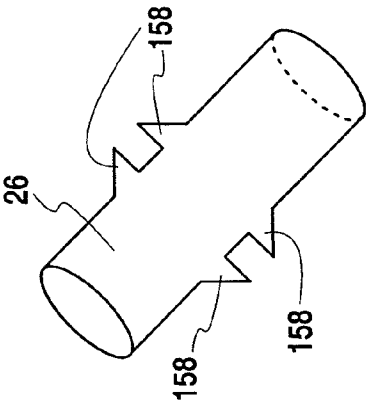

Fig. 31

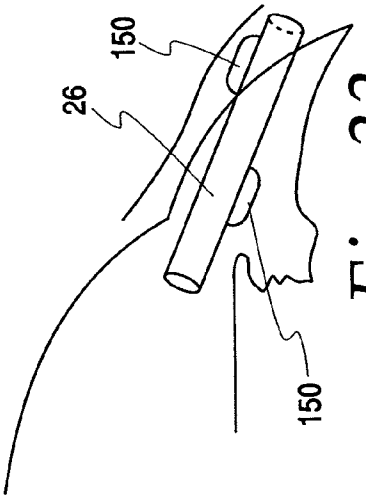

Fig. 33

APPARATUS FOR REDUCING PRESSURE IN AN ORGAN

RELATED APPLICATIONS

[0001] This application is a continuation of U.S. application Ser. No. 11/771,805, filed on Jun. 29, 2007, which claims the benefit of and priority to U.S. Provisional Patent Application No. 60/806,402, filed Jun. 30, 2006, both of which are hereby incorporated by reference in their entireties.

BACKGROUND

[0002] The present disclosure generally relates to methods, systems and apparatus for relieving fluid pressure from an organ such as (but not limited to) the eye. More particularly, the present disclosure relates to methods and apparatus for treating glaucoma by relieving the pressure within the eye.

[0003] Glaucoma is a disease of the eye that affects millions of people. Glaucoma is associated with an increase in intraocular pressure resulting either from a failure of the eye's drainage system to adequately remove aqueous humor from the anterior chamber of the eye or the overproduction of aqueous humor by the ciliary body. The build-up of aqueous humor and resulting intraocular pressure can cause irreversible damage to the optic nerve and the retina, which may potentially lead to irreversible retinal damage and blindness.

[0004] Presently, glaucoma can be treated in a number of different ways, The most widely practiced treatment of glaucoma involves delivery of drugs such as beta-blockers or prostaglandins to the eye (typically in the form of eye drops) to either reduce the production of aqueous humor or increase the flow of aqueous humor from the anterior chamber of the eye. Glaucoma may also be treated by surgical intervention such as trabeculectomy. Trabeculectomy or similar surgical procedures involve creating conduits between the anterior chamber and the various structures involved in aqueous humor drainage such as Schlemm's canal, the sclera, and the subconjunctival space in order to provide a pathway for the aqueous humor to exit the anterior chamber.

[0005] While these methods of treating glaucoma have been generally effective, they are not without their drawbacks. In the case of medicinal treatments of the eye, patient compliance is an issue because such treatments require regular (i.e., daily) intervention. With respect to surgical procedures such as a trabeculectomy, such procedures are very invasive and can cause irreversible changes to the eye. For example, trabeculectomy results in the permanent removal of a segment of the trabecular meshwork, inflammation and scarring in the quadrant of the eye where the surgery was performed, and the formation of a filtering bleb. Implantation of shunts such as the Molteno, Barveldt, or Ahmed shunts induce chronic foreign body reactions and the formation of a chronic subconjunctival bleb. In addition, such surgical treatment of glaucoma often requires long healing times and can result in certain complications such as infection, scarring, hypotony or cataracts.

[0006] More recently, less invasive surgical treatments have been developed. These treatments do not require incision into the conjunctiva of the eye. One example of a less invasive surgical procedure is described in U.S. Pat. No. 6,544,249, the entire disclosure of which is hereby incorporated by reference. U.S. Pat. No. 6,544,249 discloses methods and apparatus for introducing a small bioabsorbable and biocompatible drainage canal, referred to therein as a microfistula tube into the portion of the eye that extends from the anterior chamber to the sub-conjunctival space. The procedure described in U.S. Pat. No. 6,544,249 does not require incision of the conjunctiva. Instead, introduction of the bioabsorbable microfistula tube is accomplished by an ab interno approach—through the cornea of the eye to the desired location (between the anterior chamber and the sub-conjunctival space.) U.S. Pat. No. 6,544,249 also generally describes a delivery apparatus for introducing and implanting the bioabsorbable microfistula tube.

[0007] U.S. Pat. No. 6,007,511, the entire disclosure of which is incorporated herein by reference, likewise discloses less invasive methods and apparatus for treating glaucoma. As in the above-referenced U.S. Pat. No. 6,544,249, a bioabsorbable drainage tube is introduced into the area between the anterior chamber and the sub-conjunctival space to allow drainage of the aqueous humor from the anterior chamber of the eye. As in U.S. Pat. No. 6,544,249, incision of the conjunctiva is not required.

[0008] These new procedures for treating glaucoma offer the promise of a long term cure of glaucoma without the shortcomings of medicinal treatments and without the risks associated with the known and presently practiced surgical procedures described above. Accordingly, it would be desirable to provide improved methods, systems, channels and delivery apparatus for treating glaucoma specifically and for treating other conditions where drainage of accumulated liquid is desired or required.

SUMMARY OF THE INVENTION

[0009] The present disclosure sets forth improved methods and apparatus for carrying out channel implantation into an organ of the body such as the eye. It will be appreciated that the methods and apparatus described below may also find application in any treatment of a body organ requiring controlled drainage of a fluid from the organ. Nonetheless, the methods and apparatus for performing such treatment will be described relative to the eye and, more particularly, in the context of treating glaucoma.

[0010] The present disclosure relates to an implantable, microfistula channel. The channel has a bioabsorbable body defining an interior flow path. The channel body is made of cross-linked bioabsorbable material such as gelatin and has an expandable outer diameter. The flow path has a diameter of between approximately 50 and 250 microns (μm).

[0011] The present disclosure also relates to a method of making an implantable channel. The method includes providing a source of a bio-compatible gelatin solution and providing a generally cylindrical solid support. The support has a diameter of approximately 50 to 250 microns. The method includes contacting the outer surface of the support with the gelatin for a period of time sufficient to coat the support outer surface. A hollow gelatin tube is thus formed on the support. The formed hollow gelatin channel may be dried (cured) for a selected period of time and the formed gelatin tube may be subjected to a cross-linking treatment. The formed and cross-linked gelatin tube is removed from the support.

[0012] The present disclosure also relates to an implantation apparatus for implanting a channel into an organ of a subject. The apparatus includes a reusuable portion that includes an apparatus housing. The housing has an open distal end, a proximal end and an interior chamber. The apparatus includes an arm subassembly within the housing that includes one or more movable arms adapted to engage a disposable

needle assembly. The apparatus further includes one or more drivers coupled to said one or more moveable arms of the arm sub-assembly.

[0013] The present disclosure further relates to systems for implanting a channel into an organ of a subject. The system includes a reusable portion adapted to receive a needle assembly and a disposable portion that includes a needle assembly. The needle assembly has a hollow needle terminating in a sharpened tip and a guidewire and a plunger disposed within the needle. The system includes a microprocessor-based controller including pre-programmed instructions for selective movement of at least the guidewire and the plunger.

[0014] The present disclosure further relates to methods of implanting a bioabsorbable channel into an organ of a subject. In the methods described herein, an implantation apparatus including a hollow needle having a pointed distal end, a bioabsorbable channel within the needle assembly and a plunger proximally located relative to the channel is provided. The method includes the steps of introducing the pointed tip of the needle end assembly into the organ of a subject, advancing the needle to the desired area of implantation and actuating the plunger to advance the channel to the desired area of implantation. The method further includes removing the needle from the organ.

BRIEF DESCRIPTION OF THE DRAWINGS

[0015] FIG. **1**, depicts, in general, a method for implanting a channel, showing in cross section, the distal end of an implantation apparatus;

[0016] FIG. **2** is an enlarged, schematic view of the distal end of one embodiment of an implantation apparatus described herein;

[0017] FIG. **3** is a perspective view of one embodiment of a handheld implantation apparatus with the door opened and a needle assembly installed therein;

[0018] FIG. **4** is a top view of the apparatus of FIG. **3** with front door removed;

[0019] FIG. **5** is an exploded view of the system for implanting a channel including the apparatus FIG. **3**;

[0020] FIG. **6** is a perspective view of the distal end of the apparatus of FIG. **3** with the needle assembly separated therefrom;

[0021] FIG. **7** is an enlarged perspective view of the needle assembly of FIG. **6**;

[0022] FIG. **8** is an exploded view of the needle assembly of FIG. **7**;

[0023] FIG. **9**(*a*)-(f) are schematic views of the implantation apparatus of FIG. **3** showing the plunger, guidewire and needle arms in different positions during the positioning and/or implantation steps as they correspond to the positions of the plunger, guidewire, needle and channel within the eye;

[0024] FIG. **10** is a perspective view of another embodiment of an implantation apparatus with the needle assembly installed therein;

[0025] FIG. **11** is a perspective view of the implantation apparatus of FIG. **10** and the disposable needle assembly in its extended state and separated therefrom;

[0026] FIG. **12** is a side view of another embodiment of a handheld and manually operated implantation apparatus;

[0027] FIG. **13** is a side view of still another embodiment of a handheld and manually operated implantation apparatus;

[0028] FIG. **14** is an enlarged side view of the needle assembly of the apparatus of FIG. **13**;

[0029] FIG. **15** is a perspective view of a syringe type, manually operated, handheld implantation apparatus;

[0030] FIG. **16** is a schematic illustration of a method and apparatus for making a gelatin microfistula channel in the form of a tube;

[0031] FIG. **17** is a schematic illustration an alternative embodiment of an apparatus for making a gelatin microfistula tube;

[0032] FIG. **18** is a perspective view of an apparatus for making a plurality of microfistula gelatin tubes.

[0033] FIG. **19** is a front view of a graduated needle inserted into the eye of a patient;

[0034] FIG. **20** is a front view showing a transpupil channel insertion and placement;

[0035] FIG. **21** is a schematic view showing an ipsilateral tangential channel insertion and placement;

[0036] FIG. **22**(*a*)-(*d*) depicts a series of steps showing an ipsilateral normal channel insertion and placement using a U-shaped or otherwise arcuate needle;

[0037] FIG. **23** is a perspective view of a U-shaped needle of the type shown in the method of insertion and placement shown in FIGS. **22**(*a*)-(*d*);

[0038] FIG. **24** is a front view of the U-shaped needle of FIG. **23**;

[0039] FIG. **25** is a side view of a needle having a bend at its distal end portion including the guidewire and channel inserted therein;

[0040] FIG. **26** is a cross-sectional view of the needle, guidewire, plunger and channel of the needle distal end portion of FIG. **25**;

[0041] FIG. **27** is a side view of the needle, the plunger or guidewire of FIG. **25**, wherein a portion of the plunger or guidewire facilitates bending of the same;

[0042] FIG. **28** is a perspective view of a cylindrical channel including a tapered end;

[0043] FIG. **29** is a perspective view of a cylindrical channel including retaining tabs for limiting migration of the channel;

[0044] FIG. **30** is an end view of the tabbed channel of FIG. **29**;

[0045] FIG. **31** is a perspective view of a cylindrical channel including centrally located barbs to limit migration of the implanted channel;

[0046] FIG. **32** is a perspective view of a cylindrical channel including barbs located at one of the implanted channel to limit migration thereof;

[0047] FIG. **33** shows the tabbed channel of FIGS. **29-30** inserted within the eye of the patient.

DETAILED DESCRIPTION OF THE INVENTION

[0048] Methods and apparatus for delivering and implanting bioabsorbable tubes or shunts are generally disclosed in U.S. Pat. Nos. 6,544,249 and 6,007,511, both of which have been previously incorporated by reference in their entireties. As set forth therein, and also with reference to FIG. **1**, an implantation apparatus **10** is used to deliver and implant a small micro-sized bioabsorbable tube i.e., the microfistula tube **26**, to an area between the anterior chamber **16** and the sub-conjunctival space **18** of the eye **12**. The implanted microfistula tube **26** provides a channel that continuously drains aqueous humor from anterior chamber **16** at a desired rate. Microfistula tube **26** remains implanted in the eye, and eventually dissolves.

[0049] FIG. **1** illustrates the distal (i.e., "working end") end of the apparatus **10** (including the microfistula tube **26**) as it approaches the eye **12** as described in U.S. Pat. No. 6,544,249. Unlike current trabeculectomy procedures, in accordance with the method shown in FIG. **1**, needle **22** housing microfistula tube **26** approaches and enters the eye through cornea **19** (ab interno) and not through the conjunctiva **14** (ab externo). This prevents damage to the conjunctiva, improves healing time and reduces the risk of complications that may result from other surgical techniques of the prior art (e.g., trabeculectomy). As further shown and described in U.S. Pat. No. 6,544,249 and in FIG. **1**, hollow needle **20** is introduced through the cornea **19** and is advanced across the anterior chamber **16** (as depicted by the broken line) in what is sometimes referred to as a transpupil implant insertion. Channel **26** is eventually implanted in the area spanning the sclera **21**, anterior chamber **16** and the sub-conjunctival space **18** (see also FIG. 8 of U.S. Pat. No. 6,544,249).

[0050] The methods, systems, apparatus and channels described herein likewise utilize a hollow needle and a bioabsorbable channel delivered by the needle ab interno through the cornea **19** or the surgical limbus **17**. As used herein, the term "channel" includes hollow microfistula tubes similar to the type generally described in U.S. Pat. No. 6,544,249 as well as other structures that include one or more flow paths therethrough.

[0051] Turning now to a discussion of the methods, systems, apparatus and channels that embody the present invention, as generally shown in FIG. **2**, the working end of implantation apparatus is provided as a needle assembly **20** that includes a hollow needle **22** defining an inner chamber **23** and terminating in a sharpened tip. Placed within inner chamber **23** of the hollow needle **22** is a cylindrical inner tube or plunger **32** that is coaxial with needle **22**. In the loaded and ready to use condition, channel **26** is also placed or otherwise disposed within the hollow chamber **23** of needle **22** and is distally located relative to plunger **32**. Both channel **26** and plunger **32** may be placed over and supported by optional guidewire **28**. As described in U.S. Pat. No. 6,544,249 and in this disclosure, through relative movement of needle **22**, plunger **32**, guidewire **28**, and channel **26** can be implanted into eye **12**. As noted above, guidewire **28** is optional and may be omitted where placement and advancement of channel **26** does not require one.

[0052] As will be described in greater detail below, channel **26** may be delivered to and implanted within the desired location of the eye in any one of several different ways. The method of implantation (and system) may be fully automated, partially automated (and, thus, partially manual) or completely manual. For example, in a fully automated procedure, channel **26** may be delivered by robotic implantation whereby a surgeon controls the advancement of needle **22**, plunger **32**, optional guidewire **28** and, as a result, channel **26** by remotely controlling a robot. In such fully automated, remotely controlled procedures, the surgeon's hands typically do not contact implantation apparatus **10** during the surgical procedure.

[0053] Alternatively, channel **26** may be delivered to the desired area of the eye with a "handheld" implantation apparatus, embodiments of which are shown in FIGS. **2-15** and described below. In one example of a handheld implantation apparatus, discussed in more detail below, movement of the channel **26**, needle **22**, and plunger **32** and optional guidewire **28** may be controlled remotely by an operator using a microprocessor-based device i.e., "controller," while implantation apparatus **10** is physically held by the surgeon. Insertion of the needle into the eye as well as certain repositioning or adjusting steps may be performed manually by the surgeon.

[0054] In the case of fully manual apparatus and methods, which are also discussed below and shown in FIGS. **12-15**, all of the positioning, repositioning, adjusting and implantation steps are performed manually by the surgeon.

[0055] One example of an implantation apparatus **10** and system embodying the present invention is shown in FIGS. **3-9**. Although apparatus **10** shown in FIGS. **3-9** is preferably a handheld type implantation apparatus where relative movement of the needle, optional guidewire and plunger is accomplished automatically by pre-programmed instructions in a microprocessor-based controller and at least some of the steps may be manually performed by the surgeon, apparatus **10** can also be used in a fully automated environment. In any event, implantation apparatus **10** shown in FIG. **3** includes a reusable portion **30** and a disposable portion embodied in needle assembly **20**. As will be discussed in greater detail below, needle assembly **20** is separately provided and is received by arm sub-assembly **55** of implantation apparatus **30**.

[0056] As shown in FIG. **3**, implantation apparatus **10** includes a generally cylindrical body or housing **34**, although as will be appreciated from other embodiments disclosed herein, the body shape of housing **34** is not critical. However, if apparatus **10** is to be held by the surgeon (i.e., a handheld apparatus) the shape of housing **34** should be such that is ergonomical, allowing for comfortable grasping by the surgeon. Housing **34** is closed at its proximal end by end cap **38** and has an opening **39** at its distal end through which at least a portion of needle assembly **20** extends. Door **36** provides access to the interior of housing **34** allowing for easy insertion and removal of needle assembly **20**. Locking means such as slide lock **37** may be provided to secure door **36** to (and release door **36** from) housing **34**. Door **36** may be secured to housing **34** by a hinge **41** allowing the door to swing open when it is unlocked. In an alternative embodiment, door **36** may be slidably attached to housing **34** and access to the interior of housing **34** may be achieved by sliding door **36** toward the proximal end of the housing **34**. Of course, it will be appreciated that other ways of providing access to the interior of the implantation apparatus **10** are also possible.

[0057] Housing **34** and door **36** may be made of any material that is suitable for use in medical devices. For example, housing **34** may be made of a lightweight aluminum or, more preferably, a biocompatible plastic material. Examples of such suitable plastic materials include polycarbonate and other polymeric resins such as Delrin® and Ultem®. Similarly, door **36** may be made of a plastic material such as the above-described materials including polymers and polymer resins such as polycarbonate, Delrin® and Ultem®. In a preferred embodiment, door may be substantially translucent or transparent.

[0058] Re-usable portion **30** of implantation apparatus **10** houses the components required to effect movement of the needle assembly **20** components during the implantation procedure. As shown in FIGS. **3-6**, implantation apparatus **10** houses a plurality of moveable arms, collectively referred to herein as the arm sub-assembly **55**, which is adapted to receive needle assembly **20**. Arms **54**, **58** and **62** are axially moveable between the proximal and distal ends of apparatus **10** and are coupled to lead screws **52**(*a*)-(*c*) at their distal ends which, in turn, are coupled to one or more drivers **44**, **46**, **48**. In the embodiment shown in FIGS. **3-6**, drivers are preferably

a plurality of gear or stepper motors **44**, **46** and **48**. Alternatively, arms may be driven pneumatically or otherwise.

[0059] With respect to the embodiments of FIGS. **3-6**, motors **44**, **46** and **48** are housed near the proximal end of implantation apparatus **10**. Motors **44**, **46** and **48** may be stacked or bundled in parallel in the manner shown in FIG. **5** and held in place by front motor mount **50** and rear motor mount **40**.

[0060] As indicated above, each of the motors **44**, **46** and **48** (or other drivers) is coupled to one of the lead screws **52**(*a*)-(*c*), which, in turn, are coupled to movable arms **54**, **58** and **62** of arm sub-assembly **55**. For example, with specific reference to the embodiment of FIGS. **3-6**, lead screw **50**(*a*) is coupled to guidewire arm **54**; lead screw **50**(*b*) is coupled to plunger arm **58**; and lead screw **50**(*c*) is coupled to needle arm **62**. Motors **44**, **46** and **48** may be selectively and independently activated by switches on the apparatus **10** itself or as schematically shown in FIG. **5** as described, may be coupled to a remote controller **8** of the system. In one embodiment, apparatus **10** includes printed circuit board **7** which establishes an electrical connection between motors **44**, **46** and **48** and controller **8**. Controller **8** may include a control box that supplies power and pre-programmed positioning instructions to the implantation apparatus **30** generally and motors **44**, **46** and **48**, specifically. Movements of the various arms **54**, **58** and **62** can be initiated by the surgeon via a foot switch or other type of remote control **6**.

[0061] As shown in the Figures, arms **54**, **58** and **62** are preferably of varying axial lengths. Each of the arms **54**, **58** and **62** includes a slot for receiving a portion of the needle assembly **20** (described below.) Thus, guidewire arm **54** includes a guidewire hub slot **57**; plunger arm **58** includes a plunger hub slot **59** and needle arm **62** includes a needle hub slot **63**.

[0062] In a preferred embodiment, each of the arms **54**, **58** and **62** includes at its distal and/or proximal ends a portion having an enlarged cross-section. The distal "blocks" **54**(*a*), **58**(*a*) and **62**(*a*) provide abutment surfaces which limit axial movement of the respective arms. As will be seen from the discussion of the implantation method, the distal blocks which also define slots **59**, **62** and **63** limit movement of the particular arms, thereby ensuring that the guidewire, plunger and channel **26** do not move beyond a pre-determined distance. Similarly, wall **65** of housing **34** limits movement of needle arm **62**, likewise ensuring that the needle does not penetrate the eye beyond a desired distance. Proximal blocks **58**(*a*), **58**(*b*) and **58**(*c*) (not shown) likewise provide an abutment surfaces for contacting fixed collars **53** on lead screws **52**(*a*)-(*c*). Contact between the surfaces of blocks **58**(*a*), **58**(*b*) and **58**(*c*) and respective collars **53** provides an indication that arms of arm subassembly **55** are in their rearmost or "hard stop" position, discussed below. Blocks **58**(*a*)-(*c*) also include internal threaded nuts through which lead screws **50**(*a*)-(*c*) travel.

[0063] As further seen in FIGS. **3-6**, implantation apparatus **10** includes a guide block **66** attached to needle arm **62**. Guide block **66** defines two partially enclosed apertures for slidably retaining guidewire arm **54** and plunger arm **58**. Guide block **66** prevents rotation or other undesired dislocation of guidewire arm **54** and plunger arm **58** and maintains these components in an axially aligned orientation. Guide block **66** also serves as a stop that limits movement of arms **54** and **58**.

[0064] As noted above, arm sub-assembly **55** is adapted to receive needle assembly **20**. Needle assembly, shown in FIGS. **7** and **8** is itself made of a plurality of separate, and co-axially assembled parts. Co-axial assembly of these constituent parts allows for relative axial movement of optional guidewire **28**, needle **20** and plunger **32**. As shown in FIGS. **7** and **8**, in one embodiment, needle assembly includes a guidewire hub **72**. In the embodiment shown, guidewire hub **72** includes a distal cylinder **82** and a proximal block **84**. Guidewire **28** extends from the cylinder **82** and is received within plunger hub **68** which likewise includes a distal hollow cylinder and proximal block **90**. Plunger tube **32** extends from plunger cylinder **88** and when brought together with guidewire hub **72** surrounds guidewire **86** along most of its length. Both guidewire **28** and plunger tube **92** are then received by needle hub **96**. A hollow needle **22** attached to needle mount **23** is mounted on needle hub **96**. Hollow needle **22** has an inner diameter sufficient to receive the assembled co-axial guidewire **86** and plunger **92**. Of course, it will be appreciated that in certain embodiments, a guidewire may not be required and that needle assembly **20** may include a plunger and needle only.

[0065] As best shown in FIG. **6**, needle assembly **20** is adapted for placement within arm assembly **55**. More specifically, guidewire block **84**, plunger block **90** and needle block **94** of needle assembly **20** are received by the slots **57**, **59** and **63**, respectively, of arm sub-assembly **55**. Each of blocks **84**, **90** and **94** may include an upstanding pin **85**, **91** and **95** (respectively). Pins **85**, **91** and **95** are of a height sufficient so as to almost contact the inner surface of door **36** (when closed). Providing pins of sufficient height keeps needle assembly from becoming dislodged from sub-assembly **55** in the event that apparatus **10** is rotated by the surgeon. As shown in FIGS. **7** and **8**, hollow needle **22** is preferably protected prior to use by removable needle cap **80**.

[0066] Another embodiment of a handheld implantation apparatus is shown in FIGS. **10-11**. As in the embodiment described above, hand-held implantation apparatus **10** of FIG. **10** includes a reusable portion **30** that includes handle **180**, movable block **182** and slider assembly **214**. As with the embodiment of FIGS. **3-9** above, needle assembly **20**, itself includes several different components that can be preassembled (as shown in FIG. **10**) and are axially movable relative to one another. For example, in the embodiment shown in FIG. **10**, needle assembly **20** includes plunger **32**, needle adapter **184** and guidewire holder **24**. Plunger **32** has a hollow cylindrical body which has an open distal end and an open proximal end. Open proximal end of plunger **32** receives guidewire **28** and guidewire holder **24**.

[0067] As further shown in FIG. **10**, distal end of plunger **32** is received by hollow needle adapter **184** and needle adapter **184** receives disposable needle **22**. Needle **22** includes a distal piercing end and a hub **188** which is fitted over needle adapter **184**. Once assembled, guidewire extends from guidewire holder **24** through plunger **32**, through needle adapter **184** and needle **22**. In the embodiments of FIG. **10**, channel **26** is typically placed on guidewire **28** near the distal end thereof within hollow needle **22**.

[0068] Needle assembly **20** is mounted onto reusable handheld portion **30**. More particularly, as shown in FIG. **3**, needle assembly is fitted into slots **192**, **194** and **196** of implantation apparatus **30**. For example, collar **198** of guidewire holder **24** is received within slot **192**, collar **200** of intermediate tube **32** is positioned within slot **194**, and collar **202** of needle adapter **34** is received within slot **196**.

[0069] Implantation apparatus **10** includes a handle **180**. Handle **180** preferably includes groove **206** along the side wall for easy gripping by the surgeon. As shown in FIGS. **10** and **11**, handle **204** supports movable slider block **182**. Block **182** includes a slide **210** that fits within a central slot of handle **180**. During use of implantation apparatus **10**, block **182** may move axially within the slot of handle **180**. Movable slider block **182** may also include a slot **212** (see FIG. **10**) which receives plunger block assembly **214**. As shown in the figures, plunger block **214** may be slidable within block **182**. Plunger block assembly **214** includes forwardly extending arms **216** which defines at its distal end a slot **192** (in which collar **25** of guidewire holder **24** is received). Plunger block assembly also includes guidewire slider block **218** that is movable within slot **219** defined by arms **216**. Guidewire slider block **218** is coupled to motor **230** (discussed below) by screw **220**.

[0070] Reusable portion **30** of handheld implantation apparatus **10** generally depicted in FIGS. **10** and **11** may further include drivers for selectively actuating movement of the component parts of needle assembly **20**, such as needle **22**, guidewire **28**, plunger **32**, and channel **26**. As in the embodiment of FIGS. **3-9**, in the embodiment of FIGS. **10** and **11**, the drivers for selectively moving these and other components may be one or more motors, such as gear or stepper motors. Motors **230** may be selectively activated to move the desired component of apparatus **10**. In one non-limiting example shown in FIGS. **10** and **11**, a plurality of stepper motors **230**(*a*), (*b*) and (*c*) are carried by handheld implantation apparatus. Motors **230**(*a*)-(*c*) may be selectively activated by switches on the apparatus itself, remote hand-operated switches, a foot-operated controller and/or an automatically controlled via a preprogrammed controller (i.e., computer) **8**.

[0071] Regardless of the means of control, in the example shown in FIGS. **10** and **11**, motor **230**(*a*) causes movement of guidewire slider block **218**. Movement of guidewire slider block **218** which holds collar **25** of guidewire holder **24** results in selective back and forth movement of guidewire **28**. Motor **230**(*b*) moves arm **216** within slot **212** which holds collar **200** of plunger **32**, allowing for back and forth movement of plunger **32**. Finally, motor **230**(*c*) drives block **182** including the entire needle assembly **20** further including block **214** and its associated components.

[0072] Of course, as described in relation to the embodiment of FIGS. **10-11**, means for advancing or moving the operative components of handheld implantation apparatus **30** of FIGS. **11-12** need not be electrical and/or motor driven. Other embodiments of a handheld apparatus **10** that include other ways for actuating movement of the individual components may also be employed. For example, as shown in FIGS. **12-15**, in alternative embodiments of a handheld implantation apparatus, the apparatus **10** may include mechanical means for selectively advancing the component parts of the needle assembly and the handheld implantation apparatus.

[0073] Turning to FIG. **12**, implantation apparatus **110** includes a reusable handheld portion **112** that receives a disposable needle assembly **114**. Implantation apparatus **110** includes a thumbwheel **116** placed on and movable along threaded screw **118**. Attached to thumbwheel **116** is a syringe body **120**. Distal end of syringe **120** receives needle assembly **122**. Implantation apparatus **110** includes a conduit that extends through the handle **113** and is adapted for receiving guidewire **28**.

[0074] Placement of channel **26** onto guidewire **28** may be achieved by turning thumbwheel **116** in a first direction to retract needle assembly **122** and hollow needle **124**, thereby revealing the distal end of guidewire **28** and plunger tube **32**. At that point, channel **26** is placed (typically manually) on guidewire **28** so that the proximal end thereof (the end opposite the leading end of channel **26**) of channel comes into contact with the distal end of plunger **32**. Thumbwheel **116** is then turned in an opposite direction to the first direction to slide needle **124** over plunger tube **32** and channel **26**.

[0075] Channel **26** is now ready for implantation. During the implantation process, needle **124** is inserted into the eye and, more specifically, the cornea **19** or surgical limbus **17** of the eye in the manner described above and in U.S. Pat. No. 6,544,249. Needle **124** is advanced across anterior chamber **16** and into the sub-conjunctival space **18**, stopping short of the conjunctiva **14**. Thumbwheel **116** is then rotated again in the first direction to retract needle **124** and thereby expose channel **26**. Once in place, guidewire is retracted, releasing microfistula **26** from guidewire **28**. Retraction of guidewire may be achieved manually by a simple pulling of guidewire **28** at the proximal end of apparatus **110**. Once channel **26** is in its final position, needle **124** is removed.

[0076] FIGS. **13** and **14** illustrate another embodiment of a handheld implantation apparatus **130** that likewise utilizes mechanical means for advancing and/or selectively moving the component parts of the needle assembly and/or apparatus **130**. As in the embodiment of FIG. **12**, handheld implantation apparatus relies on mechanically driving the component parts. As shown in FIG. **13**, implantation apparatus **130** includes handle portion **132** with a needle assembly **134** attached to the distal end of body **132**. A thumbwheel **136** is rotatable and coupled to an internal screw (not shown). Internal screw is attached to arms **138** which grasp flange **140** of needle assembly **134**, such that turning of thumbscrew **136** effects axial movement of needle assembly **134**.

[0077] In contrast to the embodiment of FIG. **12**, implantation apparatus **130** may further include additional means for controlling movement of other components of the implantation apparatus. For example, in the embodiment of FIG. **13**, a second thumbwheel **142** is mechanically coupled to guidewire **28**. A rotation of thumbwheel **142** allows for retraction of guidewire **28** after implantation of channel **28**.

[0078] FIG. **14** provides an enlarged view of needle assembly **134** shown in FIG. **13**. As seen in FIG. **14**, an assembly retainer **146** is provided. Assembly retainer **146** is affixed to the needle assembly **134** during shipment to prevent movement of guidewire **28** and control tube. Retainer is removed prior to insertion of the needle assembly **134** onto the handle **132** of apparatus **130**.

[0079] FIG. **15** shows another embodiment of an implantation apparatus. The implantation apparatus **150** of FIG. **8** includes a handle **152**, a movable or slidable syringe portion **154** and a trigger **156** for actuating movement of slidable syringe **124**. Implantation apparatus **150** further includes an attachable needle assembly **158** (with needle **22**) at the distal end of syringe **154**. As shown in FIG. **15**, guidewire **28** extends through implantation apparatus **150** in similar fashion to the apparatus of FIG. **12**. Guidewire **28** extends through barrel **154** and carries a tube **32** near its distal end. Barrel **154** is preferably filled with gas (e.g., air, CO.sub.2, nitrogen or liquid (e.g., water, trypan blue, saline or a viscoelastic solution).

[0080] For placement of channel **26** onto guidewire **28**, trigger **156** is pulled, resulting in rearward movement of syringe **154** and needle **22**. Rearward movement of needle **22**

exposes guidewire **28** and allows for placement of channel **26** onto guidewire. Release of the trigger **158** advances needle **22** to cover guidewire **28** and channel **26**. As in the previous embodiments, needle **22** pierces cornea **19** or surgical limbus **17**, and is advanced through anterior chamber **16** to the desired location of the eye (i.e. the area between the subconjunctival space **18** and the anterior chamber). Trigger **156** is once again pulled to move needle assembly **158** in a rearward direction thereby exposing channel **26** carried by guidewire **28**. Once the surgeon has determined that the channel **26** is in the desired location, guidewire **28** is retracted, thereby releasing channel **26**. As shown in FIG. **15**, retraction of guidewire **28** may be performed manually, as in the embodiment of FIG. **12**, by simply pulling guidewire **28**. Alternatively, mechanical means for moving guidewire, as in the examples of FIGS. **12** and **13**, may also be provided.

[0081] Although selective movement of guidewire **28**, needle assembly, plunger **32** or guidewire holder **24** with the channel **26** using electrical, mechanical or even some manual means have been described, other means for actuating movement of these components may also be used instead of or in addition to such means. For example, movement of the various component parts may be achieved by pneumatic control or fluidic control.

[0082] The method of implanting channel **26** using implantation apparatus will now be described. The method will be described with particular reference to the embodiment of FIGS. **3-9**, although many of the steps described may also be employed using other embodiments of the implantation apparatus. In addition, depending on the type of apparatus and type of channel used, there may be variations to some of the method steps. For example, in some embodiments, a guidewire may be omitted. In addition, the advancement and retraction steps of the parts of needle assembly may be continuous or incremental. Regardless of the apparatus used, the sequence of steps, distances traveled and continuous or incremental movement, the ultimate location of channel **26** is substantially the same using any of the methods, systems and apparatus described herein.

[0083] At the outset, it will be appreciated that the implantation of channel **26** requires precise placement of the channel **26** in the correct location within the eye. Moreover, it will also be appreciated that the distances traveled by the channel **26**, plunger **32**, guidewire **28** and needle **22** are typically measured in millimeters. Such precision may be difficult for even the most skilled surgeon to achieve by manual manipulation (due to natural hand tremors in humans). Accordingly, in embodiments other than the manual hand-held implanters in FIGS. **12-15**, many of the actual implantation steps are preferably carried out under the automatic control of an external, preprogrammed controller **8**. While the initial eye entry steps and some repositioning steps may be performed manually by the surgeon, steps related to the release and location of channel **26** may be automatically controlled.

[0084] In a first step, preferably performed during factory assembly, channel **26** is loaded into needle assembly **20**. During loading, the distal tip of guidewire preferably extends slightly beyond the beveled tip of hollow needle **22**. Channel **26** may be manually placed on guidewire **28** until proximal end of channel **26** contacts the distal end of plunger **32**. Guidewire **28**, with channel **26** placed thereon is then retracted into hollow needle **22**.

[0085] Prior to loading needle assembly **20** into apparatus **30**, pre-positioning of arm-subassembly may be desired or required. Thus, in a first step, all motors are activated to retract guidewire arm **54**, plunger arm **58** and needle arm **62** to a proximal most position such that the proximal end surfaces of the arms abut against collars **53**. This "hard stop" position is shown schematically in FIG. **9***a*. The operator may then prepare implantation apparatus **30** for loading of needle assembly by activating each motor and advancing each arm assembly **55** to a "home" position and shown in FIG. **9**(*b*). As will be seen in FIG. **9**(*b*) movement of needle arm **62** is restricted by wall **70** of apparatus **30**. With the motors properly aligned in the "home" position, needle assembly is installed by inserting guidewire hub block **86** into guidewire hub slot **57**; plunger hub block **90** into plunger hub slot **59** and needle hub block into slot **63**. With needle assembly **20** properly installed, the surgeon may begin the procedure by inserting the end distal tip of hollow needle **22** into the eye. As shown in FIG. **1** and as previously described, the surgeon inserts the hollow needle **22** into the anterior chamber via the cornea or surgical limbus of the eye and advances it either manually (or under automatic control) to a location short of the final implantation site. Alternatively, the surgeon may first make an incision in the eye and insert needle **22** through the incision. Once the needle **22** has been properly inserted and placed, the program may be activated to commence automatic implantation of channel **26**. In a first implantation step, simultaneously motors) **44** and **46** are activated to advance guidewire arm **54** and plunger are **58** as shown in FIG. **9**(*c*) which thereby advances channel **26** forward into the subconjunctival space of the eye, as generally depicted in FIG. **9**(*c*). For example, in one embodiment, plunger **32** and guidewire **28** are advanced approximately a total of 2 millimeters. Preferably, the rate of placement of channel is carefully controlled because it allows the channel to absorb fluid from the surrounding tissue thereby causing it to swell and to provide better anchoring in the tissue. Rapid advancement or placement of microfistula channel **26** may not allow tube **26** to adequately swell which can possibly result in unwanted migration of channel **26** after implantation. In one embodiment, the rate of placement may be between approximately 0.25-0.65 mm/sec.

[0086] After the advancement of the plunger and guidewire described above, motor **48** is activated and needle arm **62** is moved in a rearward direction such that needle **22** is withdrawn from its position shown in FIG. **9**(*c*) to the position shown in FIG. **9**(*d*). Withdrawal of needle **22** should preferably expose the entire length of channel **26**, and, in addition, the distal end of the plunger, thereby allowing the surgeon to visualize the final position of the proximal edge of the channel. In one embodiment, the distance that hollow needle **22** is withdrawn is approximately 4.2 millimeters. At this point, the program prompts (e.g., audibly) the surgeon to visually view the location of channel **26** and determine if it is correctly placed. The surgeon can manually make any adjustments to a desired position by moving the implanter forward or backward. The automatic system may be programmed to allow the surgeon sufficient time to make any further manual adjustments and may require the surgeon to press the foot or other switch or otherwise effect movement to continue delivery of the channel. After a selected period of time, the automated program preferably resumes control of implantation procedure by activating motor guidewire motor **44**, to retract guidewire arm **54** and thus withdraw guidewire **28** as shown in FIG. **9**(*e*). Removal of the guidewire preferably occurs in one single step as shown in FIG. **9**(*e*). Finally, the system will

then preferably alert the surgeon that the procedure is now complete and the needle **22** may be withdrawn (manually or automatically) from the eye as shown in FIG. **9**(*f*).

[0087] From the preceding discussion, it will be appreciated that bioabsorbable microfistula channel is implanted by directing the needle across the anterior chamber, entering the trabecular meshwork (preferably between Schwalbe's Line and the Scleral spur), and directing the needle through the sclera until the distal tip of the needle is visible in the subconjunctival space. The length of the channel through the sclera should be approximately 2-4 mm. Once the surgeon has placed the needle in this location, he may actuate the implanter to begin the release steps. The channel is released and the needle is withdrawn such that approximately 1-2 mm of the channel resides in the sub conjunctival space, approximately 2-4 mm resides in the scleral channel, and approximately 1-2 mm resides in the anterior chamber. Once the channel is released, the surgeon removes apparatus needle **20**.

[0088] Proper positioning of the bioabsorbable channel **26** should be carefully controlled for at least the following reasons. If the surgical procedure results in the formation of a bleb, the more posterior the bleb is located, the fewer complications can be expected. Additionally, the bleb interferes less with eyelid motion and is generally more comfortable for the patient. Second, a longer scleral channel provides more surface contact between the channel and the tissue providing better anchoring. Third, the location of the channel may play a role in stimulating the formation of active drainage structures such as veins or lymph vessels. Finally, the location of the channel should be such so as to avoid other anatomical structures such as the ciliary body, iris, and cornea. Trauma to these structures could cause bleeding and other complications for the patient. Additionally, if the bleb is shallow in height and diffuse in surface area, it provides better drainage and less mechanical interference with the patient's eye. Tall, anteriorly located blebs are more susceptible to complications such as conjunctival erosions or blebitis which require further intervention by the surgeon.

[0089] The ab interno approach provides better placement than the ab externo approach because it provides the surgeon better visibility for entering the eye. If directing the needle from an ab externo approach, it is often very difficult for the surgeon to direct the needle to the trabecular meshwork (between Schwalbe's line and the scleral spur) without damaging the cornea, iris, or ciliary body.

[0090] In an alternative method of implantation, it is possible to direct the needle from the trabecular meshwork into the suprachoroidal space (instead of the subconjunctival space) and provide pressure relief by connecting these two spaces. The suprachoroidal space also called supracilliary space has been shown to be at a pressure of a few mmHg below the pressure in the anterior chamber.

[0091] Common to all of the embodiments of handheld implantation apparatus are a needle assembly including a hollow needle. In a preferred embodiment, hollow needle **22** may be any needle suitable for use in medical procedures. As such, needle **22** is made of a hard and rigid material such as stainless steel with a beveled sharpened distal tip. Needle **22** is bonded, welded, overmolded, or otherwise attached to the needle mount **23** and/or hub that is adapted for placement onto the distal end of a needle assembly. The needle **22** is disposable and intended for one time use.

[0092] Hollow needle **22** and indeed, the entire needle assembly may be sterilized by known sterilization techniques such as autoclaving, ethelyne oxide, plasma, electron beam, or gamma radiation sterilization. In a preferred embodiment, needle **22** is a 25 gauge thin walled needle that is commercially available from Terumo Medical Corp., Elkton, Md. 21921. The inside diameter of hollow needle **22** must be sufficient to accommodate optional guidewire **28**, channel **26** and plunger tube **32**, with an inner diameter of 200-400 μm being preferred. The usable length of needle **22** may be anywhere between 20-30 mm, although a length of approximately 22 mm is typical and preferred. Preferably, needle **22** may include markings or graduations **27** near the distal tip as shown in FIG. **19**. A graduated needle may be particularly useful to a surgeon inasmuch as much of the needle within the eye is not visible to the surgeon. Typically, the only visible portion of needle **22** is the portion within the anterior chamber. Accordingly, graduations **27** uniformly spaced along the needle shaft assist the surgeon in determining how far to advance the needle in order to place channel **26** in the desired location. In one embodiment, the graduations may be applied using laser marks, ink, paint or engraving and are typically spaced 0.1 to 1.0 mm apart.

[0093] While a straight hollow needle of the type typically used in medial procedures is generally preferred, in an alternative to the needle shown in the FIGS. **3-15** and described above, needle **22** may be rigid and have a distal portion that is arcute as shown in FIGS. **22-24**. As shown in FIGS. **22**(*a*)-(*d*) and FIGS. **23-24** arcuate needle may be preferably U-shaped or substantially U-shaped. With an "arcuate" needle, instead of pushing the needle into the patient's eye, the surgeon may orient the needle to "pull" the needle into the patient's eye. As shown in FIGS. **23-24**, the distal portion of the needle **22** terminating in the beveled tip, identified by reference number **96** is preferably disposed obliquely relative to the longitudinal axis of needle shaft **98** as seen in FIG. **24**.

[0094] Providing a piercing end **96** that is bent away from the plane of needle shaft **98** can facilitate manipulation and rotation of needle **22** during implantation of tube **26**. It may also provide the surgeon with greater flexibility in terms of selecting the corneal entry site and the ultimate final position of channel **26**. This is perhaps best seen with reference to FIGS. **20**, **21** and **22**(*a*)-(*d*).

[0095] For example, FIG. **20** depicts a transpupil implantation delivery generally described in U.S. Pat. No. 6,544,249 as shown in FIG. **1**. While the approach is satisfactory, it does require the needle to cross the visual axis. In the event of a surgical error that causes damage to the cornea or lens, corrective surgery may be required.

[0096] FIG. **21** depicts an alternative method of delivery referred to as an ipsilateral tangential delivery of channel **26**. In the ipsilateral tangential delivery method, the straight needle is directed tangentially to the pupil **100** border and the surgical limbus. This type of implant delivery allows the channel to be delivered to a greater circumference of the eye and has the advantage of avoiding the visual axis. Avoiding the visual axis reduces the risk of complications to the cornea **19** and lens through contact during surgery. Ipsilateral tangential delivery is a modification of the transpupil implant location generally described in U.S. Pat. No. 6,544,249, previously incorporated by reference.

[0097] Although the transpupil implant delivery and/or the ipsilateral tangential delivery, if performed correctly, are acceptable methods of delivering channel **26**, they do somewhat limit the location of the corneal entry site due to interference with the nose and eye orbit bones. In that regard, an

arcuate needle of the type described above and shown in FIGS. **22**(*a*)-(*d*) and FIGS. **23-24** may provide greater flexibility to the surgeon. With an arcuate needle, channel **26** may be placed anywhere around the 360.degree. circumference of the eye, including the temporal quadrants which would not be otherwise accessible for the reasons discussed above.

[0098] A further advantage of the arcuate needle and the delivery implant method associated therewith is that microfistula channel **26** can be delivered without crossing the lens i.e., visual axis, thereby reducing the risk of complications. An arcuate needle design may also allow the surgery to be done in patients with abnormal anatomy or who have previously undergone surgery.

[0099] In accordance with delivering a microfistula channel **26** using the U-shaped hollow needle **20** of FIGS. **23** and **24**, as noted above, instead of pushing the needle into the patient's eye, the surgeon orients the needle to "pull" needle **22** into the patient's eye. Thus, as shown in FIG. **22**(*a*), the pointed tip of hollow needle **22** is inserted at the desired corneal entry point and pulled in the direction of the arrow. Once the portion of needle **22** that contains the channel **26** is in the patient's eye, the surgeon rotates the needle and directs the needle **22** toward the target within the angle of the anterior chamber. After adjusting needle **22** to the proper position, the surgeon again pulls the needle **22** in the direction of the arrow of FIG. **22**(*b*) so that the needle is directed through the trabecular mesh work and sclera. The particular advancement and delivery steps described previously are then performed to place the channel **26** in the desired location and withdraw the guidewire plunger and needle from the eye. Of course, retraction and other movements of the needle may be automatically controlled in the manner described above and as shown in FIG. **9**.

[0100] In a further embodiment, a hollow needle **22** that is bent (but not necessarily in a U-shape as described above), may be provided. A needle of this type is shown in FIGS. **25-27**. As with the "arcuate" or U-shaped needles discussed above, a simple bend in the distal portion of needle **22** can likewise avoid interference from the patient's facial features. A bend that creates an angle α of between 900°-180° may be preferred. Providing a needle **22** with a bend is also ergonomically desirable in that it improves the position of the surgeon's hands during surgery. For example, by providing a bend in the distal portion of needle **22**, a surgeon may rest and stabilize his hands on the patient's forehead or other support while making the initial corneal entry and carrying out the later implantation steps. Providing a bend in the distal portion of needle **22** is not merely an alternative to the U-shaped needle of FIGS. **23** and **24**. In fact, both features i.e., a needle with an arcuate distal portion and further having a bend near the distal tip may be employed together in the needle **22**.

[0101] Whether the needle is U-shaped or bent at an angle .alpha. shown in FIG. **25**, the component parts of needle **22** must likewise be susceptible to bending. Accordingly, instead of a rigid plunger **32** and guidewire **28**, both the plunger and guidewire may be, in part, bendable or be made of a material that is bendable, yet provides adequate support and has adequate strength. In one example, the plunger **32** may be made of a tightly wound coil such as but limited to a spring or coil. Alternatively, at least a portion of guidewire **28** or plunger **32** may be made of a flexible plastic material including a polymeric material, examples of which include polyimide, PEEK, Pebax or Teflon. Other bendable, flexible materials may also be used. Similarly, guidewire **28** may be made of any of the above-described materials or a material such as nitinol which has shape memory characteristics. The entire plunger or guidewire **28** may be made of the flexible materials described above or, as shown in FIG. **27** only a portion of the guidewire **28** or plunger tube **32** may be made of the selected material or be otherwise bendable.

[0102] Typically, however, guidewire **28** is preferably a narrow gauge wire made of a suitable rigid material. A preferred material is tungsten or stainless steel, although other non-metallic materials may also be used. In a preferred embodiment, guidewire **28** is solid with an outside diameter of approximately 50-200 (ideally 125) microns. Where guidewire **28** is made of tungsten, it may be coated with a Teflon, polymeric, or other plastic material to reduce friction and assist in movement of channel **26** along guidewire **28** during implantation.

[0103] Channels **26** useful in the present invention, are preferably made of a biocompatible and preferably bioabsorbable material. The materials preferably have a selected rigidity, a selected stiffness and a selected ability to swell (during manufacture and/or after implantation) in order to provide for secure implantation of the channel in the desired section of the eye. Selecting a material that is capable of a controlled swelling is also desirable. By controlled swelling, it is meant that the swellable material is such that the outer diameter of the channel expands (increases) without decreasing the inner diameter. The inner diameter may increase or remain substantially the same. The materials and methods for making channels described below provide such controlled swelling. By sufficient biocompatibility, it is meant that the material selected should be one that avoids moderate to severe inflammatory or immune reactions or scarring in the eye. The bioabsorbability is such that the channel is capable of being absorbed by the body after it has been implanted for a period of anywhere between 30 days and 2 years and, more preferably, several months such as 4-7 months.

[0104] In one embodiment, the material selected for the channels is preferably a gelatin or other similar material. In a preferred embodiment, the gelatin used for making the channel is known as gelatin Type B from bovine skin. A preferred gelatin is PB Leiner gelatin from bovine skin, Type B, 225 Bloom, USP. Another material that may be used in the making of the channels is a gelatin Type A from porcine skin also available from Sigma Chemical. Such gelatin is available is available from Sigma Chemical Company of St. Louis, Mo. under Code G-9382. Still other suitable gelatins include bovine bone gelatin, porcine bone gelatin and human-derived gelatins. In addition to gelatins, microfistula channel may be made of hydroxypropyl methycellulose (HPMC), collagen, polylactic acid, polylglycolic acid, hyaluronic acid and glycosaminoglycans.

[0105] In accordance with the present invention, gelatin channels are preferably cross-linked. Cross-linking increases the inter- and intramolecular binding of the gelatin substrate. Any means for cross-linking the gelatin may be used. In a preferred embodiment, the formed gelatin channels are treated with a solution of a cross-linking agent such as, but not limited to, glutaraldehyde. Other suitable compounds for cross-linking include 1-ethyl-3-[3-(dimethyamino)propyl] carbodiimide (EDC). Cross-linking by radiation, such as gamma or electron beam (e-beam) may be alternatively employed.

[0106] In one embodiment, the gelatin channels are contacted with a solution of approximately 25% glutaraldehyde

for a selected period of time. One suitable form of glutaraldehyde is a grade 1G5882 glutaraldehyde available from Sigma Aldridge Company of Germany, although other glutaraldehyde solutions may also be used. The pH of the glutaraldehyde solution should preferably be in the range of 7 to 7.8 and, more preferably, 7.35-7.44 and typically approximately 7.4.+−.0.01. If necessary, the pH may be adjusted by adding a suitable amount of a base such as sodium hydroxide as needed.

[0107] Channels used in the present invention are generally cylindrically shaped having an outside cylindrical wall and, in one embodiment, a hollow interior. The channels preferably have an inside diameter of approximately 50-250 microns and, more preferably, an inside diameter and us, a flow path diameter of approximately 150 to 230 microns. The outside diameter of the channels may be approximately 190-300 with a minimum wall thickness of 30-70 microns for stiffness.

[0108] As shown in FIG. **28**, one end of tube **26** may be slightly tapered to limit or prevent migration of tube **26** after it has been implanted. Other means for limiting migration are also shown in FIGS. **29-33**. For example, channel **26** may include expandable tab **150** along outer surface **152** of tube **26**. As shown in FIG. **29**, prior to deployment and introduction of tube into the patient's eye, tabs **150** are rolled or otherwise pressed against surface **152**. Tabs **150** may also be features that are cut out of the outer surface of channel **26** (i.e., not separately applied). Upon contact with an aqueous environment, tabs **150** are deployed. Specifically, contact with an aqueous environment causes tabs **150** to expand as shown in FIG. **30** and, thereby, create an obstruction which limits or prevents migration of tube **26**. Tube **26** may include a plurality of tabs, typically but not limited to 1-4, and may be located nearer the subconjuctival side, the anterior chamber or both, as shown in FIG. **33**. Other means for limiting or preventing migration include barbs **158** placed along the length of tube **26** as shown in FIGS. **31-32** and also disclosed in U.S. Pat. Nos. 6,544,249 and 6,007,511, previously incorporated by reference.

[0109] The length of the channel may be any length sufficient to provide a passageway or canal between the anterior chamber and the subconjunctival space. Typically, the length of the channel is between approximately 2 to 8 millimeters with a total length of approximately 6 millimeters, in most cases being preferred. The inner diameter and/or length of tube **26** can be varied in order to regulate the flow rate through channel **26**. A preferred flow rate is approximately 1-3 microliters per minute, with a flow rate of approximately 2 microliters being more preferred.

[0110] In one embodiment, channels **26** may be made by dipping a core or substrate such as a wire of a suitable diameter in a solution of gelatin. The gelatin solution is typically prepared by dissolving a gelatin powder in de-ionized water or sterile water for injection and placing the dissolved gelatin in a water bath at a temperature of approximately 55° C. with thorough mixing to ensure complete dissolution of the gelatin. In one embodiment, the ratio of solid gelatin to water is approximately 10% to 50% gelatin by weight to 50% to 90% by weight of water. In an embodiment, the gelatin solution includes approximately 40% by weight, gelatin dissolved in water. The resulting gelatin solution preferably is devoid of any air bubbles and has a viscosity that is between approximately 200-500 cp and more preferably between approximately 260 and 410 cp (centipoise).

[0111] Once the gelatin solution has been prepared, in accordance with the method described above, supporting structures such as wires having a selected diameter are dipped into the solution to form the gelatin channels. Stainless steel wires coated with a biocompatible, lubricious material such as polytetrafluoroethylene (Teflon) are preferred.

[0112] Typically, the wires are gently lowered into a container of the gelatin solution and then slowly withdrawn. The rate of movement is selected to control the thickness of the coat. In addition, it is preferred that a the tube be removed at a constant rate in order to provide the desired coating. To ensure that the gelatin is spread evenly over the surface of the wire, in one embodiment, the wires may be rotated in a stream of cool air which helps to set the gelatin solution and affix film onto the wire. Dipping and withdrawing the wire supports may be repeated several times to further ensure even coating of the gelatin. Once the wires have been sufficiently coated with gelatin, the resulting gelatin films on the wire may be dried at room temperature for at least 1 hour, and more preferably, approximately 10 to 24 hours. Apparatus for forming gelatin tubes are described below.

[0113] Once dried, the formed microfistula gelatin channels are treated with a cross-linking agent. In one embodiment, the formed microfistula gelatin films may be cross-linked by dipping the wire (with film thereon) into the 25% glutaraldehyde solution, at pH of approximately 7.0-7.8 and more preferably approximately 7.35-7.44 at room temperature for at least 4 hours and preferably between approximately 10 to 36 hours, depending on the degree of cross-linking desired. In one embodiment, formed channel is contacted with a cross-linking agent such as gluteraldehyde for at least approximately 16 hours. Cross-linking can also be accelerated when it is performed a high temperatures. It is believed that the degree of cross-linking is proportional to the bioabsorption time of the channel once implanted. In general, the more cross-linking, the longer the survival of the channel in the body.

[0114] The residual glutaraldehyde or other cross-linking agent is removed from the formed channels by soaking the tubes in a volume of sterile water for injection. The water may optionally be replaced at regular intervals, circulated or re-circulated to accelerate diffusion of the unbound glutaraldehyde from the tube. The tubes are washed for a period of a few hours to a period of a few months with the ideal time being 3-14 days. The now cross-linked gelatin tubes may then be dried (cured) at ambient temperature for a selected period of time. It has been observed that a drying period of approximately 48-96 hours and more typically 3 days (i.e., 72 hours) may be preferred for the formation of the cross-linked gelatin tubes.

[0115] Where a cross-linking agent is used, it may be desirable to include a quenching agent in the method of making channel **26**. Quenching agents remove unbound molecules of the cross-linking agent from the formed channel **26**. In certain cases, removing the cross-linking agent may reduce the potential toxicity to a patient if too much of the cross-linking agent is released from channel **26**. Formed channel **26** is preferably contacted with the quenching agent after the cross-linking treatment and, preferably, may be included with the washing/rinsing solution. Examples of quenching agents include glycine or sodium borohydride.

[0116] The formed gelatin tubes may be further treated with biologics, pharmaceuticals or other chemicals selected to regulate the body's response to the implantation of channel

26 and the subsequent healing process. Examples of suitable agents include anti-mitolic pharmaceuticals such as Mitomycin-C or 5-Fluorouracil, anti-VEGF (such as Lucintes, Macugen, Avastin, VEGF or steroids).

[0117] After the requisite drying period, the formed and cross-linked gelatin tubes are removed from the underlying supports or wires. In one embodiment, wire tubes may be cut at two ends and the formed gelatin tube slowly removed from the wire support. In another embodiment, wires with gelatin film thereon, may be pushed off using a plunger or tube to remove the formed gelatin channel.

[0118] FIGS. **16** and **17** show two alternative methods and apparatus for forming gelatin channels. In FIG. **16**, apparatus **140** includes a suspended wire **142** that may be introduced into a vacuum chamber **144** at a temperature of 20° C. The gelatin solution **146** maintained at 55° C. may be applied to the wire in vacuum chamber **144** by spraying via air jet **148**. Wire **142** is rotated by rotating apparatus **150** to ensure that the sprayed gelatin is applied evenly to the surface of wire **142**.

[0119] In FIG. **17**, a further alternative embodiment of forming gelatin tubes is shown. In accordance with the embodiment of FIG. **17**, a wire **142** attached to a rotating apparatus **150** is dipped into the gelatin solution **163** at 55° C. as generally described above. Wire **142** is dipped into and removed, from the gelatin solution repeatedly and sprayed with air to ensure an even coat of the gelatin film onto the wire. In either embodiment of FIGS. **16** and **17**, the gelatin tubes formed thereby may be further subjected to a cross-linking step desired above.

[0120] The gelatin tube may also be formed by preparing the mixture as described above and extruding the gelatin into a tubular shape using standard plastics processing techniques. Preparing channel **26** by extrusion allows for providing channels of different cross sections. For example, as shown in FIG. **34**, channels **26** having two or more passageways **260** may be provided, allowing for flow regulation. In one embodiment, passageways **260** may be selectively opened or obstructed, as shown in the shading on FIG. **34**(*d*) to selectively control flow therethrough. One of the passageways **260** may be adapted to receive guidewire **28** or, in the alternative, channel **26** of FIG. **34** may be used (and implanted) without a guidewire, as previously described. Channel **26** shown in FIG. **34** may also provide greater structural integrity after implantation.

[0121] FIG. **18** shows an automated apparatus **160** for preparing a plurality of microfistula gelatin tubes. Shown in FIG. **18** is an apparatus **160** that includes a temperature controlled bath **162** of the gelatin solution **163**. The apparatus includes a frame **164** that carries a vertically movable dipping arm **166**. The dipping arm is coupled to a gear box **168** which is actuated by a rotary motor. The dipping arm includes a plurality of clamps (not shown) for holding several mandrel wires **170** for dipping into the gelatin solution. As further shown in FIG. **18**, mandrel wires **170** may further include weights **172** suspended at their distal ends to ensure that the wire remains substantially straight (without kinking or curving) and to dampen oscillations or vibrations when being dipped in the gelatin solution **163**. The operation of apparatus **160** may be controlled by a controller such as a computer with commands for dipping and withdrawal of the wires from the gelatin solution. A stirrer **176** may be provided to ensure the consistency of the gelatin solution. After the gelatin tubes have been formed, the tubes are dried and cross-linked as described above.

[0122] Channels **26** made in accordance with the methods described above, allow for continuous and controlled drainage of aqueous humor from the anterior chamber of the eye. The preferred drainage flow rate is approximately 2 microliters per minute, although by varying the inner diameter and length of channel **26**, the flow rate may be adjusted as needed. One or more channels **26** may be implanted into the eye of the patient to further control the drainage.

[0123] In addition to providing a safe and efficient way to relieve intraocular pressure in the eye, it has been observed that implanted channels disclosed herein can also contribute to regulating the flow rate (due to resistance of the lymphatic outflow tract) and stimulate growth of functional drainage structures between the eye and the lymphatic and/or venous systems. These drainage structures evacuate fluid from the subconjunctiva which also result in a low diffuse bleb, a small bleb reservoir or no bleb whatsoever.

[0124] The formation of drainage pathways formed by and to the lymphatic system and/or veins may have applications beyond the treatment of glaucoma. Thus, the methods of channel implantation may be useful in the treatment of other tissues and organs where drainage may be desired or required.

[0125] In addition, it has been observed that as the microfistula channel absorbs, a "natural" microfistula channel or pathway lined with cells is formed. This "natural" channel is stable. The implanted channel stays in place (thereby keeping the opposing sides of the formed channel separated) long enough to allow for a confluent covering of cells to form. Once these cells form, they are stable, thus eliminating the need for a foreign body to be placed in the formed space.

[0126] While the methods, apparatus and systems of this disclosure have been described with reference to certain embodiments, it will be apparent to those skilled in the art that numerous modifications and variations can be made within the scope and spirit of the inventions as recited in the appended claims.

What is claimed is:

1. An implantable channel comprising;

a body configured to be implanted in a patient's eye, the body comprising:

an inlet end, configured to reside, after implantation in the patient's eye, in an anterior chamber of the eye;

an outlet end, configured to reside, after implantation in the patient's eye, in a subconjunctival space of the eye; and

an interior flow path extending between the inlet end and the outlet end of the body;

wherein the body comprises a cross-linked gelatin and has an expandable outer diameter; and

wherein the interior flow path comprises an interior diameter of from approximately 50 microns to approximately 250 microns.

2. The channel of claim **1**, wherein the interior diameter does not decrease when said outer diameter is dynamically expanded.

3. The channel of claim **2**, wherein said outer diameter is from approximately 200 microns to approximately 360 microns when expanded.

4. The channel of claim **1**, wherein said channel, when implanted in the eye, stimulates development of drainage structures in the eye.

5. The channel of claim **4**, wherein said drainage structures comprise lymphatic vessels.

6. The channel of claim **4**, wherein said drainage structures comprise veins.

7. The channel of claim **1**, wherein said body comprises a total length, from the inlet end to the outlet end, of from approximately 2 millimeters to approximately 8 millimeters.

8. The channel of claim **7**, wherein the total length is approximately 6 millimeters.

9. The channel of claim **1**, wherein said interior flow path is configured to provide a flow rate through the body of from approximately 1 microliter per minute to approximately 3 microliters per minute.

10. The channel of claim **1**, wherein said interior flow path is configured to provide a flow rate through the body of approximately 2 microliters per minute.

11. The channel of claim **1**, wherein the body comprises a wall thickness, from an interior surface of the interior flow path to an outer surface of the body, of from 30 microns to 70 microns.

12. The channel of claim **1**, wherein said body is tapered.

13. The channel of claim **1**, wherein said body comprises an outer surface having at least one retainer for securing the body within eye tissue.

14. The channel of claim **13**, wherein said retainer comprises a barb.

15. The channel of claim **13**, wherein said retainer comprises a deployable tab.

16. The channel of claim **15**, wherein said deployable tab expands in a direction away from said outer surface when said channel is exposed to an aqueous environment.

17. The channel of claim **1**, wherein the cross-linked gelatin is bioabsorbable.

18. The channel of claim **17**, wherein the cross-linked gelatin is configured to be resorbed by the eye within 30 days and 2 years after implantation within the eye.

19. The channel of claim **17**, wherein the cross-linked gelatin is configured to be resorbed by the eye within 4 to 7 months after implantation within the eye.

20. An implantable channel, for transmitting fluid from an organ of a patient, the channel comprising;

a body configured to be implanted into a patient, the body comprising:

an inlet end, configured to receive fluid, at a first end of the body;

an outlet end at a second end of the body; and

an interior flow path extending between, and in communication with, the inlet end and the outlet end of the body;

wherein the body comprises an expandable outer diameter, and the interior flow path has an interior diameter that does not decrease as the outer diameter dynamically expands; and

wherein the interior diameter is from approximately 50 microns to approximately 250 microns.

21. The channel of claim **20**, wherein said outer diameter, when expanded, is from approximately 200 microns to approximately 360 microns.

22. The channel of claim **20**, wherein said body comprises a total length, from the inlet end to the outlet end, of from approximately 2 millimeters to approximately 8 millimeters.

23. The channel of claim **22**, wherein the total length is approximately 6 millimeters.

24. The channel of claim **20**, wherein said interior flow path is configured to provide a flow rate through the body of from approximately 1 microliter per minute to approximately 3 microliters per minute.

25. The channel of claim **20**, wherein the body comprises a wall thickness, from an interior surface of the interior flow path to an outer surface of the body, of from 30 microns to 70 microns.

26. The channel of claim **20**, wherein said body comprises a deployable tab that expands in a direction away from said outer surface when said channel is exposed to an aqueous environment.

27. The channel of claim **20**, wherein the cross-linked gelatin is bioabsorbable.

28. An implantable channel, for draining fluid from an anterior chamber of an eye, the channel comprising;

a body configured to be implanted in a patient's eye, the body comprising:

an inlet end, configured to reside, after implantation in the patient's eye, in an anterior chamber of the eye;

an outlet end, configured to reside, after implantation in the patient's eye, in a natural space of the eye; and

an interior flow path extending between the inlet end and the outlet end of the body;

wherein the body comprises an expandable outer diameter; and

wherein the interior flow path comprises an interior diameter of from approximately 50 microns to approximately 250 microns, and wherein the interior diameter does not decrease when said outer diameter is dynamically expanded.

29. The channel of claim **28**, wherein said outer diameter is from approximately 200 microns to approximately 360 microns when expanded.

30. The channel of claim **28**, wherein said body comprises a total length, from the inlet end to the outlet end, of from approximately 2 millimeters to approximately 8 millimeters.

31. The channel of claim **30**, wherein the total length is approximately 6 millimeters.

32. The channel of claim **28**, wherein said interior flow path is configured to provide a flow rate through the body of from approximately 1 microliter per minute to approximately 3 microliters per minute.

33. The channel of claim **28**, wherein said interior flow path is configured to provide a flow rate through the body of approximately 2 microliters per minute.

34. The channel of claim **28**, wherein the body comprises a wall thickness, from an interior surface of the interior flow path to an outer surface of the body, of from 30 microns to 70 microns.

35. The channel of claim **28**, wherein said body comprises a deployable tab that expands in a direction away from said outer surface when said channel is exposed to an aqueous environment.

36. The channel of claim **28**, wherein the body further comprises a cross-linked gelatin.

37. The channel of claim **28**, wherein the cross-linked gelatin is bioabsorbable.

38. The channel of claim **37**, wherein the cross-linked gelatin is configured to be resorbed by the eye within 30 days and 2 years after implantation within the eye.

39. The channel of claim **37**, wherein the cross-linked gelatin is configured to be resorbed by the eye within 4 to 7 months after implantation within the eye.

* * * * *