PCT WORLD INTELLECTUAL PROPERTY ORGANIZATION
International Bureau

INTERNATIONAL APPLICATION PUBLISHED UNDER THE PATENT COOPERATION TREATY (PCT)

(51) International Patent Classification 5 :		(11) International Publication Number:
A01K 63/04, C02F 3/30	A1	WO 94/10833
		(43) International Publication Date: 26 May 1994 (26.05.94)

(21) International Application Number: PCT/EP93/03226

(22) International Filing Date: 18 November 1993 (18.11.93)

(30) Priority data:
103809 19 November 1992 (19.11.92) IL

(71) Applicant *(for all designated States except US)*: YISSUM RESEARCH DEVELOPMENT COMPANY OF THE HEBREW UNIVERSITY OF JERUSALEM [IL/IL]; 46 Jabotinsky Street, 91 042 Jerusalem (IL).

(71)(72) Applicant and Inventor: VAN RIJN, Jaap [NL/IL]; 33/17 Hanassi Harishon Street, 76 303 Rehovot (IL).

(74) Agent: WEISERT, Annekäte; Kraus, Weisert & Partner, Thomas-Wimmer-Ring 15, D-80539 Munich (DE).

(81) Designated States: AU, BR, CA, JP, US, European patent (AT, BE, CH, DE, DK, ES, FR, GB, GR, IE, IT, LU, MC, NL, PT, SE).

Published
With international search report.

(54) Title: WATER QUALITY CONTROL IN FISH PONDS

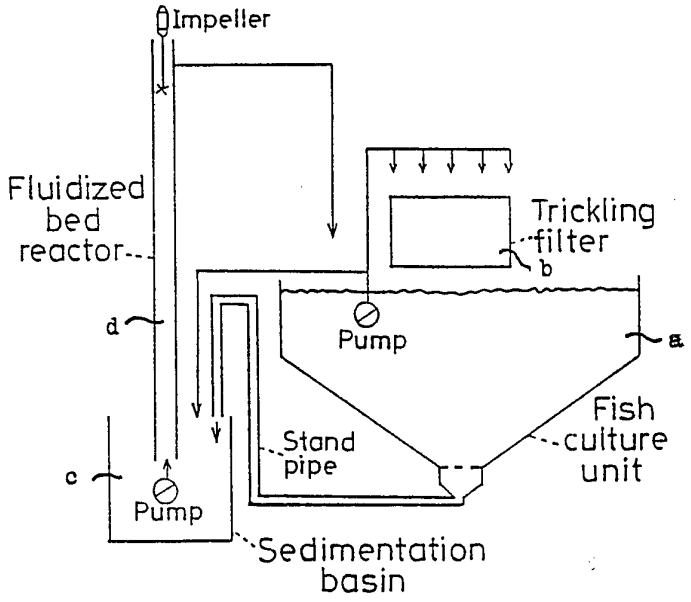

(57) Abstract

There is provided a system for water quality control and improvement in intensive fish culture systems. The aim of the water treatment is to reduce the content of inorganic nitrogen and of organic matter. The system comprises a fish pond, a settling pond, a fluidized bed reactor and a trickling filter. The system according to the invention can be an essentially closed one, except for periodic water replenishment.

FOR THE PURPOSES OF INFORMATION ONLY

Codes used to identify States party to the PCT on the front pages of pamphlets publishing international applications under the PCT.

AT	Austria	**GB**	United Kingdom	**MR**	Mauritania
AU	Australia	**GE**	Georgia	**MW**	Malawi
BB	Barbados	**GN**	Guinea	**NE**	Niger
BE	Belgium	**GR**	Greece	**NL**	Netherlands
BF	Burkina Faso	**HU**	Hungary	**NO**	Norway
BG	Bulgaria	**IE**	Ireland	**NZ**	New Zealand
BJ	Benin	**IT**	Italy	**PL**	Poland
BR	Brazil	**JP**	Japan	**PT**	Portugal
BY	Belarus	**KE**	Kenya	**RO**	Romania
CA	Canada	**KG**	Kyrgystan	**RU**	Russian Federation
CF	Central African Republic	**KP**	Democratic People's Republic of Korea	**SD**	Sudan
CG	Congo			**SE**	Sweden
CH	Switzerland	**KR**	Republic of Korea	**SI**	Slovenia
CI	Côte d'Ivoire	**KZ**	Kazakhstan	**SK**	Slovakia
CM	Cameroon	**LI**	Liechtenstein	**SN**	Senegal
CN	China	**LK**	Sri Lanka	**TD**	Chad
CS	Czechoslovakia	**LU**	Luxembourg	**TG**	Togo
CZ	Czech Republic	**LV**	Latvia	**TJ**	Tajikistan
DE	Germany	**MC**	Monaco	**TT**	Trinidad and Tobago
DK	Denmark	**MD**	Republic of Moldova	**UA**	Ukraine
ES	Spain	**MG**	Madagascar	**US**	United States of America
FI	Finland	**ML**	Mali	**UZ**	Uzbekistan
FR	France	**MN**	Mongolia	**VN**	Viet Nam
GA	Gabon				

DESCRIPTION

WATER QUALITY CONTROL IN FISH PONDS

Field of Invention

The system of the invention is suited for water quality control in intensive fish culture systems. The treatment system is capable of reducing inorganic nitrogen and organic matter in closed aquaculture facilities (without water exchange) to levels not harmful to fish. The treatment system is compact and is especially suitable for fish culture in heated, indoor aquaculture facilities.

Background

In recent years, aquaculture (cultivation of fish or other aquatic organisms) is characterized by a tendency towards growing more fish per unit area. Special ponds have been constructed (Zohar and Rappaport, Zohar, G., Rappaport, U. and S. Sarig, 1985. Intensive culture of tilapia in concrete tanks. Bamidgeh 37: 103-112, 1985; van Rijn et al., van Rijn, J.,Stutz, S, Diab, S. and M. Shilo. 1986. Chemical, physical and biological parameters of superintensive concrete fish ponds. Bamidgeh 38: 35-43. van Rijn, J. and G. Rivera. 1990. Aerobic and anaerobic biofiltration in an aquaculture unit - Nitrite accumulation as a result of nitrification and denitrification. Aquacult. Engineer. 9: 217-234. 1986) that enable stocking densities of up to 50 times the stocking densities generally maintained in conventional fishponds. As opposed to conventional fishponds, waterquality deterioration proceeds rapidly in these intensive fishponds and without man-made interference, fish mortality would be imminent.

Theoretically, two options exist as to maintaining an adequate waterquality in these intensive fish culture ponds. Either the ponds are continuously flushed with clean (unpolluted) water or the pondwater is continuously treated in order to reduce the level of pollutants. Unlimited amounts of clean water to flush the ponds is a luxury which is restricted to a few geographical areas only. Therefore, treatment of the pondwater is the option of choice in most places.

The accumulation of inorganic nitrogen in intensively cultured fishponds is one of the major limiting factors preventing a further intensification. Inorganic nitrogen (especially ammonia and nitrite) is toxic to fish and it accumulates in the pondwater through excretion of ammonia by the fish and by breakdown of organic solids. Most of the treatment systems used in aquaculture facilities are designed to facilitate the growth of nitrifying bacteria which oxidize ammonia via nitrite to nitrate. A drawback of the ammonia removal by means of nitrification is the subsequent increase in nitrate in the culture system. Nitrate concentrations of up to 800 mg liter^{-1} NO_3-N have been recorded in semi-closed aquaculture facilities where nitrification was employed as water purification step. High nitrate concentrations ought to be prevented for several reasons. Firstly, nitrate at high concentrations has a toxic effect on several fish species. Secondly, the discharge of nitrate-rich

effluent water is prohibited in many countries due to environmental and public health considerations. The maximum levels of nitrate allowed in the effluent water differ from country to country and are as low as 11.6 mg liter^{-1} NO_3-N in Europe according to the European Community directive. Thirdly, under certain conditions nitrate in the fish culture system is converted to nitrite, a compound extremely toxic to fish.

A treatment system was developed by our group (van Rijn and Rivera, 1990) which was aimed at reducing inorganic nitrogen from the pond water by means of induction of two microbial process: nitrification (oxidation of ammonia to nitrate) and denitrification (reduction of nitrate to N_2 gas). Nitrification was induced in a socalled trickling filter containing material previously not used for this purpose. Denitrification was induced in fluidized bed reactors. As denitrification is a heterotrophic process (denitrifying bacteria require organic matter for growth and metabolism), organic matter derived from the fishpond was led through the fluidized bed reactor. This treatment system was not entirely satisfactory as denitrifying activity in the fluidized bed reactors was highly unpredictable and large daily fluctuations in nitrate removal were observed. Furthermore, nitrite accumulation by the fluidized bed reactor was found under all running conditions tested (van Rijn and Rivera, 1990). According to the invention the

treatment system has been modified by incorporating a settling stage in which organic matter derived from the fishpond is partially degraded. The supernatent of the settling pond, rich in organic decomposition products, is then used to "fuel" denitrifying activity in the fluidized bed reactor.

This modified treatment system has been demonstrated to be effective both at lab-scale and under experimental field conditions. In one of the stations for fishculture research we managed to maintain fish at a density of 20 kg m^{-3} in a 50m^3 pond over a three months period (July - September). The system was operated in a virtually, closed fashion (only 3 m^3 of water was daily added to the pond in order to compensate for evaporation losses). Both inorganic nitrogen and organic matter were reduced to levels securing optimal fish growth over the experimental period.

The invention is illustrated by way of example only with reference to the enclosed schematical Figure, which is a scheme of a fish pond and water treatment system of the invention.

As shown in this Figure the fish pond "a" is connected with trickling filter "b", and with settling tank "c", from which water is pumped to settling pond "c", and from this to the lower part of fluidized bed column "d", and after passage through "d" it is returned to pond "a".

The trickling filter "b" is provided with a large internal surface area, and means are provided in introduce water at its top, preferably by spraying. This water trickles down the filter via a plurality of channels. Water is pumped, preferably from the center of pond "a" to the settling tank (pond) "c", and supernatant water from this pond is pumped into the bottom of the fluidized bed column "d", and the water having passed this column is fed back to the fishpond "a". The settling tank serves to concentrate the organic material from the fish pond, and decomposition of this material takes place in this settling tank, resulting amongst others in the formation of acetate. The supernatent from this tank is fed to the fluidized bed reactor (column), where the acetate is used as carbon source by bacteria which reduce nitrate to gaseous nitrogen. While retention time in the settling tank is of the order of hours, it is of the order of minutes in the fluidized bed reactor. Generally a settling tank of from about 3 to 10 m^3 is adequate for use with a fish pond of about 50 m^3, by the way of example, which is illustrative only, a satisfactory experimental system is described in the following.

The invention is illustrated with reference to the enclosed schematical Figures, in which:

Fig. 1 is a scheme of a fish pond and treatment system;

Fig. 2 illustrates ammonia (A), nitrite (B) and nitrate (C) concentrations in a system of the invention;

Fig. 3 illustrates the same in a control pond.

The following parameters are intended to give a rough indication of the order of magnitude of the operation of a system of the invention:

Generally the volume of the settling tank is of the order of from about 3 per cent to about '10 per cent of that of the volume of the fish pond.

Generally there is passed water from the pond through the trickling filter at a rate of the order of from about 20 to about 40 per cent of the volume of the pond per hour. For a pond of about 50 m^3 , a filter, a trickling filter of 2m x 2m x 1.5m as any corresponding configuration, with about 150 to about 300 m internal surface area gave good results. For the same pond, a fluidized bed column of from about 3 to 6 meter height and 15 to about 25 cm internal diameter can be used, with a retention time of from about 5 to about 15 mintues.

These are data intended only to indicate an order of magnitude, and it is clear that these will vary from pond to pond according to its specific conditions, concentration of ammonia etc.

A scheme of the fishpond and treatment system is shown in Figure 1. The trickling filter (b) with dimensions of 2.0x2.0x1.5m was constructed of PVC material (Jerushalmi Ltd, Nes Ziona, Israel) in such a configuration that water sprayed on top of the filter material trickles down the filter through a large number of smooth channels. The surface area provided by this PVC material is 200 m^2 m^{-3}. Water is pumped from the surface of the fishpond (a) onto the trickling filter at a flow rate of 15 m^3 h^{-1}. From the center of the fish pond water, rich in particulate organic matter (see van Rijn and Rivera, 1990), water is pumped to a settling pond (c) with a total volume of 3 m^3. Supernatent water from the settling tank is pumped into the bottom of a fluidized bed column (d) at a flow rate of 0.6-1.2 m^3 h^{-1}. The fluidized bed column has a height of 4.8 m and an inner diameter of 19.3 cm (net volume: 131.5 liters). Retention time of the column varied, therefore, from 6.5-13 min. The fluidized bed column was filled with sand (diameter: 0.3-0.9 mm) up to 40-50 cm of column height. Water leaving the column through a side-arm at the top is led back into the fishpond. The water flow rate from the fishpond (50 m^3) to the settling pond is identical to the flow rate from the settling tank to the fluidized bed column. Therefore, the retention time of the settling tank varied from 2.5 to 5 hrs.

Performance

The treatment system was tested during the summer of 1992 at an experimental station in Israel. Common carp (Cyprinus carpio) were cultured in the fishpond (50 m^3) at a density of 20 $\pm$ 4 kg m^{-3} over a period of three months. During this period the treatment system was operated with a flow rate of 15 m^3 h^{-1} through the trickling filter and a flow rate of 0.6 m^3 h^{-1} through the settling pond and fluidized bed reactor. Clean water was supplied to the fish pond at a rate of 3 m^3 day^{-1} in order to compensate for evaporation losses.

Inorganic nitrogen removal. Concentrations of inorganic nitrogen in the treatment pond over this period were relatively low, well beneath the limits considered toxic to fish (Fig. 2). The elevated ammonia levels around day 40 were due to a repair of the trickling filter. It should be noted that ammonia concentrations above 1-2 mg liter^{-1} NH_4-N and nitrite concentrations above 0.5-1.0 mg liter^{-1} NO_2-N are considered to be harmful for fish growth. A similar operated control pond, lacking a treatment system, was operated for a period of 15 days. During this period concentrations of ammonia and nitrite reached toxic levels (Fig. 3), causing fish mortality from day 10 onwards. From additional control runs (not shown) with different daily

quantities of clean water supply, it could be concluded that at least 250 m^3 of clean water was needed daily (five pond volume changes) in order to reach the low concentrations of inorganic nitrogen found in the treatment pond.

Organic matter removal. During the experimental period the net removal of organic matter by breakdown of organic matter in the sedimentation pond and in the fluidized bed reactor was estimated to be 20-30% of total amount of organic matter entering the fishpond daily. It was found, furthermore, that short-chain fatty acids, in particular acetate, which were released through decomposition processes in the sedimentation pond, were used as an energy and carbon source for the denitrifying bacteria in the fluidized bed column. It should be noted that the primary goal was aimed at designing a treatment system capable of reducing the levels of inorganic nitrogen in the fishpond. From preliminary studies it can be concluded that higher removal rates of organic matter can be obtained upon changing the retention time in the different components of the treatment system.

CLAIMS:

1. A system for water quality control in intensive fish culture systems, for reducing inorganic nitrogen and organic matter concentrations, comprising in combination a fish pond, means for passing water to be treated from said pond to a settling pond, and after a suitable retention time in said pond through a fluidized bed reactor (anaerobic stage) and after bacterial reduction of nitrates to nitrogen in said fluidized bed reactor is fed back to the pond, while water from the pond is passed through a trickling filter (aerobic stage) where ammonia is oxidized by nitrifying bacteria to nitrate, and returned to the pond.

2. A system according to claim 1, where water is added periodically to the pond to compensate for evaporated water.

3. A system according to claim 1 or 2, where the volume of the settling tank is from about 3 per cent to about 10 per cent the volume of the fish pond, and where the retention time is of the order of a few hours.

4. A system according to any of claims 1 to 3, where the trickling filter is provided with a large internal suface area which supports nitrifying bacteria, and through which water is passed from about 20 to 40 per cent of the volume of the pond per hour.

5. A system according to claim 4, where for a pond of 50 m^3 the trickling filter has an internal surface of from about 200 m^2 to about 500 m^2 .

6. A system according to any of claims 1 to 5, where means are provided for introducing the water from the settling tank at a rate of from about 0.5 to about 2 m^3 per hour for a 50 m^3 fish pond, with a retention time of the order of from about 5 to 15 minutes in said fluidized bed.

7. A system according to any of claims 1 to 6, where the lower part of the fluidized bed is filled with an inert particulate material.

8. A system according to claims 1 to 7, where the supernatant from the settling tank, rich in organic material, and especially in short-chain fatty acids is fed to the fluidized bed reactor, where it serves as carbon source for the denitrifying bacteria.

9. An essentially closed system, except for periodic water addition, for high density fish culture, comprising in combination a fish pond, an anaerobic fluidized bed reactor, a settling tank located between the pond and such reactor, and a aerobic trickling filter, also supplied with water from the fish pond, substantially as herein described and with reference to the Figures.

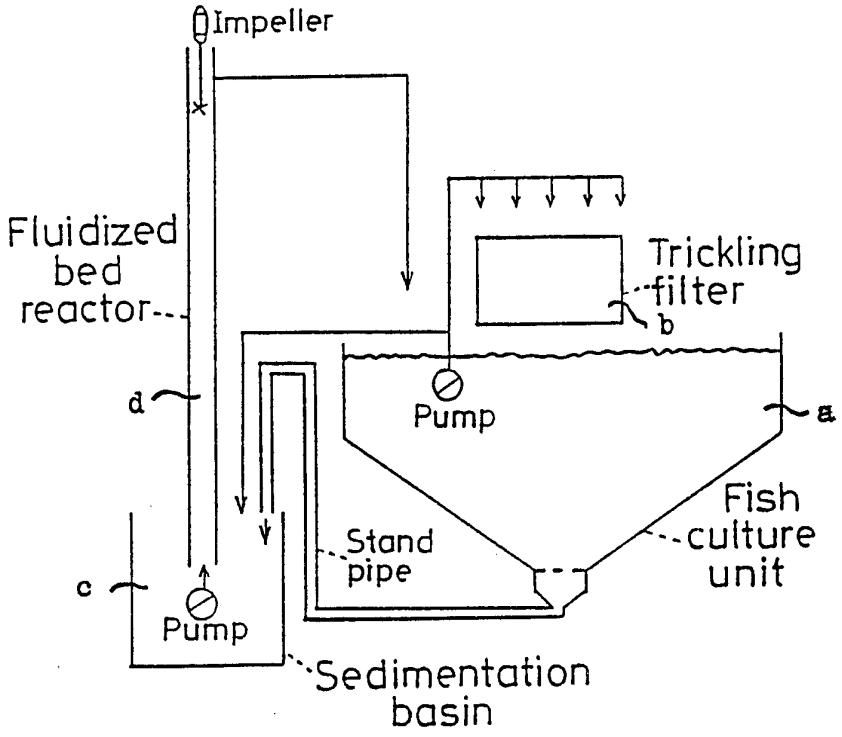
Impeller
Fluidized bed reactor
Trickling filter
b
d
Pump
a
Fish culture unit
Stand pipe
c
Pump
Sedimentation basin

FIG. 1

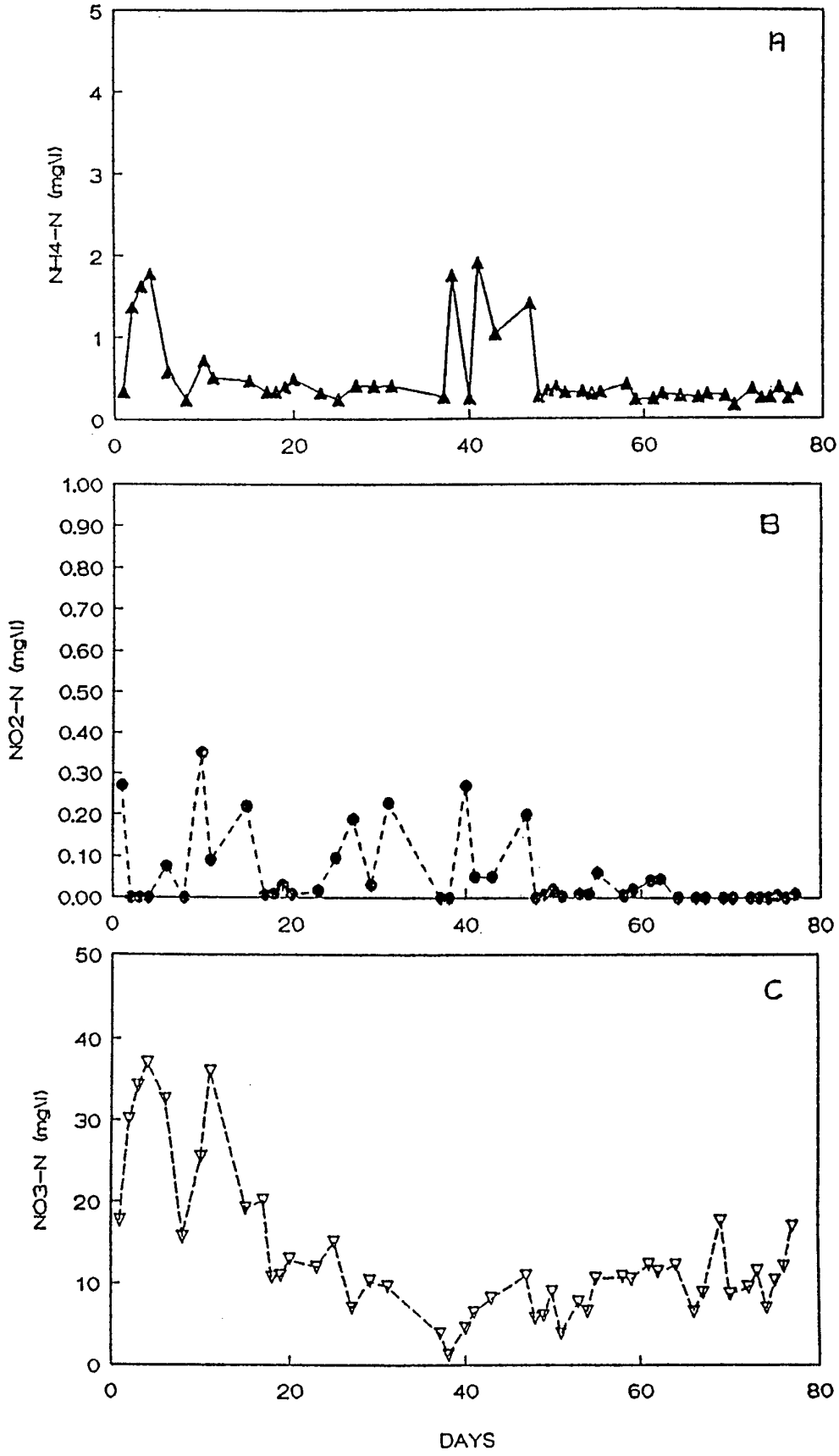
A
NH4-N (mg\l)
5
4
3
2
1
0
0
20
40
60
80
B
NO2-N (mg\l)
1.00
0.90
0.80
0.70
0.60
0.50
0.40
0.30
0.20
0.10
0.00
0
20
40
60
80
C
NO3-N (mg\l)
50
40
30
20
10
0
0
20
40
60
80
DAYS

FIG. 2

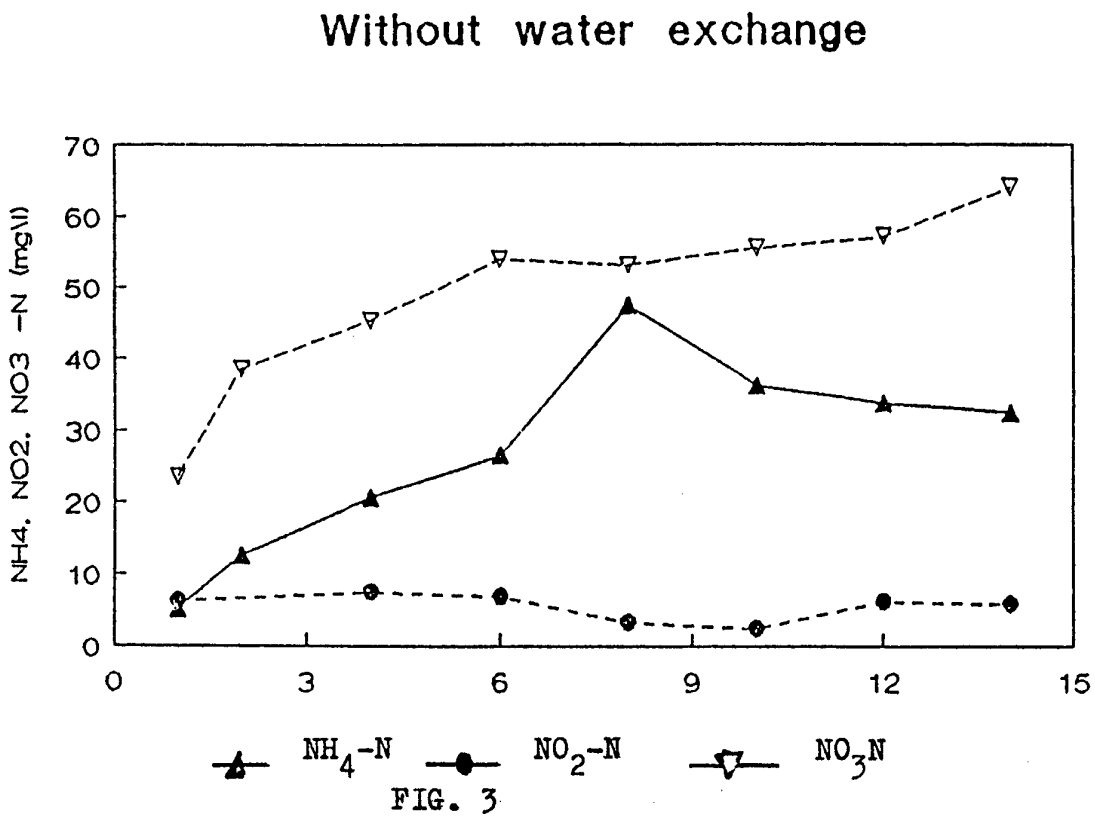
Without water exchange
NH4, NO2, NO3 -N (mg\l)
70
60
50
40
30
20
10
0
0
3
6
9
12
15
NH4-N
NO2-N
NO3N

FIG. 3

INTERNATIONAL SEARCH REPORT

national Application No
PCT/EP 93/03226

A. CLASSIFICATION OF SUBJECT MATTER
IPC 5 A01K63/04 C02F3/30

According to International Patent Classification (IPC) or to both national classification and IPC

B. FIELDS SEARCHED

Minimum documentation searched (classification system followed by classification symbols)
IPC 5 C02F A01K

Documentation searched other than minimum documentation to the extent that such documents are included in the fields searched

Electronic data base consulted during the international search (name of data base and, where practical, search terms used)

C. DOCUMENTS CONSIDERED TO BE RELEVANT

Category *	Citation of document, with indication, where appropriate, of the relevant passages	Relevant to claim No.
X	AQUACULTURAL ENGINEERING vol. 9 , 1990 , GREAT BRITAIN pages 217 - 234 JAAP VAN RIJN ET AL. 'AEROBIC AND ANAEROBIC BIOFILTRATION IN AN AQUACULTURE UNIT - NITRITE ACCUMULATION AS A RESULT OF NITRIFICATION AND DENITRIFICATION' cited in the application see page 218, paragraph 3 - page 220, paragraph 1 ---	1,4-7,9
X	DE,A,38 27 716 (METZ MANNHEIM GMBH) 8 March 1990 see column 1, line 3 - line 4 see column 2, line 61 - column 3, line 7 see column 3, line 42 - column 5, line 27; figure -----	1,4,7-9

☐ Further documents are listed in the continuation of box C.

☒ Patent family members are listed in annex.

* Special categories of cited documents :

"A" document defining the general state of the art which is not considered to be of particular relevance

"E" earlier document but published on or after the international filing date

"L" document which may throw doubts on priority claim(s) or which is cited to establish the publication date of another citation or other special reason (as specified)

"O" document referring to an oral disclosure, use, exhibition or other means

"P" document published prior to the international filing date but later than the priority date claimed

"T" later document published after the international filing date or priority date and not in conflict with the application but cited to understand the principle or theory underlying the invention

"X" document of particular relevance; the claimed invention cannot be considered novel or cannot be considered to involve an inventive step when the document is taken alone

"Y" document of particular relevance; the claimed invention cannot be considered to involve an inventive step when the document is combined with one or more other such documents, such combination being obvious to a person skilled in the art.

"&" document member of the same patent family

Date of the actual completion of the international search	Date of mailing of the international search report
10 February 1994	22. 02. 94

Name and mailing address of the ISA	Authorized officer
European Patent Office, P.B. 5818 Patentlaan 2 NL - 2280 HV Rijswijk Tel. (+31-70) 340-2040, Tx. 31 651 epo nl, Fax: (+31-70) 340-3016	Teply, J

Form PCT/ISA/210 (second sheet) (July 1992)

INTERNATIONAL SEARCH REPORT

Information on patent family members

I ational Application No
PCT/EP 93/03226

Patent document cited in search report	Publication date	Patent family member(s)	Publication date
DE-A-3827716	08-03-90	NONE	