Jan. 28, 1936. G. KUHN 2,029,240

FLUID PRESSURE MOTOR

Filed Oct. 4, 1932 2 Sheets-Sheet 1

Fig. 1.

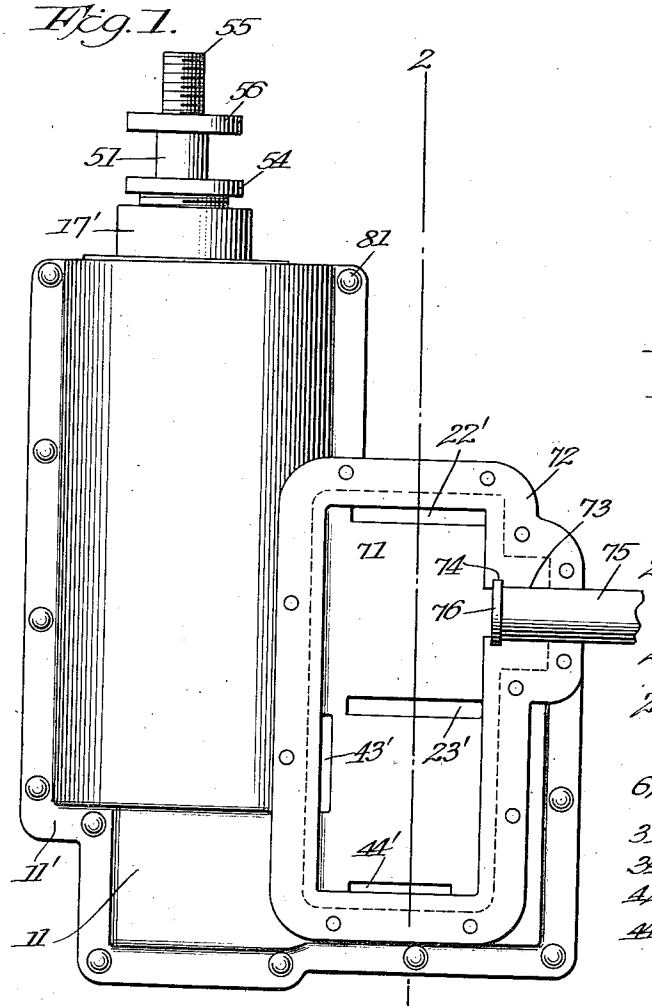

Fig. 2.

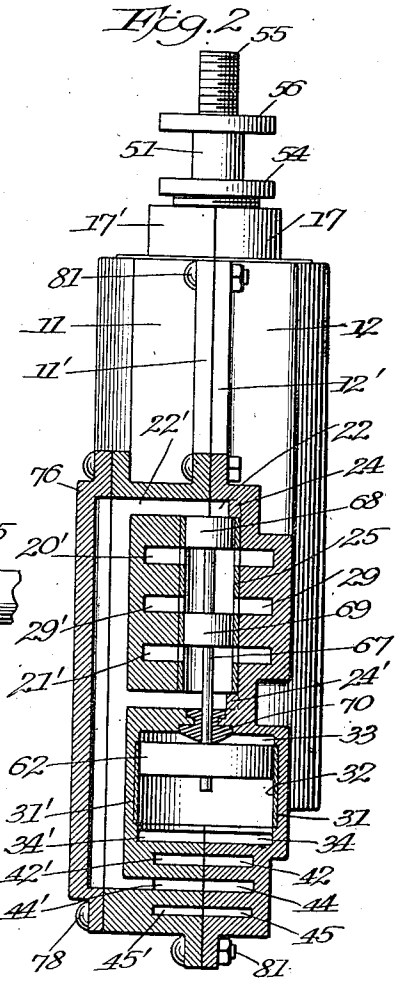

Fig. 3.

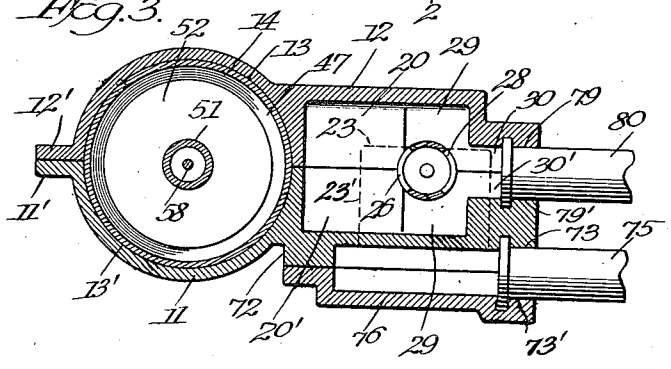

Inventor

George Kuhn

By Cushman, Bygnett, Darby & Cushman

Attorneys

Jan. 28, 1936. G. KUHN 2,029,240

FLUID PRESSURE MOTOR

Filed Oct. 4, 1932 2 Sheets-Sheet 2

Fig. 4.

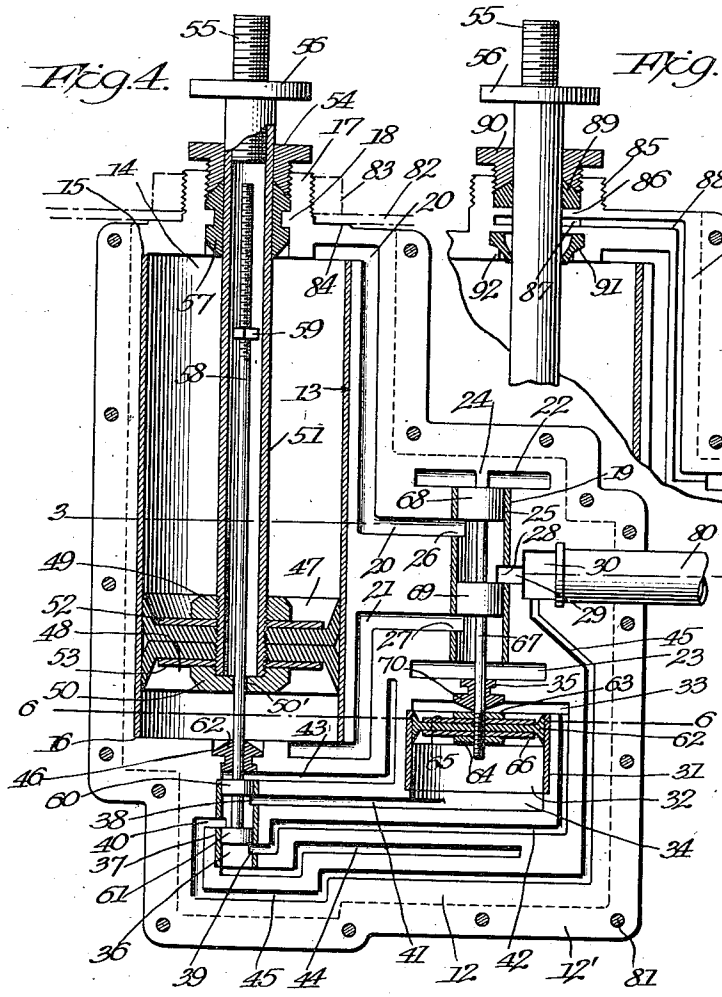

Fig. 5.

Fig. 7.

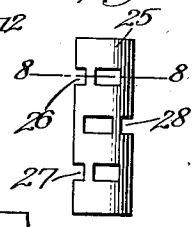

Fig. 8.

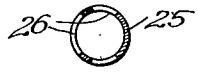

Fig. 9.

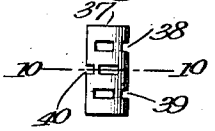

Fig. 6.

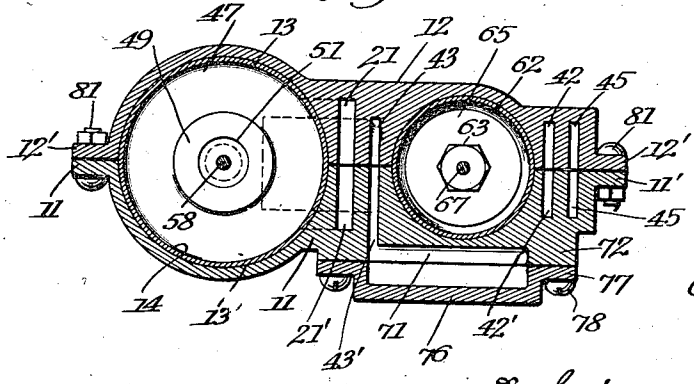

Fig. 10.



Inventor

George Kuhn.

By Cushman, Bryant, Darby & Cushman

Attorneys

Patented Jan. 28, 1936 2,029,240

UNITED STATES PATENT OFFICE

2,029,240

FLUID PRESSURE MOTOR

George Kuhn, Takoma Park, Md.

Application October 4, 1932, Serial No. 636,216

7 Claims. (Cl. 121—157)

The present invention relates to fluid pressure motors and has as a principal purpose to provide a motor wherein all the moving parts, with the exception of a portion of the main power transmitting element, are entirely enclosed within a single casing.

A further object of the invention is to provide a motor casing composed of complemental parts which conjointly define power and control chambers and fluid passages operatively connecting the various chambers so that the casing parts may be cheaply die cast. Preferably, the main portion of the motor casing is split in a plane in which the axes of the various movable elements lie.

The invention particularly contemplates a fluid pressure motor of reciprocating type provided with reciprocating control and pilot valves and it is a further object of the invention, in its preferred form, to provide the various casing chambers or recesses with liners for the guidance of the moving parts, these liners preferably being in the form of tubes of brass or the like clamped between the casing parts.

It is a further object of the invention to provide the casing with a common exhaust chamber into which all the exhaust ports open, this chamber being formed in part by a removable plate defining a pocket in conjunction with an exterior wall of the main casing parts.

It is a still further object of the invention to conserve space and greatly reduce the overall dimensions of the casing by providing flat ribbon-like fluid passages, these passages being constituted by relatively narrow and relatively deep grooves formed in the mating casing parts and registering when the parts are brought together.

Another object of the invention is to provide a direct rectilinear connection between the power piston and pilot valve, this connection including adjustable elements so that the stroke of the power piston can readily be varied.

In the accompanying drawings I have illustrated a preferred embodiment of the invention and further description of the invention will proceed with reference to these drawings, it being understood that the embodiment to be described is merely illustrative and not restrictive of the invention. Other objects than those particularly mentioned above will be evident from the specific description to follow:

In the drawings:

Figure 1 is an elevation of the new motor with the cover plate, above referred to, removed in order to show the arrangement of the outlet ports.

Figure 2 is a section on line 2—2 of Figure 1.

Figure 3 is a section on line 3—3 of Figure 4.

Figure 4 is a plan view of one of the motor parts with one of the main casing parts removed.

Figure 5 is a partial view similar to Figure 4 but showing a modified packing arrangement.

Figure 6 is a section on line 6—6 of Figure 4.

Figure 7 is an elevation of a liner for a control piston chamber.

Figure 8 is a section on line 8—8 of Figure 7.

Figure 9 is an elevation of a liner for a pilot piston chamber, and

Figure 10 is a section on line 10—10 of Figure 9.

Referring to the drawings, the casing is composed of two main complemental parts 11 and 12, Figures 1 to 6, these parts having contacting faces complementally recessed so that conjointly the casing parts define a number of chambers, here shown as cylindrical, operatively connected by fluid passages. For ease of manufacture the inner face of each casing part 11 and 12 is substantially plane and the axes of the various cylindrical chambers lie in this plane. The parts, as will appear, can be readily die cast without the use of any cores. It will be understood that while the casing parts preferably meet in a plane, the invention is not necessarily limited in this respect. While the interior face of casing part 11 has not been shown in detail, it will be understood that it is formed as an exact complement to the inner face of the part 12 as shown in Figure 4.

Referring to Figure 4, part 12 is provided with a semi-cylindrical recess 13 which receives half of a cylindrical tubular liner 14 which may conveniently be a section of brass tubing. At the top and bottom of recess 13, the liner 14 fits against shoulders 15 and 16 which hold it against longitudinal displacement. At its upper end, part 12 is provided with a semi-cylindrical collar 17 coaxial with the recess 13, this collar projecting externally and being provided with inner and outer threads. At its medial portion, the collar is provided internally with an annular rib 18.

To one side of recess 13, part 12 is provided with a smaller semi-cylindrical recess 19 whose axis is parallel with the axis of recess 13. A relatively narrow and relatively deep groove 20 formed in part 12 connects the upper end of recess 13 with recess 19 somewhat below the upper end of the latter and a similar groove 21 connects the lower end of recess 13 with the lower end of recess 19. The passage 21 debouches into recess 19 a distance

above the lower end of the latter equal to the distance of the end of passage 20 below the upper end of recess 19. At the top of recess 19, part 12 is provided with a relatively wide and flat recess 22 extending transversely of recess 19 and a similar recess 23 is provided at the lower end of recess 19. In recesses 22 and 23 are provided central lugs 24 and 24' whose opposed faces are flush with the parallel planes defining the top and bottom of recess 19. A cylindrical liner 25 is positioned in recess 19 and is held against longitudinal displacement between the described lugs, these lugs projecting slightly inwardly of the liner for a purpose which will later appear.

Liner 25 has an interrupted circumferentially extending slot 26 registering with passage 20 and a similar slot 27 registering with passage 21, these slots extending around a major portion of the circumference of the liner in order to efficiently handle the capacity of grooves 20 and 21 and their complemental grooves in the part 11, these being indicated at 20' and 21', Figure 2.

Liner 25 is provided with an interrupted slot 28 on its side opposite from slots 26 and 27 and midway between the latter, slot 28 registers with a groove 29 in part 12 which is in connection with an inlet chamber 30. In Figure 2, reference numeral 29' designates the groove complemental to groove 29. Throughout the drawings, such recesses or grooves as are shown in part 11 are designated by the primed reference numeral of the corresponding recess or groove of part 12.

Immediately below recess 19 and coaxial therewith is a semi-cylindrical groove 31 which receives a cylindrical liner 32 held against longitudinal movement by upper and lower shoulders, casing part 12 being provided with upper and lower grooves or recesses 33 and 34 at the ends of recess 31. Between recesses 23 and 33 part 12 is provided with a recess 35 having semi-cylindrical upper, lower and intermediate portions, the latter constituting a semi-annular rib separating the two former, this recess being coaxial with recesses 19 and 31.

Immediately below recess 13 and coaxial therewith, part 12 is provided with a comparatively small semi-cylindrical recess 36 in which is disposed a liner 37, the liner being held in the recess against longitudinal movement by means of suitable shoulders as shown. Liner 37 is provided on its right hand side with upper and lower slots 38 and 39 and on its left hand side with a central slot 40, these being formed as described with reference to liner 25. Slot 38 registers with one end of a groove 41 whose other end terminates in groove or recess 34, while slot 39 registers with one end of a groove 42 whose other end terminates in groove or recess 33.

A blind groove 43 terminates above recess 36 and a blind groove 44 terminates below recess 36. Slot 40 of liner 37 registers with one end of a groove 45 whose other end terminates in the inlet chamber 30.

Between recesses 13 and 36 is a coaxial recess 46 having upper, lower and intermediate semi-cylindrical portions, the latter dividing the two former so as to form a constriction therebetween.

It will be understood that while the liners have been described as being in position in the various recesses provided therefor, they are placed therein by separate operations upon the completion of the castings and prior to their insertion various other elements are associated therewith. The liners and associated parts will be assembled in the recesses provided therefor in one or the other of parts 11 and 12. In Figure 4 it is assumed that they have been assembled in part 12. It will be further understood that after the liners and associated parts have been assembled in one of the casing parts, to complete the assembly, it is only necessary to lay the other casing part over the first and secure the two together.

Referring particularly to Figure 4, liner 14 has therein a main or power piston here shown as comprising a pair of oppositely cupped yieldable discs 47 and 48 clamped together between nuts 49 and 50 threaded on the lower end of a tubular piston rod 51. Washers 52 and 53 between the nuts and discs 47 and 48 constitute stiffening means for the latter. Nut 50 is in the form of a cap nut provided with a central bore 50' coaxial with piston rod 51.

A gland nut 54 surrounds the upper end of piston rod 51 and into the upper end of the latter is threaded a screw stud or plug 55 which carries a jam nut 56 adapted to abut the upper end of the piston rod. A packing member 57 surrounds the piston rod below gland nut 54 and is circumferentially recessed at its medial portion to be engaged by the rib 18. Both ends of the packing member are conically shaped, the upper end for compression by the gland nut and the lower end for compression by pressure existing in the liner or cylinder above the piston.

Extending upwardly within the hollow piston rod 51 is a stem 58, the lower portion of the stem being guided in the bore 50' and the upper end being threaded and engaged by a split nut 59 which grips the stem with sufficient force to avoid its accidental displacement. On the lower end of stem 58 is formed an auxiliary control or pilot piston having the spaced enlargements 60 and 61 and above the pilot piston the stem is surrounded by a packing member 62 engageable in recess 46, the upper end of the packing member being conically shaped for compression by pressure existing below the main or power piston 47, 48. The pilot piston, comprising the piston portions or enlargements 60, 61, is assembled in liner 37, to constitute a pilot valve therewith, the spacing and length of the enlargements being such that in the upper limit position of the pilot piston, portion 60 lies between grooves 43 and 41 and portion 61 between grooves 45 and 39 so that groove 45 is in communication with groove 41 between the piston portions and groove 39 is in communication with groove 44. In the lower position of the pilot piston, groove 45 is placed in communication with groove 39 and groove 41 with groove 43.

Liner 32 has assembled therein a flexible cupped piston disc 62 clamped between nuts 63, 64 and washers 65, 66 on the lower threaded end of a valve stem 67. A valve piston on the upper end of stem 67, and assembled in liner 25 to constitute therewith a control valve, comprises two portions 68 and 69 and between the latter and piston 62, stem 67 is surrounded by a packing member 70 which is exactly the same as packing member 62 heretofore described, but inverted as regards position.

In the illustrated upper position of piston 62, the control valve piston constituted by piston portions 68 and 69 is so positioned that portion 68 is in abutment with lug 24 and is above groove 20 so that the latter is in communication with groove 29 and inlet opening 30, portion 69 being so positioned that groove 21 is in communication

with groove 23. In the lower position of the control valve piston, wherein the portion 69 abuts the lower lug 24', the inlet chamber 30 is placed in communication with groove 21 through groove 29 and groove 20 is placed in communication with groove 22.

Grooves 22, 23, 43 and 44 are provided for exhaust purposes and their complemental grooves 22', 23', 43' and 44' have portions extending through the wall of casing part 11 and debouching on the exterior thereof in a shallow recess 71 which is walled by a flange 72 whose outer face preferably lies in a plane parallel to the plane of division of the parts 11 and 12. The recess flange is provided with a semi-cylindrical recess 73 provided near its inner end with a semi-annular groove 74, and an exhaust pipe 75 is disposed in the recess, the pipe having a flanged end 76 engaged in groove 74. A cover plate 76 has a border portion or flange 77 adapted to overlie flange 72, the two flanged portions being secured together as by screws 78 so that an exhaust pocket is defined. The cover plate has a recess 73' complemental to recess 73 so that the end of tube 75 is securely clamped between the two parts.

Parts 11 and 12 are provided with complemental semi-cylindrical recesses 79 and 79', similar to recesses 73 and 73' just described, in which is engaged the flanged end of an inlet pipe 80. Parts 11 and 12 are provided with peripheral flanges 11' and 12' provided with apertures which register when the parts are brought together, bolts or rivets 81 being passed through the apertures to secure the parts together and clamp inlet pipe 80 and the various liners in position. When the parts are thus brought together, the gland nut 54 is screwed home to the position shown in Figure 4 and the motor is ready for operation, the upper threaded end of stud 55 being securable to any mechanism to be reciprocated. Part 11 has a neck portion 17' complemental to neck portion 17 of part 12 and these may be externally threaded as shown in Figure 4. For the support of the motor the neck may be passed through an aperture in a supporting plate as at 82 and a nut 83 screwed on the neck to clamp the plate between it and an abutment shoulder 84 at the base of the neck.

It will be understood that to make the casing watertight the contacting faces of the several parts may be painted or suitable gaskets may be provided.

Assuming the casing to be assembled and pipe 80 to be connected to a source of fluid pressure such as a house water system, the power piston, Figure 4, is near the end of its down stroke, fluid under pressure entering the top of the cylinder through groove 29, the control valve and groove 20, the lower end of the main cylinder being connected through groove 21, the control valve and grooves 23 and 23' into the exhaust pocket for discharge through pipe 75. Just before the power piston reaches the bottom of its stroke, the lower end of stud 55 abuts the upper end of stem 58 and moves the pilot valve piston to its lower position. Hereupon fluid under pressure in groove 45 is directed by the pilot valve through groove 42 into recess 33 at the top of piston 62 so that the latter is moved downwardly, the fluid beneath piston 62 being led to the discharge pocket through groove 41, the pilot valve and grooves 43 and 43'. The control valve, being moved to its lower limit, throws the supply into groove 21 so that the power piston is forced upwardly, the fluid at the top of the piston exhausting through groove 20, the control valve and grooves 22 and 22'. As the power piston nears the top of its stroke, nut 50 abuts nut 59 and the pilot piston is returned to the position shown in Figure 4 so that fluid under pressure is led to the lower side of piston 62 through groove 45, the pilot valve and groove 41, piston 62 being thus moved upwardly and returned to the position shown in Figure 4. Fluid above piston 62 is exhausted through conduit 42, the pilot valve and grooves 44 and 44'. The power piston due to the movement of the control valve is again caused to move downwardly and the sequence is repeated.

When the power piston is operated at full stroke, the nuts 49 and 50 cooperate with the ends of chamber 13, 13' as stops. However, positive limiting means are not necessary and in fact do not exist if the stroke of the piston is shortened. This can be done by appropriately adjusting nut 59 and stud 55.

Firm frictional contact of packing element 62 with stem 58 should be sufficient to hold the latter in adjusted position against gravity and the action of the pressure fluid on the upper end of stem 58. Auxiliary means for maintaining the stem in its adjusted position may of course be provided if desired. It will be remembered that grooves 43 and 44 both communicate with the exhaust chamber so that each is subjected to the pressure existing in the latter.

In Figure 5 I have shown a modified packing arrangement for the piston rod 51. According to this figure the neck 85 is provided internally with an annular rib 86 which surrounds the piston rod with a close running fit. Rib 86 is provided with an annular groove 87 which through a bleed groove 88 is in communication with exhaust recess 22. Above rib 86 is a packing 89 adapted to be compressed by a gland nut 90. An externally conical packing washer 91 is retained between the lower side of rib 86 and a ledge 92, the tip of packing 91 being readily compressible so that pressure in the upper end of the power cylinder will cause the tip to engage the piston rod closely around the latter. The base of the packing member 91 is preferably somewhat spaced from the piston rod as shown in Figure 5 in order to enhance the compressibility of the tip and to minimize friction.

From the above it will be evident that I have provided a fluid pressure motor of simplified construction wherein each casing part is adapted to be made by a simple die casting process and all the parts readily assembled into a compact whole, this compactness being attributable to a considerable extent to the use of the ribbon-like passages as particularly shown in Figures 2 and 6. It will be understood that variation may be made from the detailed construction shown and described without departure from the scope of the invention, and accordingly I do not limit myself except as in the following claims.

I claim:

1. In a fluid pressure motor, a casing comprising complemental parts defining conjointly power and control chambers and fluid passages operatively connecting said chambers, the arrangement being such that the passages do not cross each other and that each of said parts and the portions of the chambers and passages therein are enabled to be formed completely in a single die casting operation, tubular liners for said chambers clamped between said parts, and means

engaging the liners to hold them positively against axial displacement.

2. In a fluid pressure motor, a casing comprising complemental parts defining conjointly cylindrical power and control chambers having their axes in a common plane between the parts and so arranged that they do not cross each other, said parts also defining conjointly fluid passages operatively connecting said chambers, each of said parts and the portions of chambers and passages therein being producible in a single die casting operation, and tubular liners for said chambers clamped between said parts.

3. In a fluid pressure motor, a casing, a power piston reciprocable in a cylinder in said casing, a control piston reciprocable in a cylinder in said casing to control the fluid supply to and exhaust from the power cylinder, an actuating piston for said control piston reciprocable in a cylinder in said casing, a pilot piston reciprocable in a cylinder in said casing to control fluid supply to and exhaust from said actuating piston and cylinder, and a control connection between the power piston and pilot piston, the axis of each piston being parallel to a line parallel to the axes of the other pistons, and all of said axes lying substantially in a common plane, the casing being split in said plane and having non-crossing supply and exhaust passages defined between its parts and each of said cylinders being constituted by a liner clamped between the casing parts.

4. In a fluid pressure motor, a casing, a power piston reciprocable in a cylinder in said casing, a control piston reciprocable in a cylinder in said casing to control the fluid supply to and exhaust from the power cylinder, an actuating piston for said control piston reciprocable in a cylinder in said casing, a pilot piston reciprocable in a cylinder in said casing to control fluid supply to and exhaust from said actuating piston and cylinder, and a control connection between the power piston and pilot piston, the axes of all of said pistons lying substantially in a common plane, the casing being split in said plane and having non-crossing supply and exhaust passages defined between its parts and each of said cylinders being constituted by a liner clamped between the casing parts.

5. In a fluid pressure motor, a split casing whose parts define conjointly chambers for the reception of main and auxiliary driven elements, the casing split being disposed so that the casing parts may be brought together to enclose said driven elements in the respective chambers, said parts also defining conjointly fluid passages operatively connecting said chambers the arrangement being such that the passages do not cross each other and that each of said parts and the portions of the chambers and passages therein are enabled to be formed completely in a single die casting operation, and cylinder liners in said chambers clamped between the casing parts.

6. In a fluid pressure motor, a casing comprising complemental parts defining conjointly power and control chambers and fluid passages operatively connecting said chambers, said fluid passages being constituted by relatively narrow and relatively deep grooves in one part registering with similar grooves in a complemental part, the arrangement being such that the passages do not cross each other and that each of said parts and the portions of the chambers and passages therein are enabled to be formed completely in a single die casting operation, and cylinder liners in said chambers clamped between the casing parts.

7. In a fluid pressure motor, a casing comprising complemental parts having registering recesses in their adjacent faces; said recesses when the parts are brought together forming a main power chamber, a control chamber, an auxiliary power chamber in alignment with said control chamber, a pilot chamber and inlet and outlet passages for said chambers; a liner in each of said chambers, means securing the casing parts together whereby said liners are clamped in position, power pistons reciprocable in the liners in said power chambers respectively, double valve pistons reciprocable in said liners in said control and pilot chambers respectively, each of said last named liners being provided medially with a slot registering with an inlet passage therefor and adjacent its ends with slots registering with outlet passages therefor, there being other outlet passages in communication with the ends of said last named liners respectively, a connection between the main power piston and the pilot piston whereby the latter is operated to control fluid flow to and escape from the auxiliary power chamber, and a connection between the auxiliary power piston and the control piston whereby the latter is operated to control fluid flow to and escape from the main piston chamber, all of said passages being in non-crossing relation to each other and each of the casing parts with its recesses being producible in a single die casting operation.

GEORGE KUHN.