(19) Octrooicentrum Nederland

(11) 2038779

(12) A OCTROOIAANVRAAG

(21) Aanvraagnummer: **2038779**

(22) Aanvraag ingediend: **4 oktober 2024**

(62)

(51) Int. Cl.:
A61J 3/07 (2024.01)

(30) Voorrang:
14 juni 2024 CN 202410768729.7

(41) Aanvraag ingeschreven:
24 oktober 2024

(43) Aanvraag gepubliceerd:
25 oktober 2024

(71) Aanvrager(s):
Zhaoqing Tianying Biotechnology Co., Ltd. te Zhaoqing City, China, CN

(72) Uitvinder(s):
Meiqing Liang te Zhaoqing City (CN)
Zhuguang He te Zhaoqing City (CN)
Yongquan Liang te Zhaoqing City (CN)

(74) Gemachtigde:
ir. F.A. Geurts c.s. te Den Haag

(54) **An Organic Selenium Capsule Preparation Equipment with the Effect of Inhibiting Cancer Cells**

(57) The invention belongs to the technical field of capsule production, in particular to an organic selenium capsule preparation equipment with the effect of inhibiting cancer cells. In view of the existing traditional organic selenium capsule preparation equipment, raw material processing requires the use of multiple equipment, complex operation, low efficiency, easy loss or pollution during raw material transfer, affecting the quality, uneven mixing and drying of raw materials, easy to affect the efficacy and safety and other problems, the following scheme is proposed, including the base, the top of the base is fixed with a mixer and drying box. The mixer comprises a mixing bucket, a heat insulation bucket and a top cover. In the present invention, the preparation process of organic selenium capsule is simplified through the integrated preparation equipment, the transfer of raw materials among multiple equipment is reduced, and the risk of raw material loss and pollution is reduced. At the same time, the unique mixing and drying technology ensures the uniform mixing of raw materials and the uniformity of drying effect, further improving the efficacy and safety of the product.

Deze publicatie komt overeen met de oorspronkelijk ingediende stukken.

An Organic Selenium Capsule Preparation Equipment with the Effect of Inhibiting Cancer Cells

Technical Field

The invention relates to the technical field of capsule production, in particular to an organic selenium capsule preparation equipment with the effect of inhibiting cancer cells.

Background Technology

In the field of medicine and nutritional supplements, organic selenium capsules are favored as a highly effective health product due to their unique biological activity, including the ability to inhibit cancer cell growth and remove free radicals from the body. However, despite the significant health benefits of organic selenium capsules, the preparation process faces a number of technical challenges, which limits their mass production and quality improvement.

In the traditional preparation of organic selenium capsules, the mixing, heating and drying of raw materials into powder are the key steps. In traditional preparation methods, these steps often need to be carried out separately in different equipment, which not only increases the complexity and operational difficulty of the preparation process, but also affects the preparation efficiency and product stability, and because raw materials need to be transferred between multiple equipment, the probability of raw materials being lost or contaminated increases, which easily affects the quality of products.

In the mixing and drying step, the traditional technology is often difficult to ensure the uniform mixing of raw materials and the uniformity of the drying effect, the uneven mixing of raw materials may lead to the instability of the product composition, and the difference in the drying effect may lead to the inconsistency of the physical properties of the product such as moisture content and

particle size, thus affecting the efficacy and safety of the product.

In view of the above problems, the invention document proposes an organic selenium capsule preparation equipment which has the effect of inhibiting cancer cells.

Content of Invention

The invention aims to solve the problem of raw material processing in the preparation of traditional organic selenium capsules in the prior art

It is necessary to use multiple equipment, complex operation, low efficiency, easy loss or pollution when raw materials are transferred, affecting quality, and uneven mixing and drying of raw materials are easy to affect the efficacy and safety and other shortcomings, and a kind of organic selenium capsule preparation equipment with inhibiting cancer cells is proposed.

In order to realize the above purpose, the invention adopts the following technical scheme:

An organic selenium capsule preparation device with inhibiting cancer cells comprises:

Base. The top of the base is fixed with a mixer and a drying box;

Mixer. The mixer comprises a mixing bucket, a heat insulation bucket and a top cover;

Drying chamber. The interior of the drying chamber is divided into two parts, a liquid storage chamber and a drying chamber, and a plurality of drying boxes are arranged in the drying chamber;

Heating component. The heating component comprises an intake pipe and a transmission pipe fixed on both sides of the drying box, and one end of the intake pipe is divided into three parts and runs through one side of the drying box, the air end of the intake pipe corresponds to the drying box and is located above the drying box, one end of the gas pipe is divided into more, the air inlet end of the gas pipe is fixed through one side of the drying chamber;

Stirring component. The stirring component comprises a rotating shaft, one end of the rotating shaft is rotated through the top cover and connected to the mixing bucket, the rotating shaft is fixed on the outer wall of the mixing plate, the top of the top cover is provided with a drive motor, the output end of the drive motor is fixed with a first bevel gear, the outer wall of the rotating shaft is fixed with a second bevel gear. The first bevel gear meshes with the second bevel gear.

In one possible design, the heat insulation bucket fixed sleeve is arranged on the outer wall of the mixing bucket, and a heating chamber is formed between the mixing bucket and the heat insulation bucket, the top cover is fixed on the top of the mixing bucket and the heat insulation bucket, and the outer wall of the top cover is fixed through a plurality of feeding pipes.

In one possible design, the air outlet end of the gas pipe is fixed through the top cover and extends to the heating chamber between the mixing bucket and the heat insulation bucket, the heating chamber is provided with a spiral heating pipe, the spiral heating pipe spiral wound on the outer wall of the mixing bucket, the air outlet end of the gas pipe is fixed connected with one end of the spiral heating pipe. The other end of the spiral heating pipe is fixed connected with a exhaust pipe also includes a first pump, the first pump is fixed on the bottom inner wall of the liquid storage chamber, the first pump outlet end is fixed connected with a first infusion pipe, the first infusion pipe end runs through the side of the liquid storage chamber and extends to the outside of the drying box, the first infusion pipe is fixed connected with the outer wall of the liquid pipe, One end of the liquid outlet pipe is fixed through one side of the outer wall of the drying box and extends into the drying chamber, and the liquid outlet pipe corresponds to the drying box.

The invention relates to a method for preparing organic selenium capsules with the effect of inhibiting cancer cells, including the following steps:

Raw material transportation and mixing: The user delivers a variety of raw materials to the mixing bucket through multiple feeding pipes, starts the driving motor to drive the rotating shaft to rotate, and then uses the mixing plate to fully agitate the solution in the bucket to ensure that the material is evenly mixed and improve the preparation efficiency of the organic selenium solution;

Solution preparation and transfer: After mixing, the user starts the second pump and transfers the prepared organic selenium solution to the liquid storage chamber through the second infusion pipe for the next batch of solution preparation;

Solution drying and collection: The solution in the liquid storage chamber is extracted by the first pump, and injected into multiple drying boxes through the first infusion pipe and the liquid outlet pipe. Then, the external hot air equipment is started, and the hot air is transported into the drying chamber by the intake pipe to dry the solution in the drying box. After drying, the user can suspend the hot air transportation, and take out the drying box through the feeding port to collect organic selenium powder, which is convenient for subsequent capsule processing.

Hot air circulation and reuse: In the drying process, the hot air is discharged from the drying chamber through the gas pipe and enters the spiral heating pipe, which is wrapped around the outer wall of the mixing bucket to heat the solution in the mixing bucket and improve the preparation efficiency of the solution. Meanwhile, the flow of the hot air in the drying chamber is maintained to ensure the drying effect.

Drying box shaking and drying efficiency: when the rotating shaft rotates, the rotating plate rotates, the rotating plate drives the moving plate through the clamping

column to move, and then the push-pull plate drives the swing rod to swing, achieving the left and right shaking of the placing plate and the drying box, this design improves the fluidity of the solution in the drying box, so that it is fully in contact with the hot air, thereby improving the drying efficiency and ensuring excellent processing effect.

Beneficial effects:

In the invention, the organic selenium capsule preparation equipment having the effect of inhibiting cancer cells realizes the uniform stirring of the solution in the mixer through the stirring component, ensuring the adequacy of the raw material mixing. At the same time, the design of the heating component makes the temperature in the drying chamber rise uniformly and improves the drying efficiency. The introduction of stirring components makes the solution in the drying box heat evenly, further improving the drying efficiency and the quality of the produced drugs;

In the invention, the organic selenium capsule preparation equipment with the effect of inhibiting cancer cells realizes the recycling of hot air through the design of intake pipe and transmission pipe, which not only reduces energy consumption, but also improves the utilization rate of hot air. At the same time, the design of spiral heating pipe enables the solution in the mixing bucket to be uniformly heated, avoiding the problem of local overheating or insufficient temperature.

In the invention, through the integrated preparation equipment, the preparation process of organic selenium capsule is simplified, the transfer of raw materials between multiple equipment is reduced, the risk of raw material loss and pollution is reduced, and the quality and stability of the product are improved. At the same time, the unique mixing and drying technology ensures the uniform mixing of raw materials and the uniformity of drying effect. Further enhance the efficacy and safety of the product.

Explanation on Drawings

Drawing 1 is a three-dimensional structure diagram of an organic selenium capsule preparation device which has the effect of inhibiting cancer cells.

Drawing 2 is a three-dimensional structure diagram of an organic selenium capsule preparation device with the effect of inhibiting cancer cells from another perspective.

Drawing 3 is a schematic diagram of the section-view structure of the organic selenium capsule preparation equipment which has the effect of inhibiting cancer cells.

Drawing 4 is a schematic diagram of a mixer section view amplification structure of an organic selenium capsule preparation device with the function of inhibiting cancer cells.

Drawing 5 is a schematic diagram of the drying box section and enlargement structure of the organic selenium capsule preparation equipment which has the effect of inhibiting cancer cells.

Drawing 6 is a schematic diagram of the drying box installation structure of an organic selenium capsule preparation device with the function of inhibiting cancer cells.

Drawing 7 is a structure diagram of a sloshing component of an organic selenium capsule preparation device with the function of inhibiting cancer cells.

In the drawings: 1. base; 2. mixer; 3. drying chamber; 4. intake pipe; 5. exhaust pipe; 6. mixing bucket; 7. heat insulation bucket; 8. top cover; 9. spiral heating pipe; 10. liquid storage chamber; 11. drying chamber; 12. gas transmission pipe; 13. feeding pipe; 14. rotating shaft; 15. mixing plate; 16. driving motor; 17. the first bevel gear; 18. the second bevel gear; 19. rotating plate; 20. the first pump; 21. the first infusion pipe; 22. liquid outlet pipe; 23. drying box; 24. clamping plate; 25. placing plate; 26. limit clamping slot; 27. clamping column; 28. the first chute; 29. moving plate; 30. T-shaped bracket; 31. push-pull plate; 32. fixed column; 33. oscillating bar; 34. the

second chute; 35. the second infusion pipe; 36. the second pump; 37. movable door.

Specific Implementation Method

The following is a clear and complete description of the technical scheme in the implementation method of the invention in combination with the drawings attached to the implementation method of the invention. Obviously, the described implementation method is only a part of the implementation method of the invention, but not the whole implementation method.

Implementation method 1

Referring to Drawing 1-Drawing 7, an organic selenium capsule preparation equipment with inhibiting cancer cells comprises a base 1, a mixer 2, a drying chamber 3, a stirring component, a heating component and a stirring component.

Base 1 is the supporting part of the whole preparation device, the top of which is fixed with mixer 2 and drying chamber 3. Mixer 2 is used for the production of organic selenium solution, while drying chamber 3 is used for the drying of organic selenium solution to complete the preparation of capsule powder.

The mixer 2 is composed of mixing bucket 6, heat insulation bucket 7 and top cover 8. The heat insulation bucket 7 is fixed on the outer wall of mixing bucket 6, and a heating chamber is formed between them. The top cover 8 is fixed on the top of mixing bucket 6 and heat insulation bucket 7, and the outer wall is fixed through a plurality of feeding pipes 13, which is used to connect with a plurality of feeding pipes to realize the transportation of various raw materials;

The inside of the drying chamber 3 is divided into two parts: liquid storage chamber 10 and drying chamber 11 through a partition. The liquid storage chamber 10 is used for storing the processed organic selenium solution, while a plurality of drying boxes 23 are arranged in the drying chamber 11 for drying the organic selenium solution in

batches to complete the preparation of the organic selenium capsule powder.

In order to realize the transportation of organic selenium solution, a first pump 20 is also arranged, and the first pump 20 is fixed on the bottom inner wall of the liquid storage chamber 10, one end of the water outlet is fixed connected with the first infusion pipe 21, one end of the first infusion pipe 21 runs through one side of the liquid storage chamber 10 and extends to the outside of the drying tank 3, and the outer wall is fixed connected with a plurality of liquid outlet pipes 22. One end of a plurality of liquid outlet pipes 22 is fixed through one side of the outer wall of the drying chamber 3 and extends into the drying chamber 11, corresponding to a plurality of drying boxes 23, and the plurality of liquid outlet pipes 22 are located above the corresponding drying box 23 to complete the transportation of the solution to be dried.

In the design of the stirring component, the invention adopts a rotating shaft 14 that runs through the top cover 8, one end of the rotating shaft 14 extends to the mixing bucket 6, and a plurality of mixing plates 15 are fixed on the outer wall to complete the mixing and mixing of the solution in the mixing bucket 6. A driving motor 16 is fixed on the top of the top cover 8, and a first bevel gear 17 is fixed on one end of the output shaft. The outer wall fixing sleeve of the rotating shaft 14 is provided with a second bevel gear 18, and the first bevel gear 17 and the second bevel gear 18 are engaged to complete the rotating drive of the rotating shaft 14.

Heating components are arranged to improve drying efficiency; Specifically, the heating component comprises an intake pipe 4 which is fixed on one side of the drying chamber 3. One end of the intake pipe 4 is divided into three parts and runs through one side of the drying chamber 3. A plurality of air outlet ends correspond to a plurality of drying boxes 23 and are respectively located above a plurality of drying boxes 23. A plurality of air inlet ends

are fixed through one side of the drying chamber 3, and the gas transmission pipe 12 is used to discharge the hot air in the drying chamber 11 to improve the flow of the hot air in the drying chamber 11.

Further, the air outlet ends of the gas transmission pipe 12 is fixed through the top cover 8 and extends into the heating chamber between the mixing bucket 6 and the heat insulation bucket 7. The inside of the heating chamber is provided with a spiral heating pipe 9, which is spirally wound around the outer wall of the mixing bucket 6. The air outlet ends of the gas transmission pipe 12 is fixed connected with one end of the spiral heating pipe 9, which is used to heat the inside of the mixing bucket 6. The other end of the spiral heating pipe 9 is fixed to connect with the exhaust pipe 5, and one end of the exhaust pipe 5 is fixed through one side of the heat insulation bucket 7 to complete the discharge of hot air;

In addition, after the hot air in the drying chamber 11 is discharged through the gas transmission pipe 12, part of the hot air is sent into the heating chamber between the mixing bucket 6 and the heat insulation bucket 7. The hot air is heated through the spiral heating pipe 9 to the mixing bucket 6 to further promote the mixing and reaction of the solution. After use, the hot air will be discharged through the exhaust pipe 5 to achieve the recycling of heat energy.

In order to improve the drying efficiency, a stirring component is arranged in the drying chamber 3, which is mainly composed of a plurality of placing plates 25, swinging rod 33, push-pull plate 31. T-shaped bracket 30, rotating plate 19 and clamp column 27. A plurality of placing plates 25 are rotated to the inner wall of the drying chamber 11 for placing and fixing the drying box 23. These placing plates 25 are arranged from top to bottom and are rotated through one side of the drying chamber 3 by a fixed shaft so that they can rotate around a fixed shaft. At one end of the fixed shaft, an oscillating bar 33 is fixed and a second chute 34 is provided inside each oscillating bar 33;

A plurality of push-pull plates 31 are connected to one side of the drying chamber 3 by sliding limit gusset plates. These push-pull plates 31 are matched with swing rod 33. In particular, one side of each push-pull plate 31 is fixed with a fixed column 32, which is sliding in the second chute 34 of two adjacent swing rods 33. One end of a plurality of push-pull plates 31 is fixed on the T-shaped bracket 30, and the T-shaped bracket 30 is located outside the drying chamber 3;

In order to realize the reciprocating movement of the T-shaped bracket 30, the rotating plate 19 is fixed on the top of the turning shaft 14, which is driven by the drive motor 16 through the first bevel gear 17 and the second bevel gear 18, and the top of the rotating plate 19 is fixed on the clamping column 27, which is located at the position where the top of the rotating plate 19 deviates from the center of the circle. A first chute 28 is provided in the moving plate 29 on one side of the T-shaped bracket 30, and the inner wall of the first chute 28 is matched with the clamping column 27. With the rotation of the rotating plate 19, the clamping column 27 will slide in the first chute 28, thereby driving the moving plate 29 to move, and the reciprocating movement of the moving plate 29 will drive the push-pull plate 31 to slide along the limit gusset plate. Then the oscillating bar 33 is constantly swinging, and the swing of the oscillating bar 33 will drive the placing plate 25 to rotate through the fixed shaft, and finally realize the shaking of the drying box 23.

This application may be used in the field of capsule production technology, as well as in other fields applicable to this application.

Implementation method 2

Referring to Drawing 1 and Drawing 6, improvements are made on the basis of implementation method1: An organic selenium capsule preparation equipment with the effect of inhibiting cancer cells is applied to the technical field of capsule production;

In order to ensure that the drying box 23 will not slip off in the shaking process, the invention is fixed on the bottom of the drying box 23, and at the same time, two limit clamping slots 26 are arranged on one side of the placing plate 25, and the two limit clamping slots 24 located at the bottom of the same drying box 23 are respectively sliding connected with two adjacent limit clamping slots 26. Thus, the drying box 23 and the placing plate 25 are fixed.

In addition, in order to facilitate the transfer of the organic selenium solution prepared in the mixer 2 to the liquid storage chamber 10 of the drying chamber 3, a second infusion pipe 35 is arranged between the mixer 2 and the drying chamber 3. One end of the second infusion pipe 35 is fixed through the insulated bucket 7 and the mixing bucket 6, and the other end is fixed through the side of the drying chamber 3 and extends into the liquid storage chamber 10. A second pump 36 is arranged on the second infusion pipe 35 to complete the transfer of the solution.

Finally, in order to conveniently take out the drying box 23, the outer wall of the drying chamber 3 is provided with a plurality of taking out ports corresponding to the plurality of drying boxes 23; A movable door 37 is hinged on the inner wall of the taking port to seal the taking port and prevent heat loss during the drying process.

However, as the technical personnel in the field are well known, the working principle and wiring method of the drive motor 16, the first pump 20 and the second pump 36 are commonplace, which are conventional means or common knowledge, and will not be repeated here, and the technical personnel in the field can be arbitrarily selected according to their needs or convenience.

The working principle and use process of this technical solution are as follows:

When used, the user can use multiple feeding pipes 13 to complete the transportation of a variety of raw materials to the mixing bucket 6, a variety of materials in the mixing bucket 6 mixed reaction, can complete the preparation of

organic selenium solution; When preparing the solution, the user can start the driving motor 16, which can drive the rotating shaft 14 to rotate, and then use multiple mixing plates 15 to agitate the solution in the mixing bucket 6, which can ensure that the multiple materials in the mixing bucket 6 can be fully mixed and reacted, which can improve the preparation efficiency of the organic selenium solution; After the preparation of organic selenium solution is completed, the user can start the second pump 36, and transfer the prepared organic selenium solution to the liquid storage chamber 10 by the second infusion pipe 35. At this time, the next batch of solution will be prepared in the mixing bucket 6; After the organic selenium solution is stored in the liquid storage chamber 10, the user can use the first pump 20 to extract the solution, and use the first infusion pipe 21, the liquid outlet pipe 22 to inject a certain amount of solution into multiple drying boxes 23, after which the user can start the external hot air equipment, and use the intake pipe 4 to transport hot air to the drying chamber 11. The hot air flowing in the drying chamber 11 will dry the solution in several drying boxes 23 until the solution in drying box 23 is dried into powder, and the user can suspend the hot air delivery and take out the drying box 23 by using the material extraction port to complete the collection of organic selenium powder and facilitate the subsequent processing and production of capsules. In the drying process, the hot air after use will be discharged from the drying chamber 11 through the gas transmission pipe 12, which can ensure good flow of the hot air in the drying chamber 11. The discharged hot air will enter the spiral heating pipe 9, which is helically wound on the outer wall of the mixing bucket 6. After the hot air passes through the inside, the spiral heating pipe 9 can heat the solution inside the mixing bucket 6. The efficiency of solution preparation can be further improved. At the same time, the rotating shaft 14 will also drive the rotating plate 19 to rotate when rotating, and the rotating plate 19

can constantly drive the moving plate 29 to move back and forth through the clamping column 27, which can realize the reciprocating movement of multiple push-pull plates 31, and the multiple push-pull plates 31 can drive the corresponding swing rod 33 to swing through the second chute 34 when reciprocating. It can realize the left and right rotation of a plurality of placing plates 25, and then drive a plurality of drying boxes 23 to shake around, which can improve the fluidity of the solution inside the drying box 23, and make it fully in contact with the hot air, which is conducive to improving the drying efficiency of the organic selenium solution and ensuring good processing effect.

The above is only the best concrete implementation method of the invention, but the scope of protection of the invention is not limited to this, any technical personnel familiar with the technical field within the technical scope disclosed by the invention, according to the technical scheme of the invention and its invention idea equivalent replacement or change, shall be covered by the scope of protection of the invention.

CONCLUSIES

1. Een apparaat voor het bereiden van organische seleniumcapsules met een remmende werking op kankercellen, met het kenmerk dat het omvat:

- basis (1), waarbij de bovenkant van de basis (1) vastgemaakt is aan een menger (2) en een droogkamer (3);

- menger (2), waarbij de menger (2) samengesteld is uit een mengvat (6), een warmteisolatievat (7) en een deksel (8);

- droogkamer (3), waarbij de binnenkant van de droogkamer (3) is verdeeld in twee delen: een vloeistofopslagkamer (10) en een droogkamer (11) door middel van een tussenschot, waarbij in de droogkamer (11) een veelheid aan droogdozen (23) gerangschikt zijn;

- verwarmingselement, waarbij het verwarmingselement een aan beide zijden van de droogkamer (3) vast gemonteerde inlaatbuis (4) en transmissiebuis (12) omvat, waarbij één uiteinde van de inlaatbuis (4) in drie delen verdeeld is en door één zijde van de droogkamer (3) heen loopt, waarbij de luchtuitlaatuiteinden van de inlaatbuis (4) overeenstemmen met de droogdoos (23) en zich boven de droogdoos (23) bevindt, waarbij één uiteinde van de gastransmissiebuis (12) in een veelheid verdeeld is, waarbij het luchtinlaatuiteinde van de gastransmissiebuis (12) door één zijde van de droogkamer (3) heen vastgemaakt is;

- roerelement, waarbij het roerelement een roterende as (14) omvat, waarbij één uiteinde van de roterende as (14) door het deksel (8) heen roteert en verbonden is met het mengvat (6), waarbij de buitenwand van de roterende as (14) vastgemaakt is aan een mengplaat (15), en waarbij de bovenkant van het deksel (8) is voorzien van een aandrijfmotor (16), waarbij het uitvoeruiteinde van de aandrijfmotor (16) vastgemaakt is aan een eerste kegeltandwiel (17), waarbij de buitenwand van de roterende as (14) voorzien is van een tweede kegeltandwiel (18), en waarbij het eerste

kegeltandwiel (17) en het tweede kegeltandwiel (18) in elkaar grijpen.

2. Een apparaat voor het bereiden van organische seleniumcapsules met een werking tegen kankercellen volgens conclusie 1, met het kenmerk dat het warmteisolatievat (7) vastgemaakt is aan de buitenwand van het mengvat (6), en een verwarmingskamer wordt gevormd tussen het mengvat (6) en het warmteisolatievat (7), waarbij het deksel (8) vastgemaakt is aan de bovenkant van het mengvat (6) en het isolatievat (7), waarbij de buitenwand van het deksel (8) door een veelheid aan aanvoerbuizen (13) vastgemaakt is.

3. Een apparaat voor het bereiden van organische seleniumcapsules met een werking tegen kankercellen volgens conclusie 1, met het kenmerk dat de luchtuitlaatuiteinden van de gastransmissiebuis (12) door het deksel (8) heen vastgemaakt zijn en zich uitstrekken tot een verwarmingskamer tussen het mengvat (6) en het warmteisolatievat (7), en waarbij de binnenkant van de verwarmingskamer is voorzien van een spiraalvormige verwarmingsbuis (9).

-o-o-o-

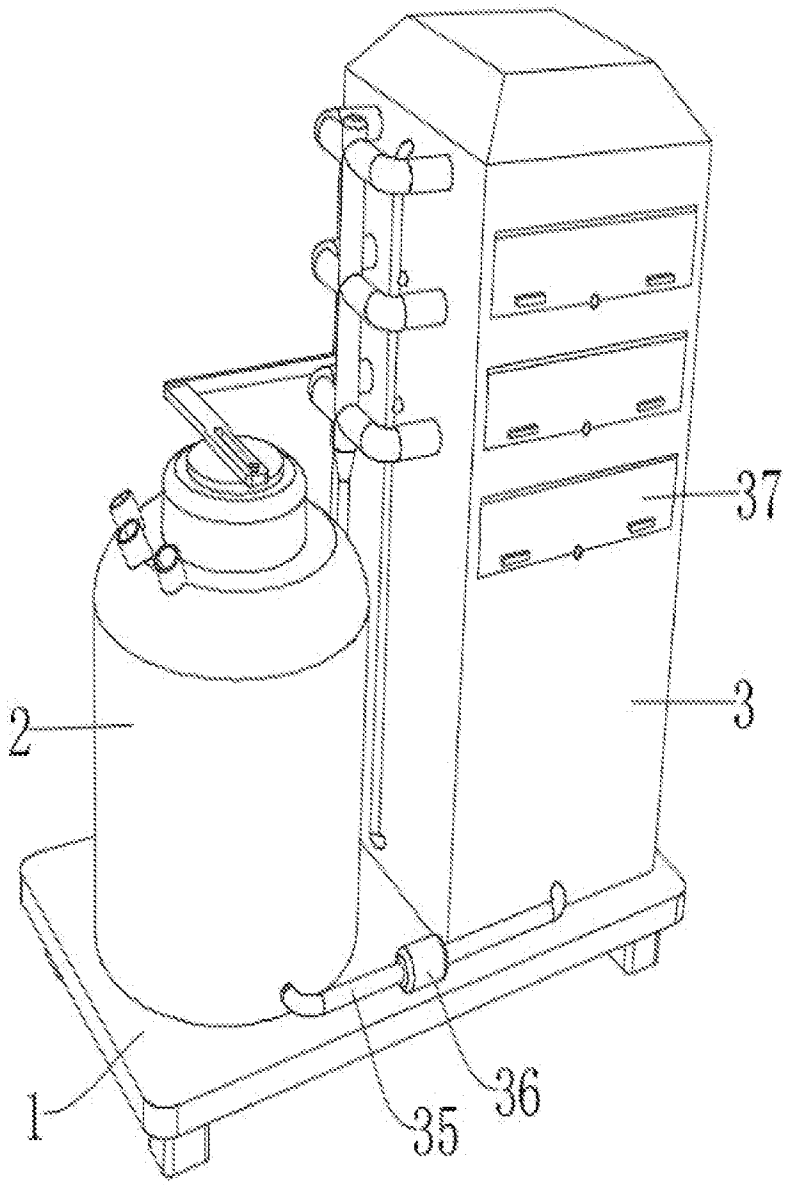

Drawing 1

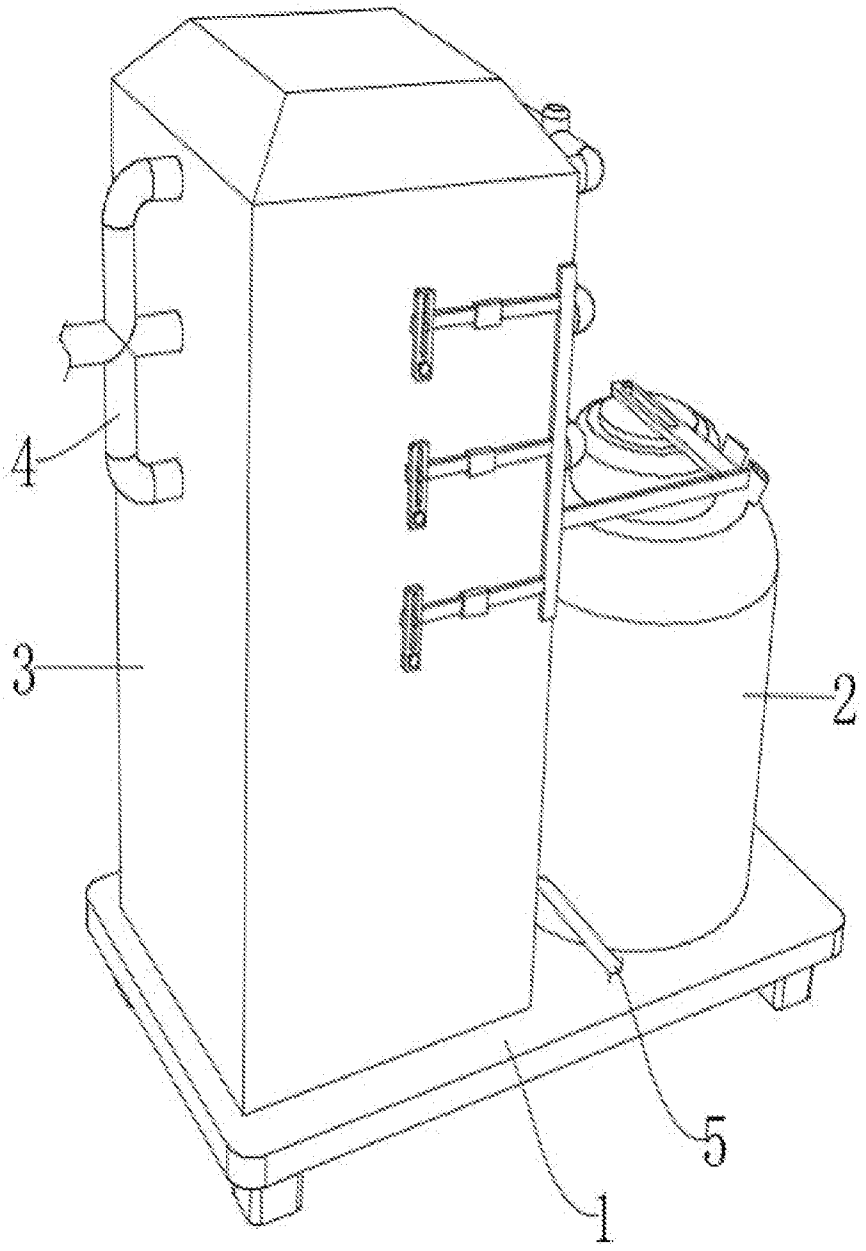

Drawing 2

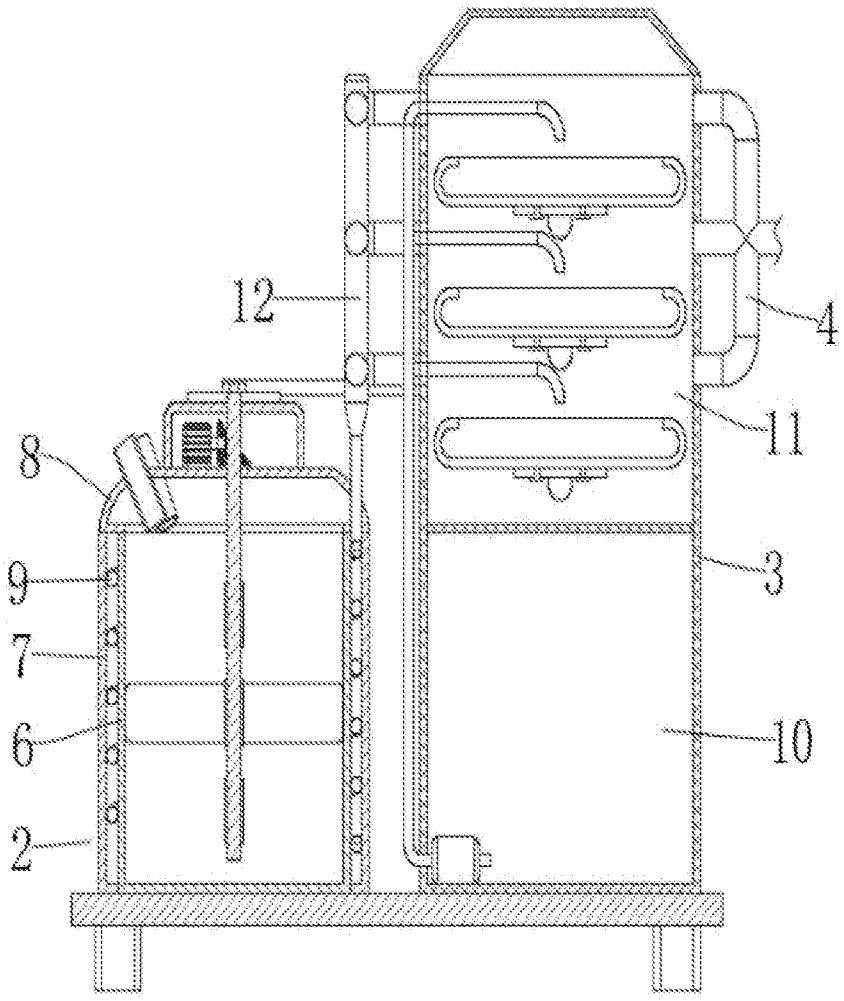

Drawing 3

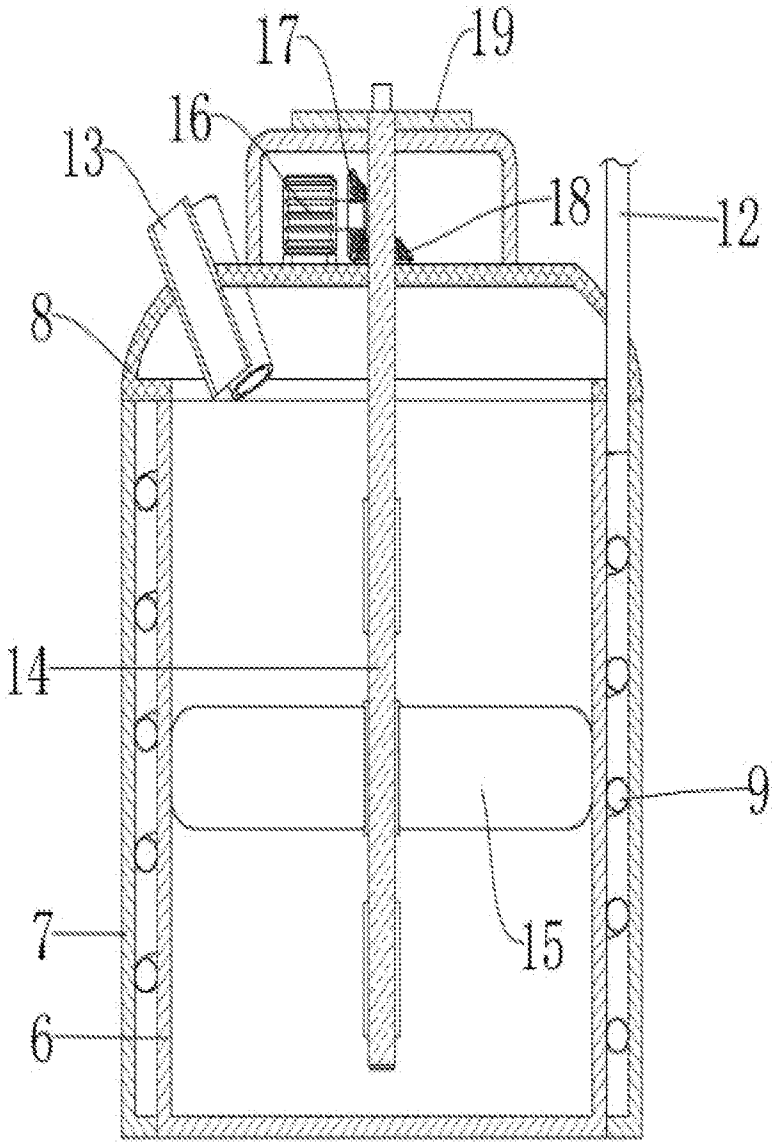

Drawing 4

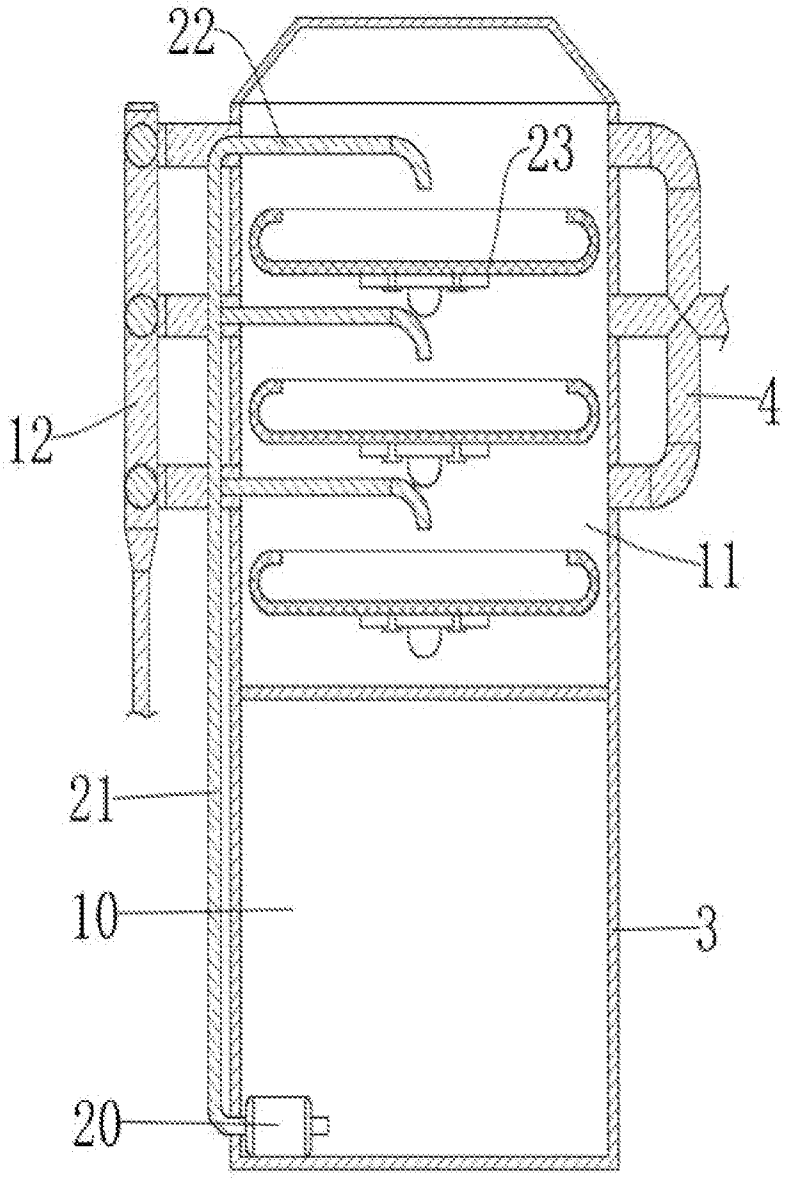

Drawing 5

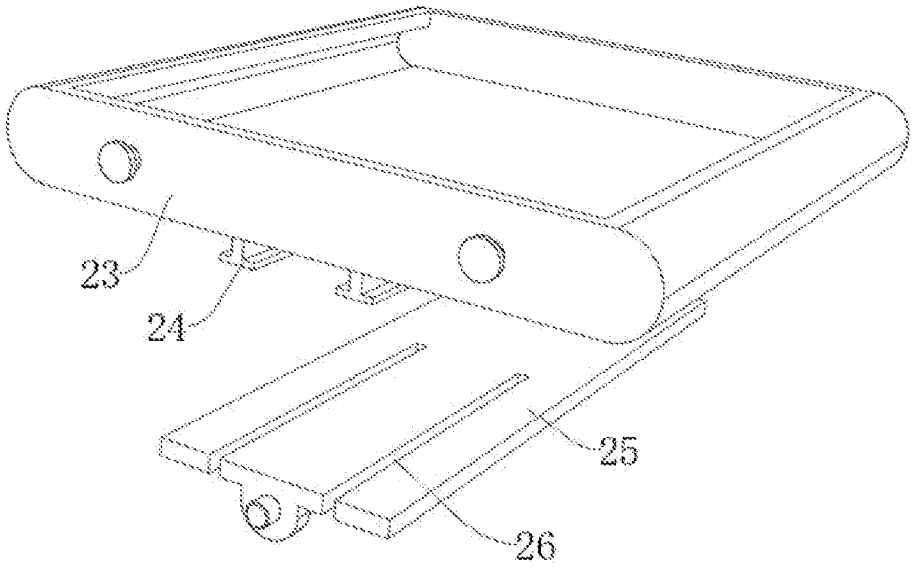

Drawing 6

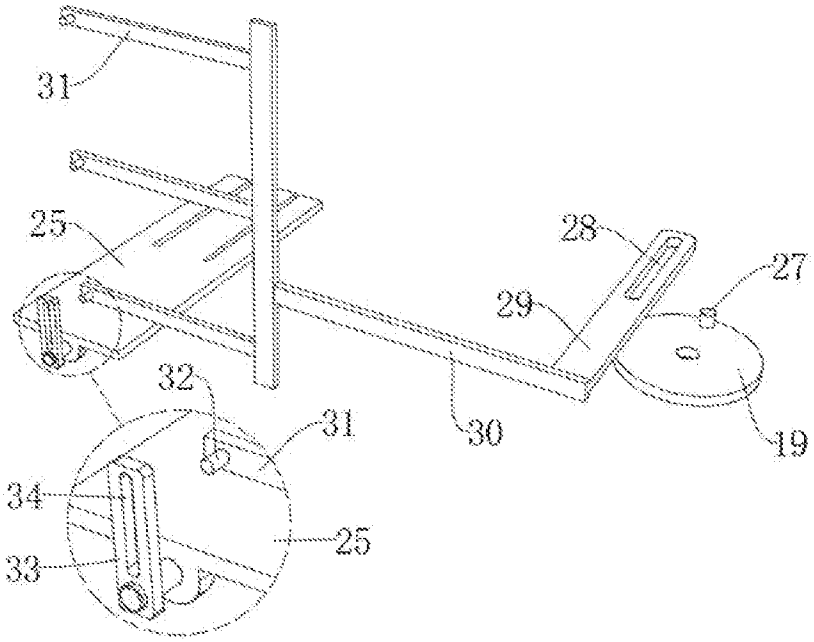

Drawing 7