Aug. 21, 1928. 1,681,286

W. H. FASSHAUER

LINTEL

Filed June 8, 1921

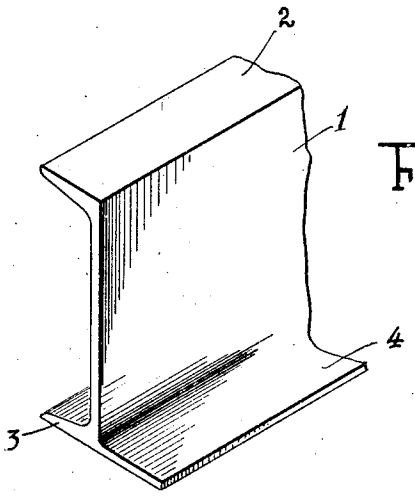

FIG. 1.

FIG. 2.

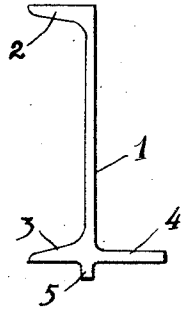

FIG. 3.

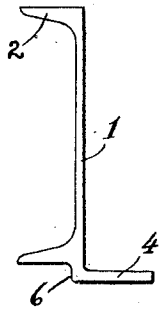

FIG. 4.

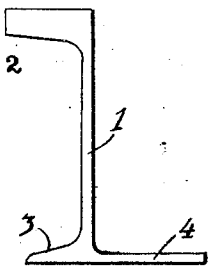

FIG. 5.

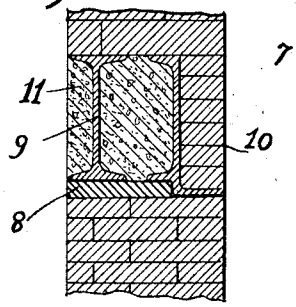

FIG. 6.

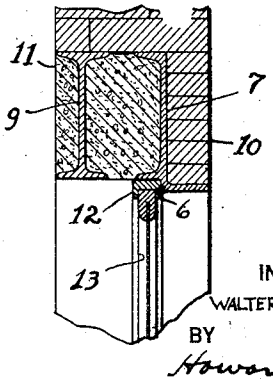

INVENTOR
WALTER H. FASSHAUER
BY
Howard W. Dix
ATTORNEY

Patented Aug. 21, 1928. 1,681,286

UNITED STATES PATENT OFFICE.

WALTER H. FASSHAUER, OF PHILADELPHIA, PENNSYLVANIA.

LINTEL.

Application filed June 8, 1921. Serial No. 475,937.

This invention relates to metal beam supports, and more particularly it relates to a beam of a predetermined design capable of a particular and definite use in building constructions.

One of the objects of this invention is to provide a unit metal beam having a portion thereof designed to support a main load and another portion designed to support another part of the load in a particular manner.

Another object is to provide a unit beam, which has a special use as a lintel for door and window openings in building structures, and which has an integral portion thereof of proper size and contour to support facing materials so that they are received on the integral portion, without being trimmed, in a manner to have the material conform to the building contour.

Other objects of the invention will be apparent from the following description.

In building construction and especially in the wooden or brick type construction, it is desirable to employ metal beams as lintels for the door and window openings, as the other types of beams sag or bend thereby permitting the walls to crack and split open thus giving entrance to the weather elements. Heretofore metal beams have not been employed for this purpose to an extent commensurate with their desirability as they have only been constructed with a view of obtaining sufficient strength. Another reason for not employing the metal beams of prior construction is that they have not been formed so they will support a facing material. These objections have been overcome by the present invention which is directed to a novel beam construction which incorporates certain desirable practical features as well as being of proper strength.

In the accompanying drawings which form a part of this specification, there is illustrated a selected embodiment of this invention wherein,

Fig. 1 is a view in perspective of a portion of a beam of the novel construction.

Figs. 2, 3 and 4 are sectional views of modified forms of the beam.

Fig. 5 is a sectional view of a wall construction showing the selected beam supported by the building wall, and

Fig. 6 is a sectional view of the beam construction in Fig. 5 taken between the edges of a window opening and showing a portion of a window sash in position.

Referring to the drawings and particularly to Fig. 1, a beam of the new construction is illustrated as being a unit member having a web portion 1, flanges 2 and 3 integral with the web and extending therefrom on the same side, and a third flange 4 also integral with the web and extending from the opposite side of the web. In this preferred construction the beam is formed so that the main or direct load is carried by the portion of the beam comprising the web and the flanges 2 and 3, while the flange 4 supports another and much smaller load which is the facing material. However it is to be understood that the flange 4 may be formed to materially increase the strength of the beam as well as performing its special function of supporting its load in a predetermined manner. Usually the beam is rolled from a steel ingot or bar.

This beam has, among its several uses, one particular and specific use wherein it meets a need which has been present for a considerable length of time, and which has not been fulfilled by an article meeting the functional requirements as well as being of sufficient strength. This new type of beam is readily manufactured at a cost substantially less than other beams which might be constructed to meet the need. This specific and particular use is that of a lintel in building construction wherein the flange portion 4 is particularly adapted to readily support the building or facing material covering the beam to have the material align with the contour of the building and to have this material placed in proper position without being cut or trimmed or required to be specifically formed to fit a particular contour of a beam.

In the old building construction, the common I-beam has been employed as a lintel, but in such instances the external face of the beam has been left exposed to the weather thereby making an unsightly building contour, or other and special materials have been employed to cover the exposed face of the I beam. In the last instance material other than the main construction material have been employed to cover the beam and to make the building contour even. For instance when the exterior surface of a building is of brick, it would be necessary to use a concrete or cement filling for the face of the I-beam, as the brick would not be supported on the rounded flanges of such a beam nor would it be supported in line with the

building contour in the event that it could be supported on one of the I-beam flanges.

In the specific use of the beam illustrated in Fig. 1, as a lintel for door or window openings, the flange 2 co-operating with web 1 and flange 3 supports the building material, and the flange 4 supports the facing material in line with the building contour. This flange 4 is preferably formed to be of substantial uniform thickness, and to have its upper surface perpendicular to the web of the beam. In addition the width of the flange is such that it readily receives a brick without requiring the same to be trimmed or specially fitted to the flange. A beam of this form when specifically employed as a lintel, permits the facing material to be quickly placed in position on the flange, and in line with the exterior surface of the building contour. It is to be understood that the flange 4 may be of any desired design which will allow the facing material to be easily and quickly placed in position and held in line with the building contour.

Certain modifications may be made in beams which include the foregoing advantages, and reference is made to Figs. 2, 3 and 4 showing some of the modifications. In Fig. 2 there is illustrated a beam having a tongue 5 which acts as an abutment for a door frame or a window sash. This tongue also functions as a stop to prevent the weather elements from passing directly between the base of the beam and the window sash. In Fig. 3 a form of beam is shown wherein the flange 4 is located in a plane below that of the plane in which flange 3 lies. When the flange 4 is offset, a face 6 functions as an abutment for a door frame or window sash. The flange in offset position also functions to prevent the weather elements from passing to the interior of the building construction in the same manner as tongue 5. It is to be understood that modifications of the tongue 5 and of the base 6 which act as abutments may be made but that such modifications should give irregular contour to the under side of the base of the beam and which modifications are so formed as to receive a construction article in a manner to maintain this article in desired position and to assist in preventing the passage of weather elements between the article and the building construction. There is illustrated in Fig. 4 a beam which takes advantage of the strength of flange 4 to increase the total strength of the beam while the top surface of this flange is still maintained substantially perpendicular to the web in order to properly support the facing material. Such a beam has its strength balanced by increasing the size of flange 2.

Specific application of the improved beam to a brick building structure is illustrated in Figs. 5 and 6. In Fig. 5 there is shown a sectional view of a brick wall showing the ends of an I-beam and my improved beam at their points of support. One form of beam embodying this invention is shown at 7 with the flange 4 resting on the brick work and the flange 3 on the usual plate 8 which rests on the top of the brick. The particular showing illustrates a thick wall and consequently an additional beam to assist in carrying the load is shown in the form of an I beam 9. The bricks supported by the top flanges of the beam are preferably positioned as shown so that the weight of the building material above will be supported by the main portions of the beams. The main function of flange 4 is now readily appreciated by referring to Fig. 5 where it is clearly shown that the width of the flange is substantially that of the width of a brick and therefore the brick 10 for facing the beam are easily placed in position and are held so the centerline of this facing material is parallel to a vertical plane passing through the web of beam 7. By having the top surface of flange 4 substantially perpendicular to the web, the brick employed as the facing material are placed in position without being specially trimmed and they conform to the contour of the building outer surface. The space between the beams and other spaces which are later covered by wall paper or the like, may be filled with concrete or like material.

Fig. 6 shows in section the construction over a window opening and illustrates the particular use of the beam as a lintel which supports the super structure, the facing material, and receives a window frame 12 against face 6. A portion of a window sash 13 is shown in position co-operating with the frame 12. With this design of beam for use as a lintel it is to be noted that rain water in passing down the facing material will not pass to the interior of the window frame as it will drop from the lower side of flange 4 or will pass over the external surface of frame 12 and down on to the window glass. In this connection it is also to be noted that dirt and dust will not be blown to the inner side of the building or window as the window frame sets snugly against the lintel.

While the preferred type of beam has been described for a particular use, it is to be understood that it may be employed for other uses as for example, a duplicate beam may be placed at the inner edge of the wall with the flange 4 extending to the interior of the building so that it may be employed as a support for the ends of girders.

Other uses and modifications may suggest themselves, but they are considered as being

within the scope of this invention as outlined by the following claims.

What is claimed is:

1. An article of manufacture being a beam integrally formed and having two strengthening flanges and a third flange, one of said strengthening flanges being at the top of said beam and the other two flanges being at the bottom thereof, said beam having the under side of its base constructed of irregular contour between the edges of the two lower flanges to form a holding means for receiving and positioning another article of building construction.

2. An article of manufacture being an integrally formed beam having a web portion and two flanges extending from one side of the web portion and having a third flange extending from the opposite side of said web portion from a point below the center of gravity of said beam, said third flange having a substantially flat top surface for receiving and holding a material in engagement with said web portion in a position substantially parallel to said web portion and extending to the highest point of said web portion, said beam being provided on its under surface and between the edges thereof, an abutment forming an irregularity in the contour of the under side of said base and adapted to receive thereagainst another article of building construction for positioning said article.

3. An article of manufacture being a beam adapted to be placed over an opening in a building to support building material above said opening, said beam comprising a web portion with two flanges integral therewith and extending from the same side of said web portion and a third flange also integral with said web portion and extending from the other side thereof, said third flange having a substantially level top surface for supporting some building material along one side of said web portion to thereby obscure the beam from view, said beam having an offset abutment formed in the base thereof substantially in line with the web portion to receive thereagainst another article of building construction.

4. An article of manufacture being a beam adapted to be placed over an opening in a building to support the building material above said opening, said beam being composed of a web portion, two flanges of varying thicknesses formed integrally with said web portion and extending from the same side of that portion, and a third flange also formed integrally with said web portion and extending from the opposite side thereof and being so constructed as to support a small amount of building material along the side of said web portion in alignment with the building material above said beam, said third flange also being constructed to have its under side positioned below the under side of the lower flange of said two flanges to thereby form an abutment for purposes of positioning window sash, said abutment and said sash adapted to cooperate to prevent the passing of dirt and the weather elements therebetween.

5. An article of manufacture being a beam adapted to be positioned over an opening in building construction, said beam consisting of a web portion, two flanges extending from one side of said web portion, and a third flange extending from the opposite side of said web portion, said third flange being located a greater distance from the center of gravity of said beam than the lowermost of said two flanges.

In testimony whereof, I have hereunto subscribed my name this 6th day of June, 1921.

WALTER H. FASSHAUER.