P/00/008b 12/11/91
Section 29 (1)
Regulation 3.1 (2)

676734

AUSTRALIA

Patents Act 1990

NOTICE OF ENTITLEMENT

(To be filed before acceptance)

We, MÖLNLYCKE AB of, S-40503 GOTEBORG, SWEDEN being the applicant in respect of Application No. 67636/94 state the following:-

The Person nominated for the grant of the patent has entitlement from the actual inventors by assignment.

The person nominated for the grant of the patent is the applicant of the application listed in the declaration under Article 8 of the PCT.

The basic application listed in the declaration made under Article 8 of the PCT is the first application made in a Convention country in respect of the invention.

MÖLNLYCKE AB

By our Patent Attorneys,
WATERMARK PATENT & TRADEMARK ATTORNEYS

.....

Lynn P. Stafford

Registered Patent Attorney

15 January 1997

.....

AU9467636

(12) PATENT ABRIDGMENT (11) Document No. AU-B-67636/94
(19) AUSTRALIAN PATENT OFFICE (10) Acceptance No. 676734

(54) Title
WAIST BELT FOR ABSORBENT GARMENT

International Patent Classification(s)
(51)[5] A61F 013/68 A61F 013/62 A61F 013/64

(21) Application No. : 67636/94 (22) Application Date : 09.05.94

(87) PCT Publication Number : WO94/26222

(30) Priority Data

(31) Number (32) Date (33) Country
9301630 12.05.93 SE SWEDEN

(43) Publication Date : 12.12.94

(44) Publication Date of Accepted Application : 20.03.97

(71) Applicant(s)
MOLNLYCKE AB

(72) Inventor(s)
BJORN LARSSON; OLLE CARLBARK; PETER RONNBERG

(74) Attorney or Agent
WATERMARK PATENT & TRADEMARK ATTORNEYS , Locked Bag 5, HAWTHORN VIC 3122

(56) Prior Art Documents
WO 91/08725
EP 336578

(57)

The flexure-resistance of a material sample is measured by its peak bending stiffness. Thus as defined in claim 1 and as disclosed in the sample testing method of EP-A-0 336 578, said testing equipment, procedure and calculations hereby being incorporated by reference, the peak bending stiffness is determined by a test modelled after the ASTM D 4032-82 CIRCULAR BEND PROCEDURE, the procedure being considerably modified and performed as indicated in EP-A-0 336 578.

CLAIM

1. Garment (1) comprising an absorbent section (2) and a waist belt (3) attached directly or indirectly thereto, said waist belt having two belt portions (7, 8) extending on either side of said absorbent section for securing to each other around a wearer of the garment, c h a r a c t e r i z e d in that said waist belt (3) has a stiffness of between 25 g and 90 g as measured by the modified version of test ASTM D 4032-82 CIRCULAR BEND PROCEDURE.

OPI DATE 12/12/94 APPLN. ID 67636/94
AOJP DATE 19/01/95 PCT NUMBER PCT/SE94/00426

AU9467636

I

(51) International Patent Classification 5 :
A61F 13/56 // 13/62, 13/66

A1

(11) International Publication Number: WO 94/26222

(43) International Publication Date: 24 November 1994 (24.11.94)

(21) International Application Number: PCT/SE94/00426

(22) International Filing Date: 9 May 1994 (09.05.94)

(30) Priority Data:
9301630-1 12 May 1993 (12.05.93) SE

(71) Applicant *(for all designated States except US)*: MÖLNLYCKE AB [SE/SE]; S-405 03 Göteborg (SE).

(72) Inventors; and
(75) Inventors/Applicants *(for US only)*: LARSSON, Björn [SE/SE]; Örsviksvägen 1, S-427 50 Billdal (SE). CARLBARK, Olle [SE/SE]; Stomvägen 2B, S-430 50 Kållered (SE). RÖNNBERG, Peter [SE/SE]; Rävekärrsgatan 265, S-431 33 Mölndal (SE).

(74) Agents: GRAUDUMS, Valdis et al.; Albihn West AB, Box 142, S-401 22 Göteborg (SE).

(81) Designated States: AT, AU, BB, BG, BR, BY, CA, CH, CN, CZ, DE, DK, ES, FI, GB, GE, HU, JP, KG, KP, KR, KZ, LK, LU, LV, MD, MG, MN, MW, NL, NO, NZ, PL, PT, RO, RU, SD, SE, SI, SK, TJ, TT, UA, US, UZ, VN, European patent (AT, BE, CH, DE, DK, ES, FR, GB, GR, IE, IT, LU, MC, NL, PT, SE), OAPI patent (BF, BJ, CF, CG, CI, CM, GA, GN, ML, MR, NE, SN, TD, TG).

Published
With international search report.

676734

(54) Title: WAIST BELT FOR ABSORBENT GARMENT

(57) Abstract

The invention concerns a garment (1) comprising an absorbent section (2) and a waist belt (3) attached directly or indirectly thereto. The waist belt has two belt portions (7, 8) extending on either side of said absorbent section for securing to each other around a wearer of the garment. The particular handling characteristics of the belt parts of the waist belt (3) are significantly improved by manufacturing a belt stiffness of between 25g and 90g as measured by the modified version of test ASTM D 4032-82 CIRCULAR BEND PROCEDURE.

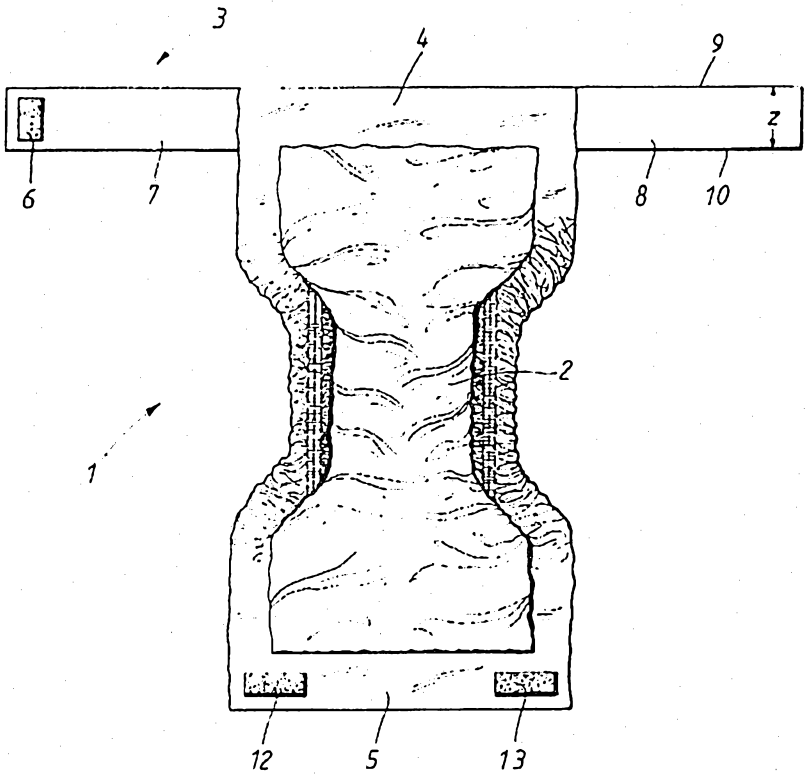

Title:
WAIST BELT FOR ABSORBENT GARMENT

Field of the Invention

The invention relates to a garment comprising an absorbent section and a waist belt attached directly or indirectly thereto, said waist belt having two belt portions extending on either side of said absorbent section for securing to each other around a wearer of the garment, as defined in the preamble of claim 1.

Background to the invention

Absorbent garments of the above mentioned type are well known in the art.

The type of garment in question has a belt attached integrally with the absorbent garment portion and requires that, after fastening the belt around the waist with the attached end at the back of the wearer, the end not attached to the belt section should be passed through the wearer's legs and attached by some means of releasable attachment to the belt at the front. The means of releasable attachment could be a hook and loop (also called touch and close) type fastening means, for instance such as sold under the name "VELCRO".

Published application WO-A-91/08725 discloses an example of such a garment in one embodiment.

One of the problems recognised with such garments is the problems of handling the belt portions which project from

either side of the absorbent portion of the integrated garment in such a way so as to be able to quickly and accurately take hold of the belt portions and fasten them together. However the belt material still needs to be cheap since it is integrated with a garment which together with the belt form a disposable unit.

Where the problem of incontinence is involved, it will be appreciated that persons suffering from this problem are often old and have physical handicaps of various types. As a consequence, they have more difficulty fastening the belt by themselves and often require the assistance of personnel for fitting the garments.

Thus there is a need to find for a solution which allows easy and correct fitting of the absorbent garment, particularly in the case of handicapped persons.

Summary of the Invention

The aforementioned problems of handling are solved by the features of the belt according to claim 1.

The resultant belt of the garment is one which is not prone to excessive wrinkling which could be painful for the wearer and not too stiff which causes problems of cutting and abrasion itself. Additionally, a garment is achieved with a belt which can be made cheaply and is particularly suitable for adult incontinence applications.

Preferred features of the belt are defined in the dependent claims.

The flexure-resistance of a material sample is measured by its peak bending stiffness. Thus as defined in claim 1 and as disclosed in the sample testing method of EP-A-0 336

578, said testing equipment, procedure and calculations hereby being incorporated by reference, the peak bending stiffness is determined by a test modelled after the ASTM D 4032-82 CIRCULAR BEND PROCEDURE, the procedure being considerably modified and performed as indicated in EP-A-0 336 578.

The CIRCULAR BEND PROCEDURE is a simultaneous multi-directional deformation of a material in which one face of a specimen becomes concave and the other face becomes convex. The CIRCULAR BEND PROCEDURE gives a force value related to flexure-resistance, simultaneously averaging stiffness in all directions.

The tests were carried out on the belt of the present application using the apparatus from EP-A-0 336 578 necessary for the CIRCULAR BEND PROCEDURE which is a modified Circular Bend Stiffness Tester, having the following parts:

A smooth-polished steel plate platform which is 102.0 x 102.0 x 6.35 millimetres having an 18.75 millimetre diameter orifice. The lap edge of the orifice should be at a 45 degree angle to a depth of 4.75 millimetres.

A plunger having an overall length of 72.2 millimetres, a diameter of 6.25 millimetres, a ball nose having a radius of 2.97 millimetres and a needle-point extending 0.88 millimetre therefrom having a 0.33 millimetre base diameter and a point having a radius of less than 0,5 millimetre, the plunger being mounted concentrically with the orifice and having equal clearance on all sides. It should be noted that the needle point is merely to prevent lateral movement of the test specimen during testing. Therefore, if the needle-point significantly adversely affects the test specimen (for example by puncturing an inflatable structure), than the needle-point should not be used. The bottom of the plunger should be set well above the top of the

orifice plate. From this position, the downward stroke of the ball nose is to the exact bottom of the plate orifice. A force-measurement gauge and more specifically an Instron inverted compression load cell. The load cell has a load range of from 0.0 to 2000.0 grams. An actuator, and more specifically the Instron Model No. 1122, having an inverted compression load cell. The Instron 1122 is made by the Instron Engineering Corporation, Canton, Massachusetts.

It should be noted that, whilst the term "absorbent garment" has been used particularly in conjunction with incontinence, and particularly adult incontinence, the invention is not limited to this particular use or any particular size or type of absorbent garment implied thereby and it is clear for the skilled man that such belts could be used with baby's or children's nappies (diapers) for example, merely by adapting the dimensions appropriately.

Brief Description of the Drawings

The invention will now be explained in more detail with reference to certain non-limiting embodiments and with reference to the accompanying drawings, in which

Fig.1 depicts a garment including a belt according to the invention, and

Fig.2 shows various attachment means used in accordance with fastening the belt of the present invention.

Detailed description of preferred embodiments

Fig. 1 shows a garment generally denoted 1 which consists of an absorbent portion 2 and a belt portion generally denoted 3.

The belt could be either one continuous belt 3 attached to the absorbent portion 2 at one end 4 thereof or could be two separate belt portions 7 and 8 each attached to a respective side of the end 4 (or 5). The manner of attachment per se is of no importance for the present application.

If it is desirable to impart elasticity to a belt made of two separate belt portions, it is conceivable that the end 4 of the absorbent portion 2 be elasticized.

The general appearance of the garment in the figures is known per se and thus no detailed explanation of all elements will be entered into. At one end of one part 7 of the belt 3 there is provided a flexible strip 6 of hook elements, of the hook and loop type of fastening means, which can either be secured to the belt part 8 (on the side not shown) or to a loop strip arranged on the belt part 8. Additional advantages, as explained below, will be obtained by particular dimensions and orientation of this strip. Whilst the belt is preferably substantially rectangular in shape comprising two laterally spaced longitudinal edges 9 and 10, between which the strip 6 will be attached, other shapes are conceivable. However, with a rectangular belt, the width of the belt should lie between 70 mm and 160 mm in adult incontinence applications.

Using such a belt, it is now possible to achieve good handling characteristics of the belt parts 7 and 8 even with the use of non-woven materials by selecting the range of stiffness according to the ASTM D 4032 modified test to lie between 25 g and 90 g. Below 25 g, the problem of wrinkling arises and this, as previously explained, is undesirable. Thus a free zone part of the belt (e.g. in the middle of one belt part 7) stiffness will lie in the stated range.

In particular according to the invention, the preferred range of stiffness lies between 30 g and 55 g and the best handling is obtained between 35 g and 50 g. Thus, in particular with the range of belts used for adult incontinence applications, the inventors have succeeded in achieving the optimum handling characteristics whilst still preventing wrinkling or stiff regions which cause discomfort.

A non-woven material is preferably used for either one or both sides of the belt, said non-woven material being of a type to which the hook elements of the strip 6 can releasable attach. By use of a non-woven material for the releasable attachment surface of the belt it is possible to achieve particularly favourable peel strength and shear strength combinations, which give a peel strength down to 0.1 - 2.0 Ncm^{-1}, preferably as low as 0.2 - 0.8 Ncm^{-1}, and a shear strength greater than 1 Ncm^{-2}, though preferably greater than 15 Ncm^{-2} and normally greater than 20 Ncm^{-2}. The use of non-woven material is of course advantageous since it will be cheaper than woven material and thus more suitable to disposable garments. Such values are also valid for the attachment of strips 12 and 13 on end 5 of the garment which are attached to the non-shown side of the belt after fastening of the belt and passing through the wearer's legs.

The optimal handling characteristics which have now been achieved can of course thus be maintained even when using an inner side material for the belt part which is of absorbent material, preferably of non-woven sort, without increasing the cost to greater than prior art solutions using non-lined belts.

Since comfort of the wearer is a particularly important consideration in this field and in particular to fitting of

the belt, it has been shown advantageous to adopt a particular placement of the hook element strips for fastening the belt together. Thus in order to reduce, to a great extent the possibility of the hook element strips contacting the wearer's waist due to incorrect fitting of the belt, or for the case where the waist of the user increases dimension, the hook element strip or strips are made of such a length and width and are positioned with such an orientation so as to avoid this.

As can be seen from Fig. 2, showing three possible strip embodiments 15, 16 and 17, the distance between the outer edges of the strip(s) is spaced at a distance from each edge 9, 10 of the belt. In this way, when the belt is fitted, if slightly angled or not correctly overlapped, the hook elements will not project beyond the edge of the belt and thus will not contact the wearer's body.

As can be seen, the strips are generally elongate, or in the case of a series of strips 16 as in Fig. 2(b), the series of strips is elongate. Preferably a ratio of greater than 2:1 elongation is used and even more preferably an elongation ration of over 3:1. Thus to achieve the aforementioned advantages it is preferable to lay the strips with their larger dimension across the belt width, as depicted, and to give the strips a dimension such that the larger dimension has a length of between 25 % and 75 % of the width (z) of the main area of the belt. By width of the belt, is hereby meant the width of the belt at the zone where the strip(s) 15, 16 and 17 will attach. Thus in the embodiment of Fig. 2(c), although the strip 17 extends entirely across the reduced portion of the belt, the strip still lies within the stated range. In particular it has been found particularly advantageous to use a strip with a length which is less than 60% or even more preferable less than 50%. Due to the shear strength which can be achieved

by the use of non-woven materials as the belt attachment surface, it is also easy to acquire adequate shear strength with only minimal attachment area.

Additionally, with the choice of belt stiffness as claimed it is further also possible to avoid wrinkling occurring from attachment strips even when using smaller strip dimensions.

Whilst particular embodiments of the invention have been described above, it is to be understood that these are in no way limiting for the scope of the invention which is defined by the claims appended hereto.

Additionally, it will be understood by the skilled man that, whilst not preferred, the belt stiffness range can be used for non-integral belt applications also, for example where an absorbent chassis is fitted to the belt, by releasably attachable means.

Claims

1. Garment (1) comprising an absorbent section (2) and a waist belt (3) attached directly or indirectly thereto, said waist belt having two belt portions (7, 8) extending on either side of said absorbent section for securing to each other around a wearer of the garment, c h a r a c t e r i z e d in that said waist belt (3) has a stiffness of between 25 g and 90 g as measured by the modified version of test ASTM D 4032-82 CIRCULAR BEND PROCEDURE.

2. Garment according to claim 1, c h a r a c t e r i z e d in that said waist belt (3) has a width of between 70 mm and 160 mm.

3. Garment according to claims 1 or 2, c h a r a c t e r i z e d in tnat said waist belt consists on at least its outer side, when fitted, of a non-woven material.

4. Garment according to claim 3, c h a r a c t e r i z e d in that said waist belt consists on both sides of a non-woven material.

5. Garment according to claim 4, c h a r a c t e r i z e d in that said waist belt consists of only one non-woven material piece.

6. Garment according to any preceding claim, c h a r a c t e r i z e d in that the stiffness of the waist belt, as measured by the modified version of test ASTM D 4032-82 CIRCULAR BEND PROCEDURE, lies between 30 g and 55 g and most preferably between 35 g and 50 g.

7. Garment according to any preceding claim, c h a r a c t e r i z e d in that the absorbent section (2), at its end (5) remote from the end (4) at which the belt (3) is attached, is provided with hook element strips (12, 13) of a hook and loop type fastener for attachment of said remote end (5) to the waist belt at spaced locations, and in that the connection of said hook element strips to said waist belt has a shear strength of 1 Ncm^{-2} or more, though preferbly greater than 15 Ncm^{-2}, and a peel strength of between 0.1 - 2.0 Ncm^{-1}, preferably 0.2 - 0.8 Ncm^{-1}.

8. Garment according to any preceding claim, c h a r a c t e r i z e d in that one of said two belt portions (7, 8) has a hook element attachment strip attached thereto (6, 15, 16, 17) for securing one belt portion to the other belt portion, said attachment strip being elongate and lying with its larger dimension in the belt width direction whereby said larger dimension has a length of between 25 % and 75 % of the belt width (z).

9. Garment according to any preceding claim, c h a r a c t e r i z e d in that said waist belt (3) is a continuous belt attached to said absorbent section so as to leave two belt portions (7, 8) each extending from a respective side of said absorbent section.

67636/94

1/2

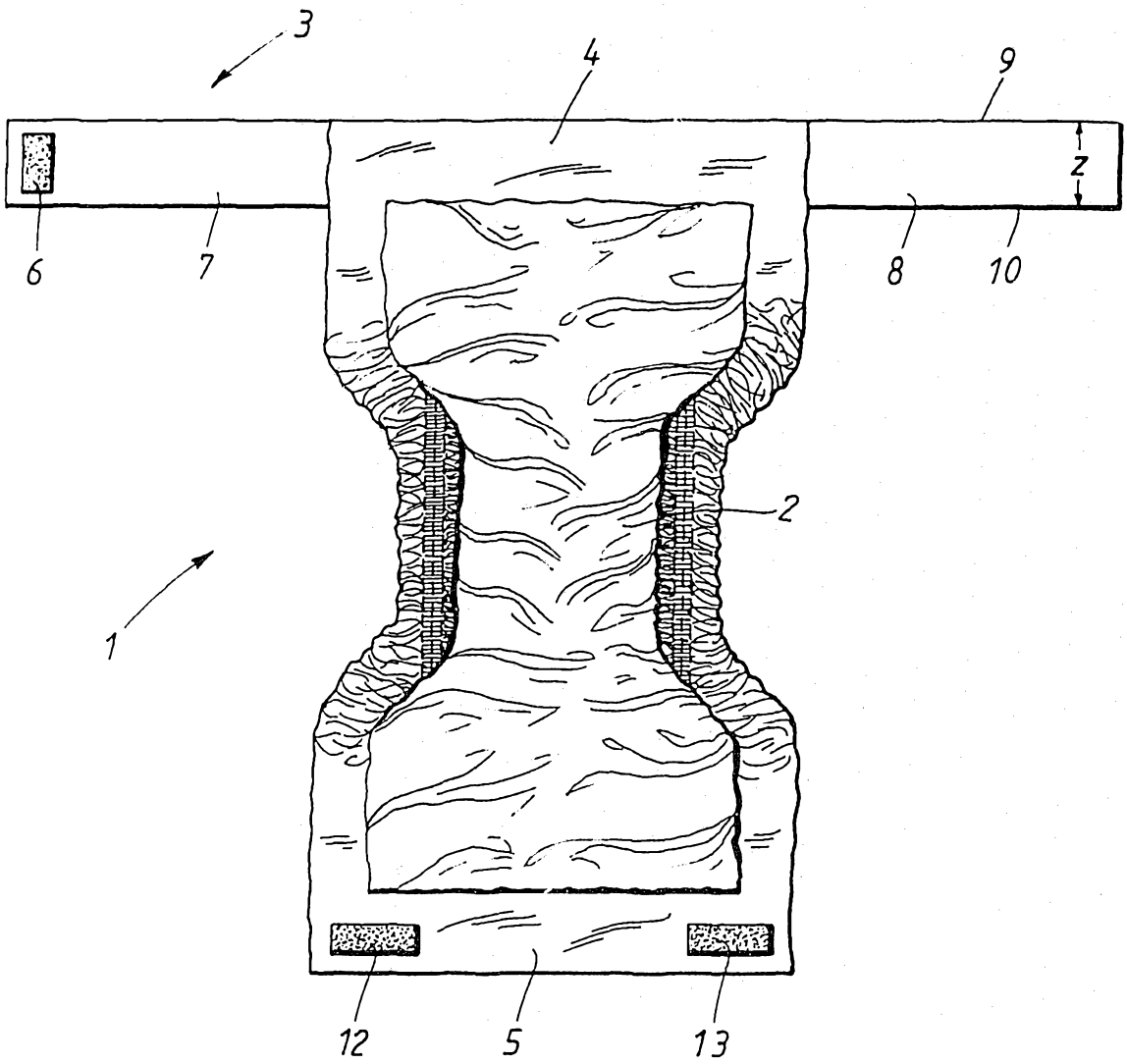

FIG.1

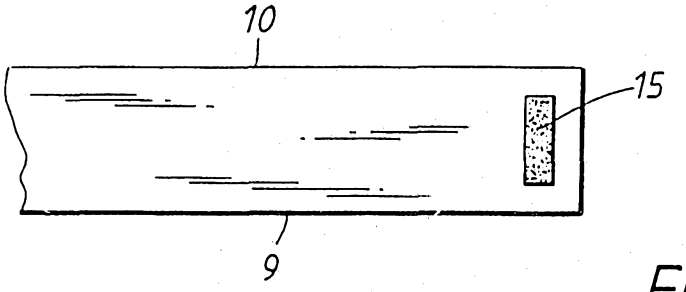

FIG. 2A

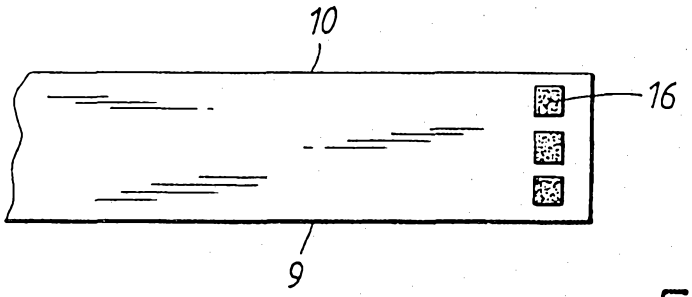

FIG. 2B

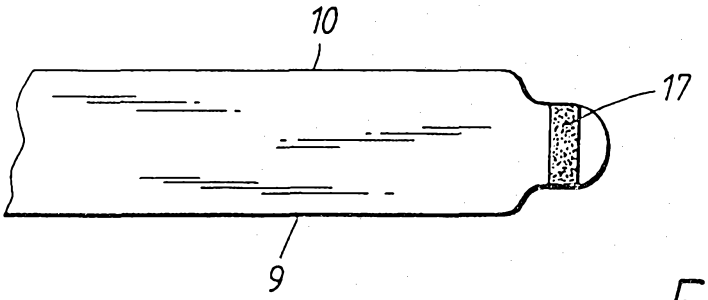

FIG. 2C

INTERNATIONAL SEARCH REPORT

International application No.
PCT/SE 94/00426

A. CLASSIFICATION OF SUBJECT MATTER

IPC5: A61F 13/56 // A 61 F 13/62, A 61 F 13/66
According to International Patent Classification (IPC) or to both national classification and IPC

B. FIELDS SEARCHED

Minimum documentation searched (classification system followed by classification symbols)

IPC5: A61F, A41B

Documentation searched other than minimum documentation to the extent that such documents are included in the fields searched

SE,DK,FI,NO classes as above

Electronic data base consulted during the international search (name of data base and, where practicable, search terms used)

C. DOCUMENTS CONSIDERED TO BE RELEVANT

Category*	Citation of document, with indication, where appropriate, of the relevant passages	Relevant to claim No.
A	WO, A1, 9108725 (THE PROCTER & GAMBLE COMPANY), 27 June 1991 (27.06.91), page 16, line 22; page 17, line 9; page 18, line 19 - line 22	1-9
A	EP, A1, 0336578 (THE PROCTER & GAMBLE COMPANY), 11 October 1989 (11.10.89), page 13, line 40 - page 14, line 13	1-9

☐ Further documents are listed in the continuation of Box C. ☒ See patent family annex.

* Special categories of cited documents:
"A" document defining the general state of the art which is not considered to be of particular relevance
"E" erlier document but published on or after the international filing date
"L" document which may throw doubts on priority claim(s) or which is cited to establish the publication date of another citation or other special reason (as specified)
"O" document referring to an oral disclosure, use, exhibition or other means
"P" document published prior to the international filing date but later than the priority date claimed
"T" later document published after the international filing date or priority date and not in conflict with the application but cited to understand the principle or theory underlying the invention
"X" document of particular relevance: the claimed invention cannot be considered novel or cannot be considered to involve an inventive step when the document is taken alone
"Y" document of particular relevance: the claimed invention cannot be considered to involve an inventive step when the document is combined with one or more other such documents, such combination being obvious to a person skilled in the art
"&" document member of the same patent family

Date of the actual completion of the international search	Date of mailing of the international search report
6 Sept 1994	07 -09- 1994
Name and mailing address of the ISA/ Swedish Patent Office Box 5055, S-102 42 STOCKHOLM Facsimile No. +46 8 666 02 86	Authorized officer Ingrid Falk Telephone No. +46 8 782 25 00

INTERNATIONAL SEARCH REPORT

Information on patent family members

30/07/94

International application No.
PCT/SE 94/00426

Patent document cited in search report	Publication date	Patent family member(s)	Publication date
WO-A1- 9108725	27/06/91	AU-A- 6907291	18/07/91
		CN-A- 1054531	18/09/91
		CN-A- 1054711	25/09/91
		EP-A,A- 0506745	07/10/92
EP-A1- 0336578	11/10/89	AU-B- 629821	15/10/92
		AU-A- 3224089	05/10/89
		CA-A- 1317701	18/05/93
		JP-A- 2011137	16/01/90
		US-A- 4950264	21/08/90
		US-A- 5009653	23/04/91