June 7, 1955 F. LOBENDANK 2,710,239

VERTICALLY ADJUSTABLE LEG STRUCTURE

Filed June 15, 1953 2 Sheets-Sheet 1

FIG. 1.

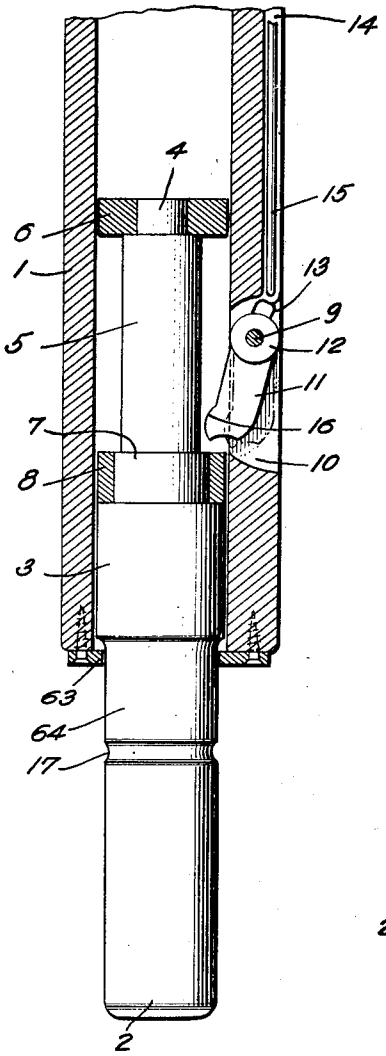

FIG. 2.

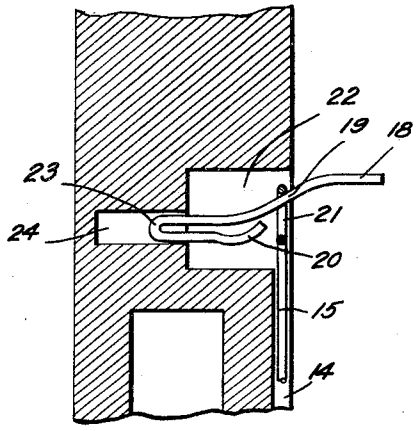

FIG. 4.

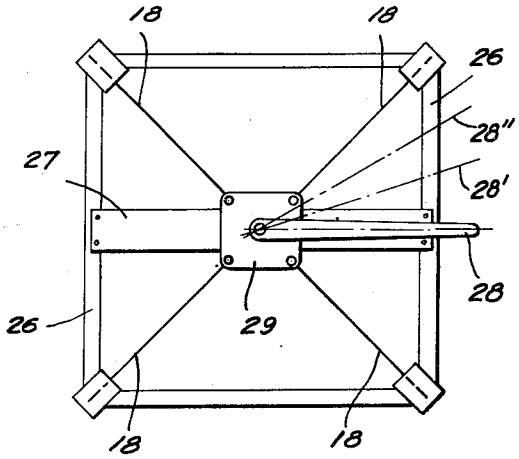

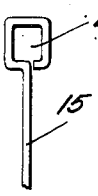

FIG. 3.

INVENTOR

Friedrich Lobendank

BY

ATTORNEY

June 7, 1955 F. LOBENDANK 2,710,239

VERTICALLY ADJUSTABLE LEG STRUCTURE

Filed June 15, 1953 2 Sheets-Sheet 2

FIG. 5.

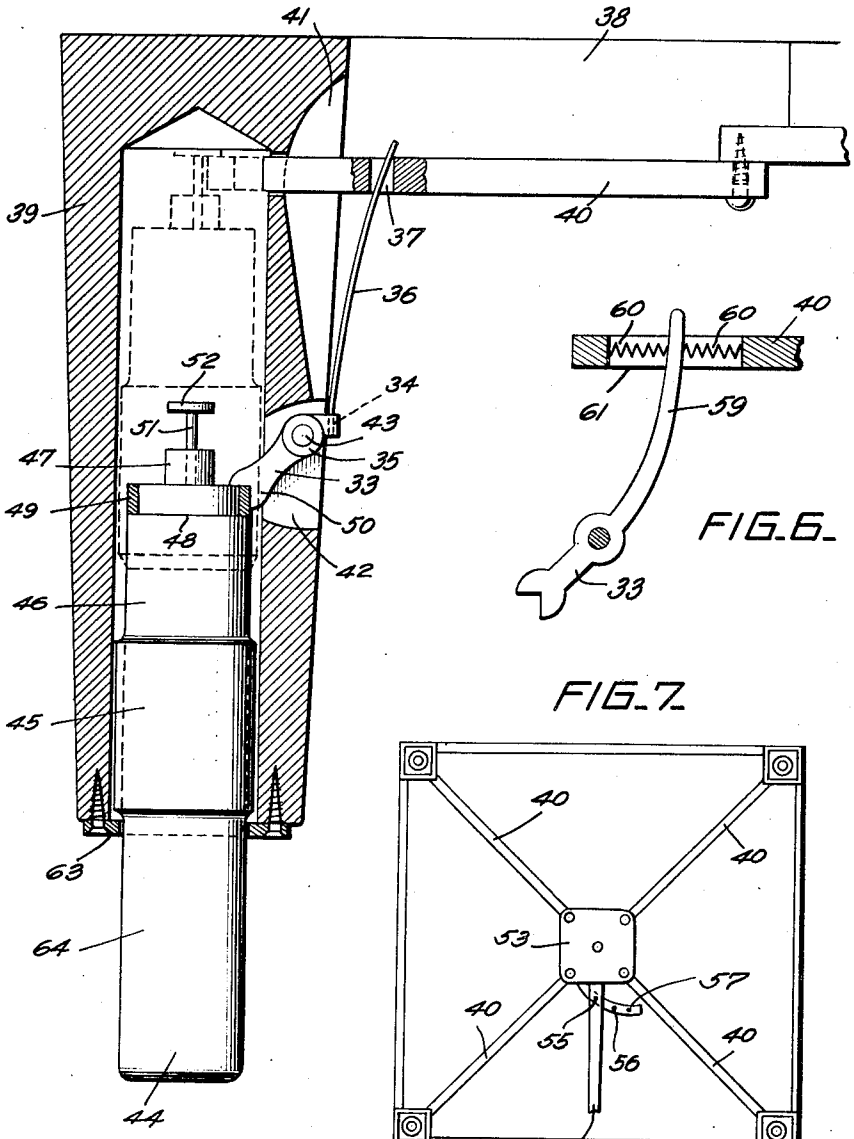

FIG. 6.

FIG. 7.

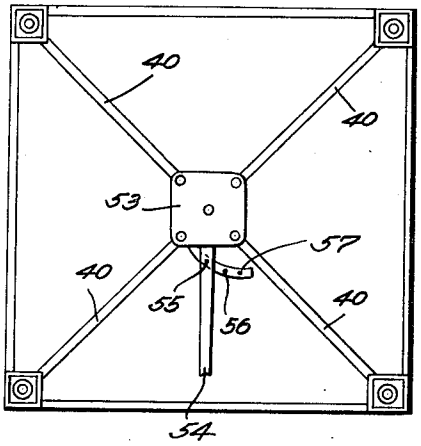

INVENTOR

Friedrich Lobendank

BY

ATTORNEY

United States Patent Office

2,710,239

Patented June 7, 1955

1

2,710,239

VERTICALLY ADJUSTABLE LEG STRUCTURE

Friedrich Lobendank, Bad Aiblich, Germany

Application June 15, 1953, Serial No. 361,776

2 Claims. (Cl. 311—39)

My invention relates to tables, chairs, and other pieces of furniture and more particularly to that type of leg supported pieces of furniture having legs adjustable in their length in order to vary the height of the piece of furniture.

It is an object of my invention to provide a piece of furniture of the type indicated above which may be operated and easily adjusted by one person and which is of a reliable and the simplest possible construction.

The said and other objects of my invention will be more fully understood from the following specification when read together with the accompanying drawing in which two embodiments are illustrated.

In the drawing

Fig. 1 shows an axial section through the lower part of a table leg,

Fig. 2 shows an axial section through the upper part of the table leg shown in Fig. 1,

Fig. 3 shows a front view of the upper part of a member used in my device, and more particularly referred to in the specification,

Fig. 4 shows a view from below of a table fitted with legs shown in Figs. 1 and 2,

Fig. 5 shows a longitudinal section through another embodiment of a table leg, with a control device employing spring-actuated intermediate links,

Fig. 6 shows another embodiment of the spring-actuated intermediate links controlling the locking members as used in my device, and

Fig. 7 shows a view from below of a table fitted with legs shown in Fig. 5.

Figs. 1 and 2 show one of a plurality of tubular legs **1** which are firmly attached to a piece of furniture supported thereby for example to a table as illustrated in Fig. 4. Each leg **1** is provided with an extension **2** which telescopes therefrom and is guided therein by its cylindrical middle portion **3**. This portion continues upwards into a portion **5** of smaller cross section thus leaving a shoulder **7** which may be reinforced by a metallic ring **8**.

Each tubular leg **1** is provided with an aperture **10** and the apertures on the different legs **1** face each other. A locking member **11** is mounted in each of said apertures **10** for an unobstructed pendulous movement therein and in such manner that the locking member **11** in its free hanging vertical position shown in dotted lines in Fig. 1 avoids any contact with the leg extension **2**. This locking member **11** when swung inwardly into the tubular leg **1** cooperates with said shoulder **7**, **8** and secures the extension **2** against upward axial movement in the tubular leg **1**. The locking member **11** is operated that is swung inwardly into the tubular leg **1** against and released from cooperation with the extension **2**, respectively, by any suitable means acting simultaneously on the locking members **11** arranged in all legs **1** attached to the piece of furniture. In the shown embodiment these means comprise a push rod **15** slidably mounted in a groove **14** in each leg **1** above the locking member **11**. Said push rod **15** operates with its lower end against a lug or other projection **13** integral with the locking member **11** and is provided at its upper end with a loop or the like **21** (Figs. 2 and 3) by which said rod **15** is raised from and lowered towards said lug **13**. To this effect the said loop **21** of each push rod **15** is actuated by one end of a switch rod **18** passing therethrough, the other end of which is jointed to a disc **29** which is rotatably mounted on a bridge **27** attached to the underside of the table top **26**. Said disc **29** is actuated by a lever **28** which may be turned from the position shown in full lines, which effects a locking position of the locking member **17**, into the positions schematically indicated by the lines **28'** and **28''** shown in Fig. 4.

2

Each switch rod **18** has near its outer end a curved portion **19** which cooperates with said loop **21** and effects a raising or lowering of the push rod **15** when the switch rod **18** is displaced to the left or to the right, respectively, by actuating the lever **28**. The outer end of each switch rod **18** is bent back as shown in Fig. 2 to enforce the same and is slidably resting in a conforming hole **24** in the leg **1**.

The lower portion **64** of the leg extension **2** is provided with a groove **17** which is engaged by the face **16** of the locking member **11** when the extension **2** is telescoped into the leg **1**. Thus the extension **2** is held within the tubular leg **1**. When the locking member **11** is in inoperative position the extension **2** is prevented from completely dropping out of the tubular leg **1** by a stop ring **63** which is attached to the base of the leg **1** and which cooperates with a shoulder upon the extension **2** as shown in Fig. 1.

The embodiment shown in Figs. 5 and 7 differs from the embodiment described before substantially therein that the push rod **15** is substituted by a spring leaf or the like **36** which is attached with one end to the lug **34** of the swingable locking member **33** and which with its other end is actuated by the switch rod **40**.

The tubular lug **39**, which is one of a plurality firmly attached to a piece of furniture for example to a table illustrated in Fig. 7, houses the extension **44** telescoping therefrom. The cylindrical middle portion **45** of said leg extension **44** serves to guide the same within the tubular leg **1**. This middle portion **45** continues upward into a portion **46** of smaller cross section and the upper end **48** thereof is reinforced by a metallic ring **49** which cooperates with the locking member **33**. On top of the leg extension **44** is a stop member which with its head **52** limits the upward movement of the leg extension **44** within the tubular leg **39** and which with a stem **51** cooperates with the switch rod **40** to hold the leg extension **44** in raised position as shown in dotted lines in Fig. 5.

The several switch rods **40** are operated in the same manner as the switch rods in the first described embodiment by a rotatable disc **53** and a lever **54** attached thereto. Each switch rod **40** actuates one of the spring leaves **37** which are attached with one end to one locking member **33** as indicated above and which with their other end freely penetrate an opening **37** in one switch rod **40**. The spring leaf **36** may, however, be substituted by a pair of springs **60** mounted in an aperture **61** of the switch rod **40**, said springs **60** acting upon a lever **59** integral with the locking member **33**.

Although two embodiments of my invention and certain modifications thereof have been shown and described by way of illustration, it will be well understood that it may be constructed in various other embodiments which come within the scope of the appended claims.

What I claim as my invention is:

1. In a piece of furniture having a plurality of tubular legs and an extension telescoping from each leg, the improvement comprising in combination an aperture in the wall of each leg, said apertures facing each other, a lock-

ing member mounted within each aperture for unobstructed pendulous movement therein, said locking member avoiding in free hanging vertical position any contact with said leg extension, at least one propping face on each leg extension to cooperate with said locking member when the same is swung inwardly into the tubular leg, and means simultaneously actuating said pendulous locking members to block the same and to release the same, respectively, so that the leg extension may be arrested and displaced, respectively, within the respective tubular leg relative thereto.

2. A piece of furniture according to claim 1 wherein the said means to actuate the locking members comprise a locking and releasing rod slidably mounted upon each leg parallel to the longitudinal axis thereof, said rod when moved downwards contacting the locking member above

and laterally to its fulcrum to effect in such position a swing motion of the locking member towards said propping faces, and releasing said locking member when the rod is lifted.

References Cited in the file of this patent

UNITED STATES PATENTS

451,430	Held	Apr. 28, 1891
862,791	Bawden et al.	Aug. 6, 1907
1,133,804	Kaufman	Mar. 30, 1915
1,370,732	Corbett	Mar. 8, 1921
1,687,128	Hall	Oct. 9, 1928
2,378,852	James	June 19, 1945
2,643,922	Rudman	June 30, 1953