United States Patent

Jarvis

[15] **3,646,351**

[45] **Feb. 29, 1972**

[54] GAS-CUSHION CORONA CHARGER

[72] Inventor: **James G. Jarvis**, Rochester, N.Y.

[73] Assignee: **Eastman Kodak Company**, Rochester, N.Y.

[22] Filed: **Feb. 16, 1971**

[21] Appl. No.: **115,726**

Related U.S. Application Data

[63] Continuation of Ser. No. 823,067, May 8, 1969, abandoned.

[52] **U.S. Cl.** .....**250/49.5 ZC**, 317/262 A

[51] **Int. Cl.** **G03g 15/02**

[58] **Field of Search** .....250/49.5 ZC; 317/262 A

[56] **References Cited**

UNITED STATES PATENTS

2,965,755	12/1960	West	250/49.5
2,965,756	12/1960	Vyverberg	250/49.5
3,254,215	5/1966	Oliphant	250/49.5
3,382,360	5/1968	Young et al.	250/49.5

Primary Examiner—William F. Lindquist

Attorney—William H. J. Kline, Robert F. Crocker and Lloyd F. Seebach

[57] **ABSTRACT**

A device for charging a xerographic or an electrostatic electrographic material by means of a cushion of flowing ionized gas. A supply of compressed air or other gas is applied to an aperture plate or a slotted tubular member for direction against a strip of material to be charged. The flow of gas is ionized by a source of potential connected between the plate and a conductive backing plate in contact with the material. The ionized gas charges the material and at the same time maintains the material in spaced relation from the plate or tubular member and against the conductive backing plate with a uniform force.

7 Claims, 5 Drawing Figures

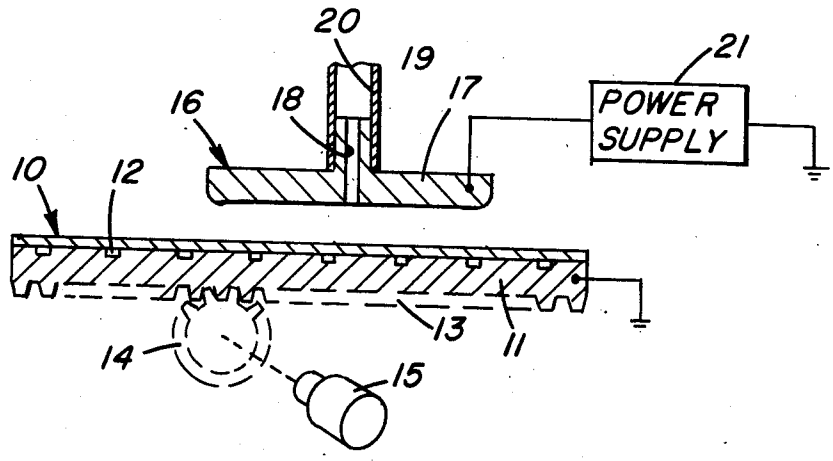

FIG. 1

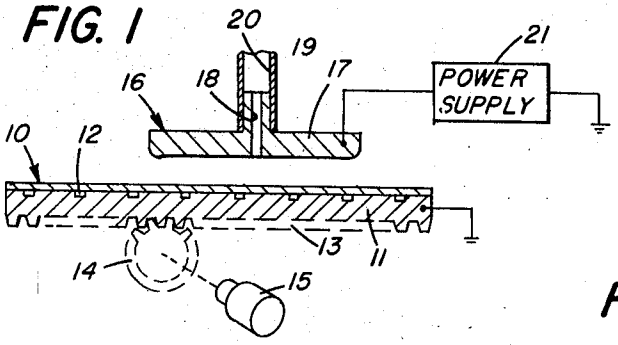

FIG. 2

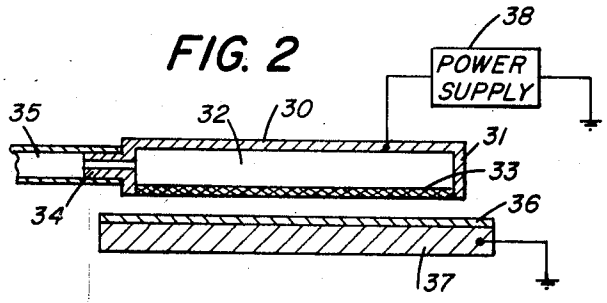

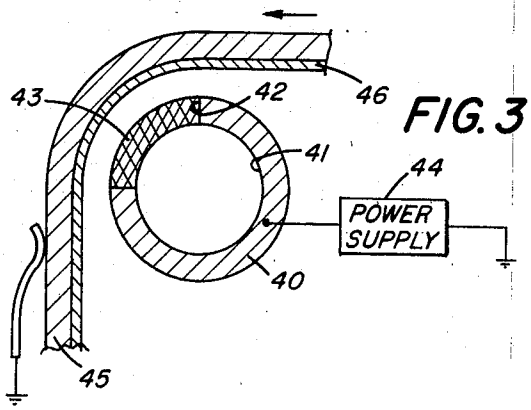

FIG. 3

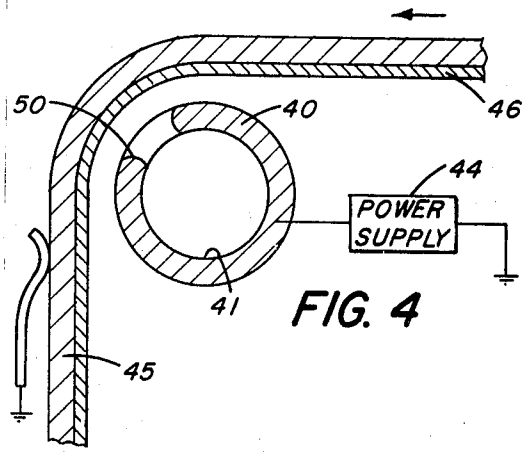

FIG. 4

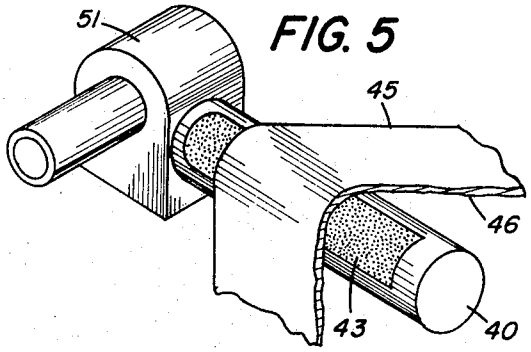

FIG. 5

JAMES G. JARVIS
INVENTOR.

BY Lloyd F. Sherlock
AGENT

GAS-CUSHION CORONA CHARGER

This application is a continuation of application Ser. No. 823,067, filed May 8, 1969, now abandoned.

FIELD OF THE INVENTION

The invention relates to a device for uniformly charging an insulating layer and, more particularly, for charging an insulating layer by means of a flow of ionized gas which also serves to maintain the material in spaced relation to the charger

DESCRIPTION OF the PRIOR ART

In the field of electroprinting, materials such as a zinc oxide-coated paper, can be used when suitably charged for retaining a latent electrostatic image upon light exposure. It is of paramount importance that the charge placed on the layer of zinc oxide be uniform throughout the full area of the sheet. This has been accomplished by charging the zinc oxide layer by means of a corona generating device which, when supplied with a sufficient potential, produces an emission of corona ions that deposit onto the surface of the zinc oxide layer. In most instances, control over the uniformity of the charge on the zinc oxide layer is effected by the relative movement of the layer with respect to the electrode. However, difficulty has been encountered in maintaining a uniform charge and this has been attributed primarily to the corona generating device. However, other factors also contribute to this difficulty; namely, the spacing between the electrode and the layer to be charged, the variations in thickness of the zinc oxide layer, and the electrical characteristics of the layer. As a result, it has not been possible to achieve a high degree of uniformity for the charge on a zinc oxide layer prior to its exposure.

Summary of the Invention

A primary object of the invention is to provide a corona charger for electrographic materials that produces a uniformity of charge on the photoconductive layer not heretofore possible.

Still another object of the invention is to provide a corona charger for electrographic materials in which a flow of ionized gas maintains the layer to be charged in spaced relation to the corona charger.

Still another object of the invention is to provide a corona charger for electrographic materials in which a flow of ionized gas maintains a substantially constant spacing between the surface receiving the charge and the corona generating device.

These and other objects and advantages will be apparent to those skilled in the art by the description which follows.

The objects of the invention are attained by a member having a chamber and an outlet that can be arranged in close proximity to the surface of a material that is to be charged. The member can be flat or tubular, and the opening can be in the form of a slot, or of considerable width, and either allowed to remain open or covered with a porous, conductive material, such as a sintered metal. The chamber is connected to a source of gas, such as air under pressure, and a potential is connected across the member and a conductive backing plate against which the material to be charged is maintained by the flow of air from the chamber. The ions generated in the narrow space or zone between the surface of the material and outlet of the charger are directed to the surface by the flow of air. In the various embodiments of the invention disclosed hereinafter, the member or the material to be charged is maintained in spaced relation, one to the other, by the flow of ionized air.

DESCRIPTION OF THE DRAWING

Reference is now made to the accompanying drawing wherein like reference numerals designate like parts and wherein:

FIG. 1 is a partial sectional and elevational view showing a simplified form of the invention in which the corona charger is maintained in a fixed and floating relation to the material to be charged;

FIG. 2 is a vertical cross section through a corona charger showing a plate-type of charger in which the opening is covered with a porous, conductive member;

FIG. 3 is a diagrammatic vertical section showing another embo;iment of the invention in which the corona charger is a tubular member having an opening that is covered by a porous conductive plate;

FIG. 4 is a vertical sectional view similar to that shown in FIG. 3 showing a tubular corona charger with an open slot; and

FIG. 5 is a perspective view showing the manner in which the corona charger can be used as a support for the web of material to be charged while at the same time serving as a guide for the web of material.

DESCRIPTION OF THE PREFERRED EMBODIMENT

The invention is described hereinafter with respect to charging a zinc oxide-coated paper, however, any electrographic or dielectric material capable of retaining a charge on a surface thereof can be used. With reference to FIG. 1, a zinc oxide-coated paper **10** is arranged on an electrically conductive plate **11** which can be provided with grooves or slots **12** that are connected to a vacuum source for retaining sheet **10** in intimate contact with plate **11**. The plate **11** is provided with a rack **13** which engages a gear **14** driven by a motor **15**. By this arrangement, the plate **11** and sheet **10** can be moved relative to a fixed corona charger designated by the numeral **16**. The charger **16** comprises a plate **17** having a hole **18** and an extension **19** by which a hose **20** connects the plate **11** to a suitable source of compressed gas, such as air. A potential designated generally by the numeral **21** is connected to plate **17** and to ground, plate **11** also being connected to ground. With a potential of −1300 volts applied to plate **17** for about 3 seconds and an air pressure of about 5 pounds/square inch applied to plate **17**, the corona charger **16** floats with respect to paper **10** and plate **11** so that the latter could be moved relative to the corona charger. The charged xerographic paper upon development with a conventional magnetic brush will have a uniform, dense deposit of toner over the full surface which is indicative of an overall uniform charge.

In FIG. 2 a conductive plate **30** is provided with extending sides **31** that form a chamber **32**. The chamber is covered with a foraminous conductive plate **33** and has a connection **34** to which a source of compressed air can be connected such as by means of hose **35**. As in FIG. 1, a zinc oxide-coated paper **36** is placed in contact with a conductive backing plate **37**. Also, a potential **38** is connected to plate **30** and ground. As in the arrangement disclosed in FIG. 1, with the application of air to the chamber **32** and the source of potential connected between plate **30** and plate **37**, the flow of air or gas that is discharged through the plate **33** is then ionized and places a uniform charge on the surface of the paper **36**. At the same time, the flow of air maintains the complete unit (plates **30** and **33**) in spaced relation to the paper. Also, as noted in FIG. 1 the charge placed on the surface of the paper results in a uniformly toned surface which is indicative of a uniform charge.

In FIG. 3 a tubular member **40** is formed of a conductive material and has closed ends so that the tube forms a chamber **41** into which a compressed gas, such as air, can be introduced. The periphery of the tube is cut away, in part, to provide an axial opening or slot **42** that is replaced or covered with a foraminous conductive sector **43** so that chamber **41** is again enclosed. A source of potential **44** is connected to tube **40** and ground with the conductive backing plate **45** also connected to ground. It will be noted that plate **45** assumes a bend or shape that conforms to that of tube **40** but is spaced therefrom by a distance greater than the thickness of the zinc

oxide-coated paper **46**. With the potential applied to tube **40** and a source of compressed air introduced into chamber **41**, the air discharged through plate **43** is then ionized and charges the surface of paper **46**. At the same time, the flow of air maintains the paper **46** in intimate contact with the backing plate **45** in the region of the sector **43**.

In FIG. **4** the tube **40** is provided with an open slot **50** that extends at least the width of the paper being charged. In this embodiment the paper **46** is also maintained against the backing plate **45** in the vicinity of slot **50**.

In both FIGS. **3** and **4**, the backing plate **45** can be an aluminum foil on which the zinc oxide layer has been coated. In this instance, the zinc oxide layer as well as the foil will be moved or can be moved as a unit with the tube **40** service as a guide roll. The tube **40** will not rotate but the air cushion will support the conductive backing plate and zinc oxide layer in spaced relation to the tube. For best results with such an arrangement, it is preferable that the peripheral or angular length of sector **43** or the slot **50** be at least equal to the wraparound of the foil backing plate and zinc oxide layer. Such an arrangement is shown diagrammatically in FIG. **5** when the tube **40** is connected directly to a source **51** for supplying the air under pressure. The axial length of slot **50** should be equal to, and preferably greater than, the width of the material being charged.

Gases other than air, such as helium, nitrogen or oxygen, can be used as the ionizing carrier in the embodiments just described. Further, vapors of liquids, such as water or trichlorethylene and mixtures of any of these with one another or with air can be used. On occasion, the relative humidity of air rises to a high enough value such that it interferes with charging. By means of the invention just described desiccated or partially desiccated air can be used to eliminate any effect due to humidity. Initiation and uniformity of the discharge between the plate or charger member and the surface to be charged can be improved by special preparation or selection of the surface of the member; e.g., its texture, resistance to corrosion, electrical conductivity, work function, etc. The surface of the member can also be coated or plated with a layer of a radioactive material; such as polonium.

The invention has been described in detail with particular reference to preferred embodiments thereof, but it will be understood that variations and modifications can be effected within the spirit and scope of the invention.

I claim:

1. A device for generating a flow of ionized gas that is directed toward one surface of a photoconductive insulating material to uniformly charge the same, comprising:

a first electrically conductive member for supporting said material with its other surface in contact therewith;

a second electrically conductive member arranged in spaced relation to said first member and to said one surface, when said material is arranged therebetween, said second member being connected to a source of pressurized gas and having an opening facing said first member for directing a flow of gas into the space between said members and against the one surface of said material to maintain the latter in contact with said first member; and

a source of potential connected across said first and second members for establishing an electrical field across said space therebetween, the ions in said gas flow being created by corona discharge at said second member and being propelled toward said one surface by said electrical field whereby said one surface is uniformly charged.

2. The device in accordance with claim **1** wherein said first member comprises a flat plate and said second member comprises an apertured disc, the other surface of said material being contiguous to the surface of said plate facing said apertured disc, and said disc and said material being movable relative to one another.

3. The device in accordance with claim **1** wherein said second member is hollow and generally rectangular in cross section and has an open side forming said opening, the latter being covered with an electrically conductive, foraminous material that faces said first member.

4. The device in accordance with claim **1** wherein said second member comprises a closed tubular member having an axial slot with respect to which said material is movable with said one surface facing said slot and spaced therefrom.

5. The device in accordance with claim **4** wherein said slot is covered with an electrically conductive, foraminous material through which said gas is discharged.

6. The device in accordance with claim **4** wherein the length of said slot is at least the same as the width of said material, the angular width of said slot is substantially the same as the wraparound on said tubular member of said material and said slot is filled with a sintered metal.

7. The device in accordance with claim **1** wherein one of said material with said first member and of said second member is moved relative to the other.

* * * * *