(No Model.) 3 Sheets—Sheet 1.

S. BERGMANN.

ELECTRIC ARC LAMP.

No. 561,560. Patented June 9, 1896.

Fig. 1,

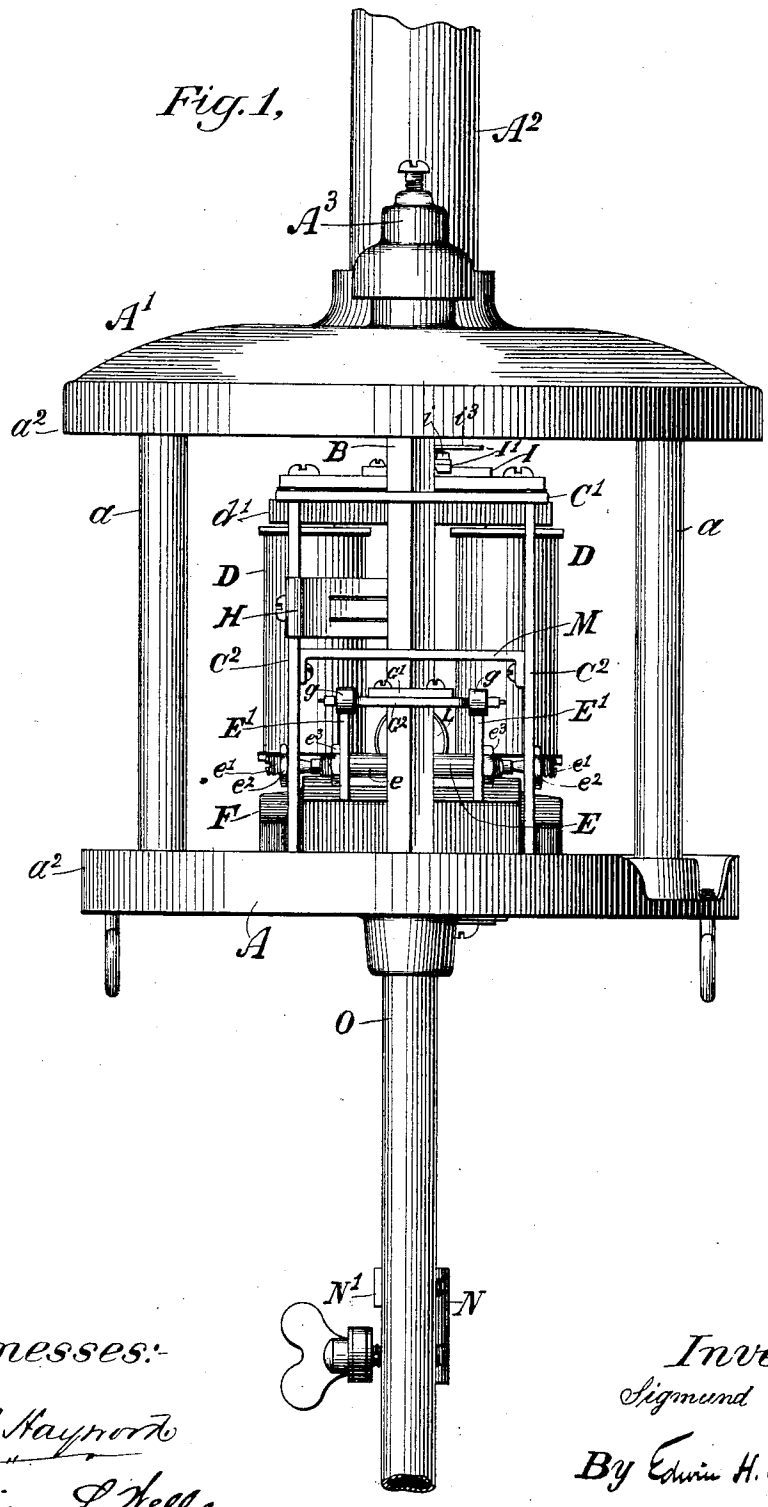

Witnesses:-

D. N. Haymond

Preston L. Wells.

Inventor:-

Sigmund Bergmann

By Edwin H. Brown

His Attorney

ANDREW B. GRAHAM, PHOTO-LITHO. WASHINGTON, D.C.

(No Model.)

3 Sheets—Sheet 2.

S. BERGMANN.

ELECTRIC ARC LAMP.

No. 561,560.

Patented June 9, 1896.

Fig. 2.

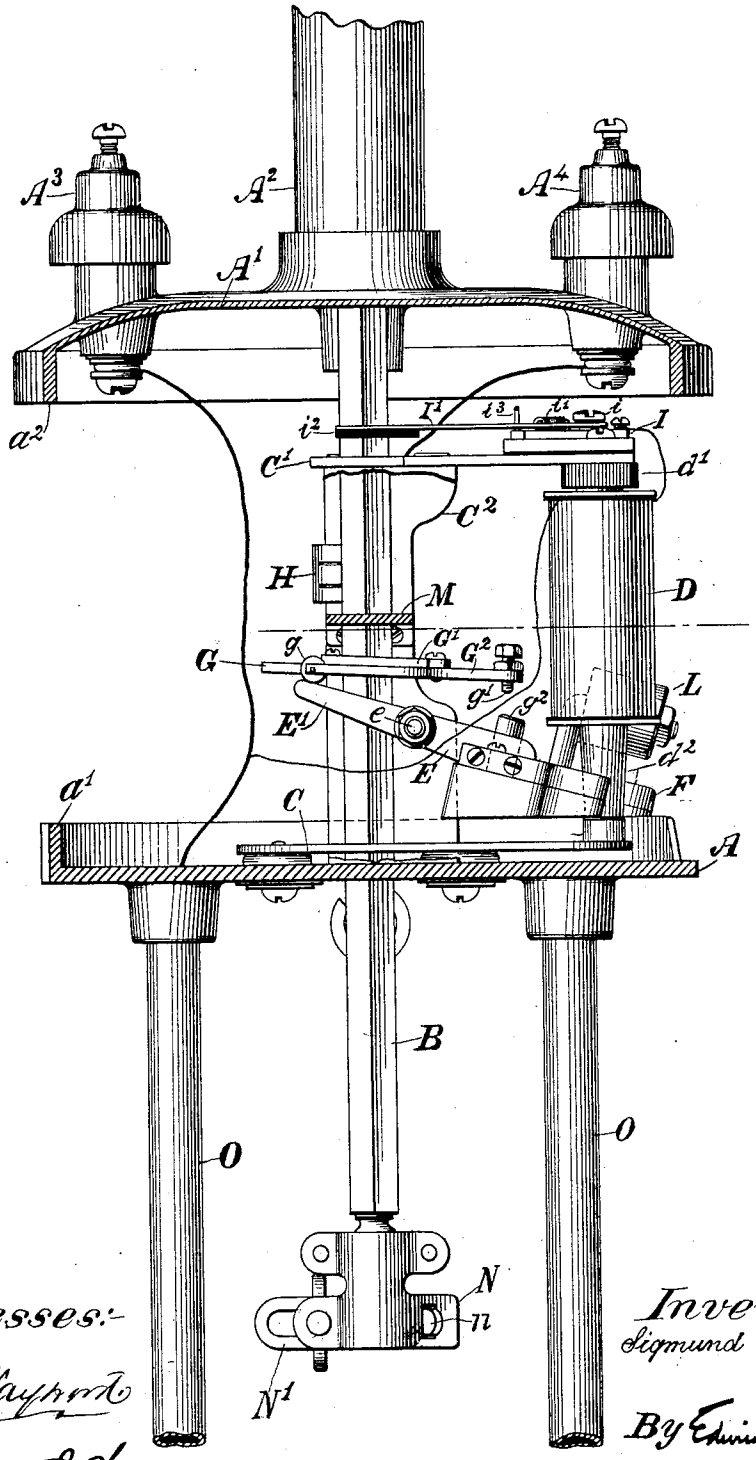

Witnesses:-

D. H. Hayhurst

Pierson L. Wells.

Inventor:-

Sigmund Bergmann,

By Edwin H. Brown

His Attorney

ANDREW B. GRAHAM, PHOTO-LITHO. WASHINGTON, D.C.

(No Model.) 3 Sheets—Sheet 3.

S. BERGMANN.

ELECTRIC ARC LAMP.

No. 561,560. Patented June 9, 1896.

Fig. 3.

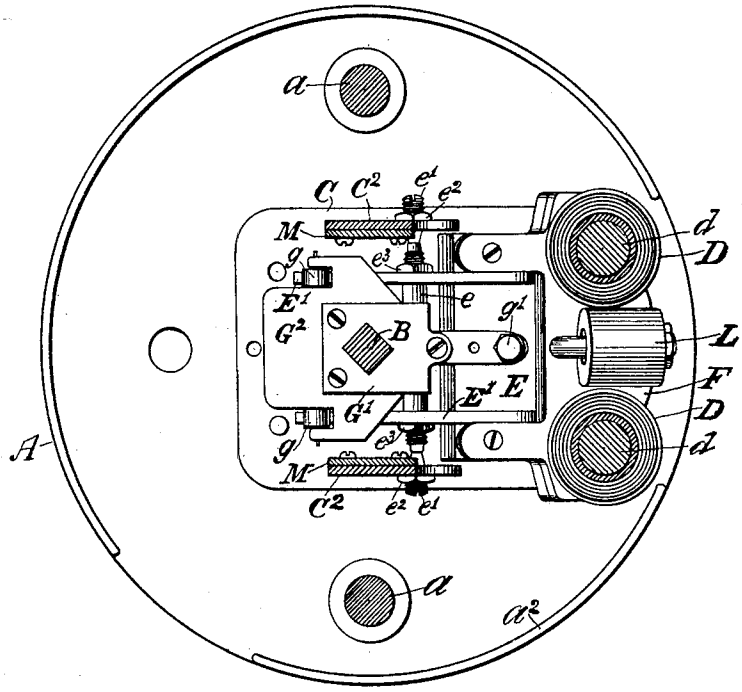

Witnesses:-

O. F. Haywood

Pierson L. Wells

Inventor:-

Sigmund Bergmann

By Edwin H. Brown

His Attorney

ANDREW B. GRAHAM, PHOTO-LITHO. WASHINGTON, D.C.

UNITED STATES PATENT OFFICE.

SIGMUND BERGMANN, OF NEW YORK, N. Y., ASSIGNOR TO THE GENERAL INCANDESCENT ARC LIGHT COMPANY, OF SAME PLACE.

ELECTRIC-ARC LAMP.

SPECIFICATION forming part of Letters Patent No. 561,560, dated June 9, 1896.

Application filed February 27, 1895. Serial No. 539,839. (No model.)

To all whom it may concern:

Be it known that I, SIGMUND BERGMANN, of the city, county, and State of New York, have invented a certain new and useful Improvement in Arc-Lamps, of which the following is a specification.

I will describe an arc-lamp embodying the features of my improvement, and then point out the novel features in a claim.

In the accompanying drawings, Figure 1 is an elevational view of a lamp embodying the features of my improvement. Fig. 2 is a view similar to Fig. 1, but shows the lamp as viewed from a position at right angles to that which results in Fig. 1. Certain parts are shown in section in this view. Fig. 3 is a plan view of the lamp, parts being shown in section.

Similar letters of reference designate corresponding parts in all figures.

As my present improvement relates more particularly to the construction and mode of operating the feeding mechanism of the lamp, I have shown such parts and parts necessary for a full understanding of my invention in detail, while other portions to which my invention does not relate are not so shown or are wholly omitted.

A designates a platform or support carrying the feed-controlling mechanism of the lamp. For inclosing and protecting such mechanism a hood A′ is provided, elevated above the support A and secured thereto by stanchions *a a*.

The support A may be provided with a transverse flange *a′*, and the hood A′ with a transverse flange a^2, to offer suitable facilities for the securing of an encircling shell (not shown) joining the peripheral portions of the support and hood.

A^2 is an upright tubular piece secured to the hood A′ and having its bore in line with the movable carbon-support B.

A^3 and A^4 are suitable clamping devices or binding-posts formed on the hood A′ and adapted to receive the terminals of the circuit supplying the lamp.

The carbon-support B is of rod-like form and is here shown as having an angular cross-section. It passes freely through suitable apertures in the support A and the hood A′.

In the present instance the operative parts of the feed-controlling mechanism are not carried directly in the platform A, but are carried by an independent frame comprising a lower plate C, an upper plate C′, and connecting side pieces C^2 C^2. The lower plate C of the frame is secured to the support A, but in a manner to be insulated therefrom.

D D are electromagnets whose cores *d d* are fitted between an upper cross-piece or yoke *d′*, of magnetic material, attached to plate C′, and blocks d^2 d^2, of non-magnetic material, carried by the lower plate C. This double support of the cores gives additional strength.

E is a vibrating frame pivoted to the side pieces C^2 C^2. For this pivotal support I have in the present instance provided the shaft *e* of the frame with cup-shaped ends, adapted to receive the pointed ends of screws *e′ e′*, entering tapped holes in the side pieces. The screws *e′ e′* may be provided with lock-nuts e^2 e^2 to firmly secure them in position when adjusted.

The vibrating frame E includes arms E′, extending on both sides of the shaft *e*, and they may be secured to the latter. For this purpose the end portions of the shaft may be reduced in diameter and provided with screw-threads. The arms E′ E′ may be provided with suitable openings to slip over the reduced portions and contact with the shoulders formed by the enlarged central portion of the shaft. They may be secured in place by nuts e^3 e^3.

That end of the frame E adjacent to the magnets D D carries a block of magnetic material, as soft iron, F, forming the armature of the magnets. G is a slip-and-grip clutch embracing the carbon-support B and operated by the outer or free ends of the arms E′ E′ and the vibrating frame E. In the present instance this clutch comprises a clutch-plate G′, provided with an opening similar in shape to the cross-section of the carbon-support B, but slightly greater in area. Consequently when the clutch-plate G′ is in such a position that the opening through it is in alinement with the carbon-support the latter will freely slip back and forth through the same; but when the plate is tilted at one end it will grip the carbon-support B and prevent the longitudinal movement of the same. In the pres-

ent instance I have shown the plate G′ as being secured to a separate plate G^2, to which latter are secured the various parts for coacting with the vibrating frame by means of which the clutch is operated. Friction-rollers *g g* are journaled at the outer portion of the plate G^2 at one side of the axis *e*, while on the opposite side the plate is provided with a downwardly-projecting stud *g′*.

The rollers *g g* are adapted to be carried by the arms E′ E′ of the vibrating frame E at their outer extremities. When so carried, the clutch-plate G′ will be tilted, as the line joining its points of support does not pass through the center of gravity of the plate, and opposite sides of the opening in the plate G′ will be forcibly pinched against opposite sides of the carbon-support, holding the same from sliding through the clutch. If, however, the clutch-plate G′ is supported on both sides of the carbon-support B, the plate may be caused to assume a position in which the clutch-opening is in alinement with the support B. The latter will then be permitted to freely slide through the opening. For this purpose the armature end of the vibrating frame E is provided with a lug g^2, adapted to contact with the stud *g′* when the frame has been drawn upward by the action of the magnet. The stud *g′* may be in the form of a screw provided with a lock-nut for the purposes of adjustment. The magnets D D are here shown as having their coils in shunt with the circuit through the carbons through an interposed circuit-breaker.

For a better understanding of this circuit-breaker and its operation I will first premise that one of the line-terminal binding-posts—in the present instance A^4—is electrically connected to one of the side plates C^2, which latter is in electrical contact with the upper-carbon support B by means of a brush H, attached to the side plate and bearing against the support. The lower carbon is electrically connected to the binding-post A^3.

I will describe the circuit-breaker interposed in the circuit of the magnet-coil. I is a block supported on the upper plate C′, but insulated therefrom. It is provided with an arm I′, pivoted to the block by a suitable screw *i* and drawn to one side by a spring *i′*. Its free end extends outward and contacts with the support B. It is provided with a piece of insulating material i^2 at its lower outer surface, which, when the support B has descended to its lowest point, bears upon the top of the support, holding the metallic portion of the arm I′ away from the support B. The spring *i′* draws the arm against the support B. A safety-stop i^3 may be supplied to the block I to prevent the withdrawal of the arm too far to one side.

The coils of magnets D D form continuations of each other. One end of one coil is attached to the block I, while the free end of the opposite coil may be connected with the circuit-wire leading to the binding-post A^3.

The frame E will preferably be supplied with an adjustable weight L for the purpose of adjustment. M is a stretcher extending between the side pieces C^2 C^2 and embracing the support B, its purpose being to contact with the clutch-plate G′, if the latter is accidentally carried upward, and disengage the same from the support B.

The clamp for the carbon-rod carried by the support B may be of any suitable design. In the construction shown the extremity of the support B is ball-shaped, while the clamp is composed of two members, one of which, N, is secured to the ball to swivel about the same, while the other member, N′, of the clamp is provided with a tongue *n*, entering a recess in the part N, and having a slot, through which passes a thumb-screw engaging with a tapped hole in the member N.

The lower-carbon support may be of any suitable design, and as it forms no part of my invention I have not considered it necessary to illustrate the same.

It will preferably be carried by arms O O, secured to the platform A′. One or both of the arms may be hollow and the wire leading to the lower carbon may pass down the same.

Having described my invention, what I claim as new, and desire to secure by Letters Patent, is—

The combination of a movable carbon-support, a clutch for coacting with the support, a pivoted frame provided with arms on each side of the carbon-support which are adapted to impinge against the clutch and cause its engagement with the support, a stop-piece also adapted to impinge against the clutch and cause its disengagement from the support, and a shunt-electromagnet for moving the pivoted frame, substantially as specified.

In testimony whereof I have signed my name to this specification in the presence of two subscribing witnesses.

SIGMUND BERGMANN.

Witnesses:
P. H. KLEIN, Jr.,
P. M. MOWREY.