(12) INTERNATIONAL APPLICATION PUBLISHED UNDER THE PATENT COOPERATION TREATY (PCT)

(19) World Intellectual Property Organization
International Bureau

(43) International Publication Date
29 December 2016 (29.12.2016)

WIPO | PCT

(10) International Publication Number
WO 2016/209222 A1

(51) International Patent Classification:
F23R 3/00 (2006.01)

(21) International Application Number:
PCT/US2015/037385

(22) International Filing Date:
24 June 2015 (24.06.2015)

(25) Filing Language: English

(26) Publication Language: English

(71) Applicant: **SIEMENS AKTIENGESELLSCHAFT** [DE/DE]; Wittelsbacherplatz 2, 80333 München (DE).

(71) Applicant *(for BW, GH, GM, KE, LR, LS, MW, MZ, NA, RW, SD, SL, ST, SZ, TZ, UG, ZM, ZW only)*: **SIEMENS ENERGY, INC.** [US/US]; 4400 Alafaya Trail, Orlando, Florida 32826-2399 (US).

(72) Inventors: **SPENCE, Kevin J.**; 1104 Winthrop Court, Winter Springs, Florida 32708 (US). **GAMBACORTA, Domenico**; 1535 Bullbush Way, Oviedo, Florida 32765 (US). **RAMIER, Stephen A.**; 466 Douglas Avenue, Fredericton, New Brunswick E3A 5T1 (CA).

(74) Agent: **KUPSTAS, Tod**; Siemens Corporation- Intellectual Property Dept., 3501 Quadrangle Blvd Ste 230, Orlando, Florida 32817 (US).

(81) Designated States *(unless otherwise indicated, for every kind of national protection available)*: AE, AG, AL, AM, AO, AT, AU, AZ, BA, BB, BG, BH, BN, BR, BW, BY, BZ, CA, CH, CL, CN, CO, CR, CU, CZ, DE, DK, DM, DO, DZ, EC, EE, EG, ES, FI, GB, GD, GE, GH, GM, GT, HN, HR, HU, ID, IL, IN, IR, IS, JP, KE, KG, KN, KP, KR, KZ, LA, LC, LK, LR, LS, LU, LY, MA, MD, ME, MG, MK, MN, MW, MX, MY, MZ, NA, NG, NI, NO, NZ, OM, PA, PE, PG, PH, PL, PT, QA, RO, RS, RU, RW, SA, SC, SD, SE, SG, SK, SL, SM, ST, SV, SY, TH, TJ, TM, TN, TR, TT, TZ, UA, UG, US, UZ, VC, VN, ZA, ZM, ZW.

(84) Designated States *(unless otherwise indicated, for every kind of regional protection available)*: ARIPO (BW, GH, GM, KE, LR, LS, MW, MZ, NA, RW, SD, SL, ST, SZ, TZ, UG, ZM, ZW), Eurasian (AM, AZ, BY, KG, KZ, RU, TJ, TM), European (AL, AT, BE, BG, CH, CY, CZ, DE, DK, EE, ES, FI, FR, GB, GR, HR, HU, IE, IS, IT, LT, LU, LV, MC, MK, MT, NL, NO, PL, PT, RO, RS, SE, SI, SK, SM, TR), OAPI (BF, BJ, CF, CG, CI, CM, GA, GN, GQ, GW, KM, ML, MR, NE, SN, TD, TG).

Published:

— *with international search report (Art. 21(3))*

(54) Title: COMBUSTOR BASKET COOLING RING

FIG 3

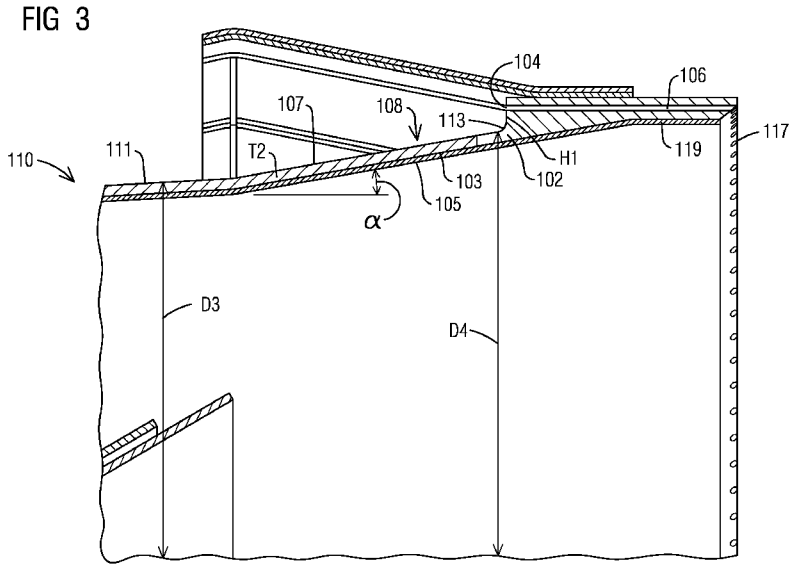

(57) Abstract: A cooling ring (102) of a combustor basket system (110) has a transition zone 108 that extends to a cooling channel (106) at a cooling channel entrance (104). The transition zone (108) has the substantially the same material strength throughout the length of the transition zone (108). By having the same material strength throughout the length of the transition zone (108), the cooling ring (102) is able to withstand greater stresses than previously used cooling rings. One way in which this is accomplished is by having a uniform thickness.

WO 2016/209222 A1

COMBUSTOR BASKET COOLING RING

BACKGROUND

1. Field

[0001] Disclosed embodiments are generally related to combustors and, more particularly to cooling rings used with combustor baskets.

2. Description of the Related Art

[0002] Cooling rings used with combustor baskets typically require reduction of the outer diameter of the cooling ring just before an entrance into a cooling channel. The diameter of the cooling ring is reduced by reducing the material thickness of the cooling ring. The reduction of the outer diameter occurs due to manufacturing needs and to provide the cooling air with a smooth entrance to the combustor basket's cooling channels.

[0003] Fig. 1 shows a standard combustor basket system 10 that uses a typical cooling ring 2. In Fig. 1 the cooling ring 2 is cylindrical shaped. The cooling ring 2 has an outer diameter D_1 throughout a majority of its length. Prior to a cooling channel entrance 4 of a cooling channel 6 is a transition zone 8, which begins at transition zone start 11 and ends at transition zone end 13. Transition zone end 13 is located at the cooling channel entrance 4. The transition zone 8 has a wall 3, which has an inner surface 5 and outer surface 7. The transition zone 8 has an outer diameter D_1 that is reduced to an outer diameter D_2 as it approaches the transition zone end 13 and the cooling channel entrance 4. D_2 is the outer diameter of the cooling ring 2 at a portion of the transition zone 8. This reduction to outer diameter D_2 is due to reduction of the material thickness of the cooling ring 2 at the transition zone 8. This is done so that flow of air remains beneficial for the combustor basket system 10.

[0004] The reduction of the outer diameter D_1 to the outer diameter D_2 of the cooling ring 2 prior to the entrance to the cooling channel 6 reduces the thickness T_1

of the cooling ring 2. The reduction of the thickness T_1 of the cooling ring 102 results in reduction of the material strength in that area, leading to a reduction in low cycle fatigue life.

[0005] Figs. 2A and 2B illustrate the stresses that occur with the cooling ring 2. Fig. 2A depicts the temperatures that impact the cooling ring 2. Fig. 2B illustrates the Von Mises stresses that occur within the cooling ring 2 due to the effect of the temperatures. As shown in Fig. 2B, the Von Mises stresses are greater at the location of the cooling ring 2 where the outer diameter D_1 is reduced to the outer diameter D_2 and where there is reduction of the thickness T_1 of wall 3.

[0006] In the past to address this problem the temperature of the cooling ring in the weakened area was reduced. Reducing the temperature limited the stresses that occur at the area to an acceptable value, however would require trade-offs to other aspects of the combustor basket system.

SUMMARY

[0007] Briefly described, aspects of the present disclosure relate to cooling rings used in combustor basket systems.

[0008] A first aspect of the disclosure provides a combustor basket system having a cooling ring comprising a transition zone, wherein the transition zone extends from a transition zone start to a cooling channel entrance. The combustor basket system also comprises a transition zone that has a cross-section profile configured to provide a substantially uniform material strength.

[0009] A second aspect of the disclosure provides a cooling ring for use with a combustor basket system. The cooling ring comprises a wall having an outer surface and an inner surface. The wall forms a transition zone that extends to a cooling channel entrance of the basket cooling system. The wall has a thickness which is the distance between the outer surface and the inner surface and further wherein the material strength of the wall is substantially uniform throughout the transition zone.

BRIEF DESCRIPTION OF THE DRAWINGS

[0010] Fig. 1 is cross-sectional side view of a combustor basket system that uses a prior art cooling ring.

[0011] Fig. 2A shows a diagram illustrating the temperatures that affect the cooling ring shown in Fig. 1.

[0012] Fig. 2B shows a diagram illustrating the Von Mises stresses that occur with the cooling ring shown in Fig 1.

[0013] Fig. 3 is a cross-sectional side view of a combustor basket system that uses a cooling ring in accordance with an embodiment of the present disclosure.

[0014] Fig. 4A shows a diagram illustrating the temperatures that affect the cooling ring shown in Fig. 3.

[0015] Fig. 4B shows a diagram illustrating the Von Mises stresses that occur with the cooling ring show in Fig. 3.

DETAILED DESCRIPTION

[0016] To facilitate an understanding of embodiments, principles, and features of the present disclosure, they are explained hereinafter with reference to implementation in illustrative embodiments. Embodiments of the present disclosure, however, are not limited to use in the described systems or methods.

[0017] The components and materials described hereinafter as making up the various embodiments are intended to be illustrative and not restrictive. Many suitable components and materials that would perform the same or a similar function as the materials described herein are intended to be embraced within the scope of embodiments of the present disclosure.

[0018] To ameliorate the problems that occur due to the reduction in the thickness of the cooling ring 2 shown in Fig. 1, an embodiment of the present disclosure has the location of the entrance to cooling channels not at a cylindrical section of a combustor, but instead locates the entrance to the cooling channels at a conical section of a combustor basket system. By moving the transition zone and entrance to a conical section of the of the combustor basket system, the machined feature of the cooling ring 2 that results in a weakness is eliminated and the thickness of the cooling ring can be maintained throughout its length. This also provides the benefit of being able to use fewer liners than in previous combustor basket systems.

[0019] Referring to Fig. 3, wherein an embodiment of the present invention shown, a cooling ring 102 is shown used in combustor basket system 110. The combustor basket system 110 shown in Fig. 3 is colloquially referred to as a G-type basket style system. By "G-type basket style" it is meant the basket is used with a G-frame combustor. With a G-type basket style the active combustion length is split between 25% being the combustor basket and 75% the transition zone. In other words, the transition zone is longer than the combustor basket. In other types of combustor basket systems, the active combustion length is generally split between the combustor basket and the transition zone so that it is 50% combustor basket and 50% transition zone. While, the combustor basket system 110 shown in Fig. 3 is a G-type basket style, it is contemplated that other types of styles may be employed. For example, the cooling ring 102 may be employed with baskets colloquially referred to as "D-type," "E-type," "F-type", "H-type baskets" and "J-type baskets."

[0020] Still referring to Fig. 3, the cooling ring 102 is formed by a wall 103 that has an inner surface 105 and an outer surface 107 and forms transition zone 108. In the embodiment shown in Fig. 3, the cooling ring 102 is conically shaped. However it should be understood that other shapes may be accommodated provided that the cooling ring 102 is able to maintain its material strength at the transition zone 108. By "material strength" it is meant that that the stresses that the material is able to withstand due to environmental factors, such as forces impacting the material or temperatures that the material can withstand without failure. The limiting factor of cooling rings is low cycle fatigue life which is impacted by material properties and the temperature.

[0021] The transition zone 108 is the portion of the cooling ring 102 that begins at transition zone start 111 and ends at transition zone end 113. Transition zone start 111 may be the area where the cooling ring 102 begins, or alternatively an area proximate to where the cooling ring 102 begins. The transition zone start 111 may also begin prior to the hot section of the combustor basket system 110, however the transition zone start 111 may be located after another cooling feature of the combustor basket system 110. Transition zone end 113 is that area of the transition zone 108 where the cooling channel entrance 104 begins. The transition zone 108 may be 75% of the length of the active combustion length, which is defined as the length of the combustor in which combustion occurs.

[0022] The cooling ring 102 may be made of nickel alloys with high nickel concentrations, or other materials capable of withstanding temperatures found within combustor basket system 110. Generally speaking the temperatures that the cooling ring 102 can withstand in the transition zone 108 are temperatures within the range of 500 to 1000 °C, more preferably the cooling ring 102 can withstand temperatures greater than 700 °C.

[0023] The transition zone 108 of the cooling ring 102 is able to withstand temperatures greater than 750 °C without having to provide additional measures to cool the area in the transition zone 108, such as those required in typical combustor basket systems. In some embodiments this means that the number of air holes 117 located in the combustor basket system 110 may be reduced. For example the number of air holes used in previous combustor basket systems may be greater than 180. In combustor basket system 110 the number of air holes 117 may be less than 180 and may be as low as 90, or less.

[0024] Still referring to Fig. 3, the combustor basket system 110 has a cooling channel entrance 104 that permits access of cooling air into a cooling channel 106. In an embodiment of the present invention, the outer diameter D_3 of the cooling ring 102 gradually increases, to the diameter D_4 as it approaches cooling channel entrance 104. The gradual increase may be accomplished by having an angle α that is less than about 10° but greater than 3°, and more preferably from between about 4-6°. The angle α is an angle that is formed between a point on the horizontal line formed by the

central axis of the cooling basket system 110 and a point on the inner surface 105 of the wall 103.

[0025] While the outer diameter of the cooling ring 102 gradually increases, the thickness T_2 of the cooling ring 102 may remain substantially constant, that is within appropriate manufacturing tolerances. The thickness T_2 is the distance between the outer surface 107 and the inner surface 105 of the wall 103 of the cooling ring 102. Thus the transition zone 108 has substantially the same thickness T_2 throughout. Preferably the thickness T_2 is between 4 to 12 mm and more preferably between 5-8 mm, while it is contemplated that a uniform thickness extends throughout the transition zone 108, it should be understood that preferably the thickness is such that the integrity of the cooling ring 102 is not compromised during use due to material weaknesses, or that the Von Mises stresses that affect the cooling ring 102 are such that they do not adversely impact the cooling ring 102 in a particular location. In other words, maintaining the thickness T_2 constant throughout the transition zone 108 is one way in which material weaknesses do not adversely impact one particular area of the cooling ring 102. Other features of the cooling ring 2, discussed herein, may also provide ways in which the material strength of the cooling ring 2 may remain constant throughout the transition zone 108.

[0026] In an embodiment of the present disclosure, the transition zone 108 is integrally formed as part of the cooling ring 102. However, the transition zone 108 may also be formed from sheet metal and welded to the cooling ring 102. By maintaining the thickness T_2 substantially constant the weakness exhibited by typical cooling rings is avoided because there is no change in the material thickness of the transition zone 108 thereby maintaining a uniform material strength.

[0027] Additionally, the transition zone 108 approaches the cooling channel entrance 104 with a step-like feature having a having a height of H_1. The height H_1 is the distance the cooling channel entrance 104 is above the outer surface 103. H_1 may be between the ranges of 3 to 15 mm. The height H_1 plays a beneficial role in the flow of air through the combustor basket system 110.

[0028] Figs. 4A and 4B illustrate representative stresses that may occur with the

cooling ring 102. Fig. 4A depicts the temperatures that impact the cooling ring 102. Fig. 4B illustrates representative Von Mises stresses that occur within the cooling ring 102 due to the impact of the temperature on the cooling ring 102. As shown in Fig. 4B, the Von Mises stresses are reduced at the cooling channel entrance 104, as compared with the cylindrical cooling ring 2, because there is no reduction in the thickness T_2 of the cooling ring 102 at the cooling channel entrance 104. Further, the angle and direction at which the transition zone 108 meets the cooling channel entrance 104 permits there to be smooth flow of air. Further, as opposed to typical combustor basket systems, the number of liners 119 used in the system may be reduced.

[0029] While embodiments of the present disclosure have been disclosed in exemplary forms, it will be apparent to those skilled in the art that many modifications, additions, and deletions can be made therein without departing from the spirit and scope of the invention and its equivalents, as set forth in the following claims.

What is claimed is:

1. A combustor basket system (110) comprising:
a cooling ring (102) comprising a transition zone (108), wherein the transition zone (108) extends from a transition zone start (111) to a cooling channel entrance (104); and
wherein the transition zone (108) comprises a cross-section profile configured to provide a substantially uniform material strength.

2. The system of claim 1, wherein the transition zone (108) has a uniform thickness.

3. The system of any one of claims 1-2, wherein the cooling ring (102) is conical shaped.

4. The system one of claims 1-3, wherein the cooling ring (102) can withstand temperatures substantially above 700° without failure.

5. The system of any one of claims 1-4, wherein an outer diameter of the cooling ring (102) is larger at a first location of the transition zone (108) than at another location of the transition zone (108).

6. The system of any one of claims 1-5, wherein the outer diameter of the cooling ring (102) is greatest closest to the cooling channel entrance (104).

7. The system of any one of claims 1-6, wherein the basket cooling system (110) has a transition zone (108) that is 75% of an active combustion length.

8. The system of any one of claims 1-7, wherein the transition zone (108) has a step-like feature at the cooling channel entrance (104).

9. The system of any one of claims 1-8, wherein there is an angle α that is between about 3 to 10°.

10. The system of any one of claims 1-9, wherein the thickness of the transition zone (108) is between 5-8 mm.

11. A cooling ring (102) for use with a basket cooling system (110) comprising:

a wall (103) having an outer surface (107) and an inner surface (105); wherein the wall (103) forms a transition zone (108) that extends to a cooling channel entrance (104) of the basket cooling system (110);

wherein the wall (103) has a thickness which is the distance between the outer surface (107) and the inner surface (105), and

wherein the material strength of the wall (103) is substantially uniform throughout the transition zone (108).

12. The cooling ring (102) of claim 11, wherein the wall (103) has a uniform thickness.

13. The cooling ring (102) of any one of claims 11-12, wherein the cooling ring (102) is conical shaped.

14. The cooling ring (102) of any one of claims 11-13, wherein the cooling ring (102) can withstand temperatures substantially above 700° without failure.

15. The cooling ring (102) of any one of claims 11-14, wherein an outer diameter of the cooling ring (102) is larger at a transition zone end (113) than at transition zone start (111).

16. The cooling ring (102) of any one of claims 11-15, wherein the outer diameter of the cooling ring (102) is greatest closest to a cooling channel entrance (104).

17. The cooling ring (102) of any one of claims 11-16, wherein the basket cooling system (110) has a transition zone (108) that is 75% of an active combustion length.

18. The cooling ring (102) of any one of claims 11-17, wherein the transition zone (108) has a step-like feature located proximate to a cooling channel entrance (104).

19. The cooling ring (102) of any one of claims 11-18, wherein there is an angle α that is between about 3 to 10°.

20. The cooling ring (102) of any one of claims 11-19, wherein the thickness of the transition zone (108) is between 5-8 mm.

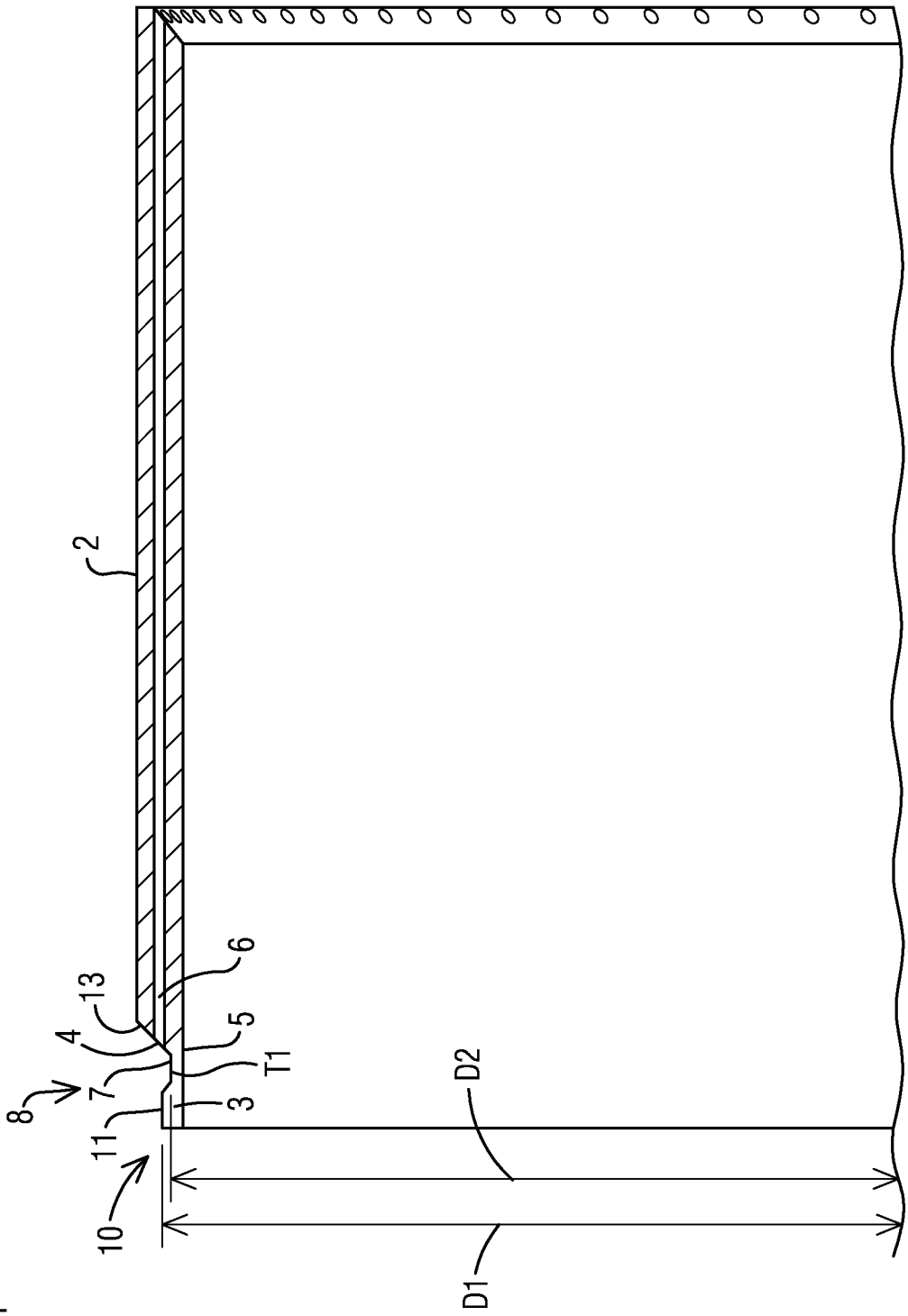

FIG 1
PRIOR ART

FIG 2A

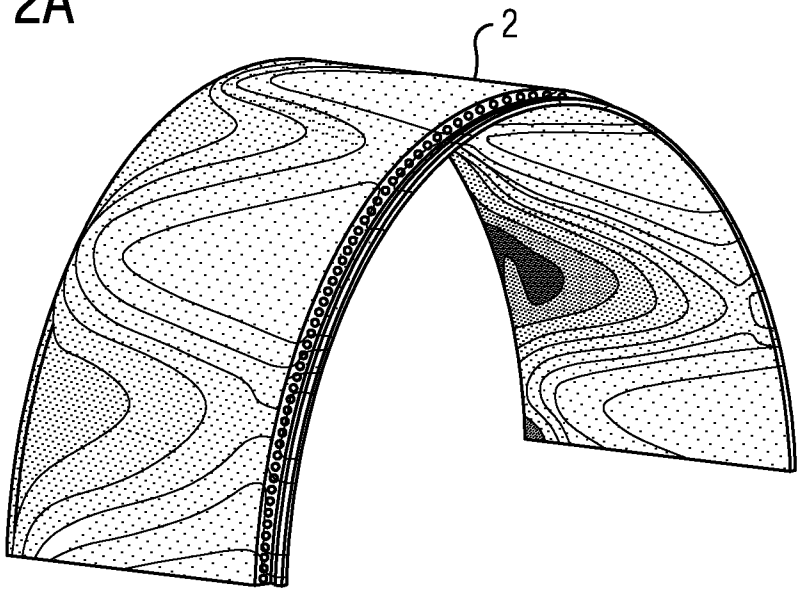

FIG 2B

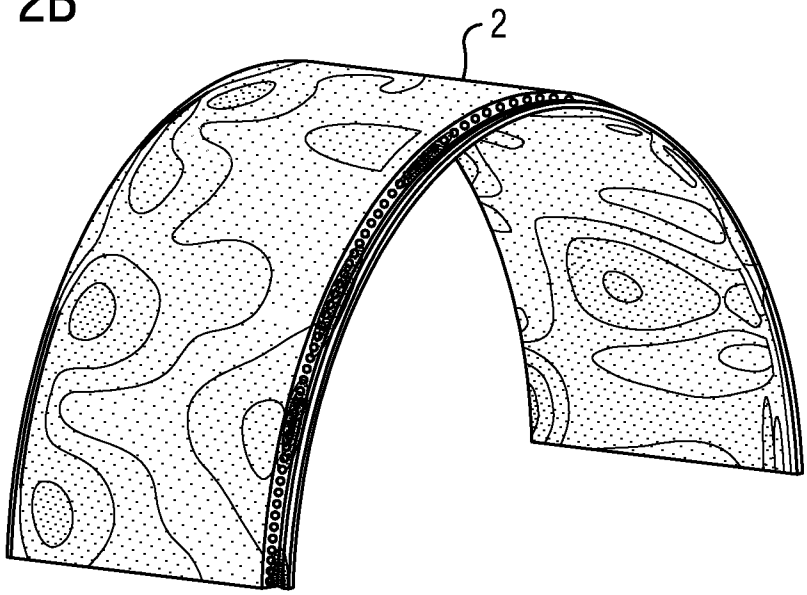

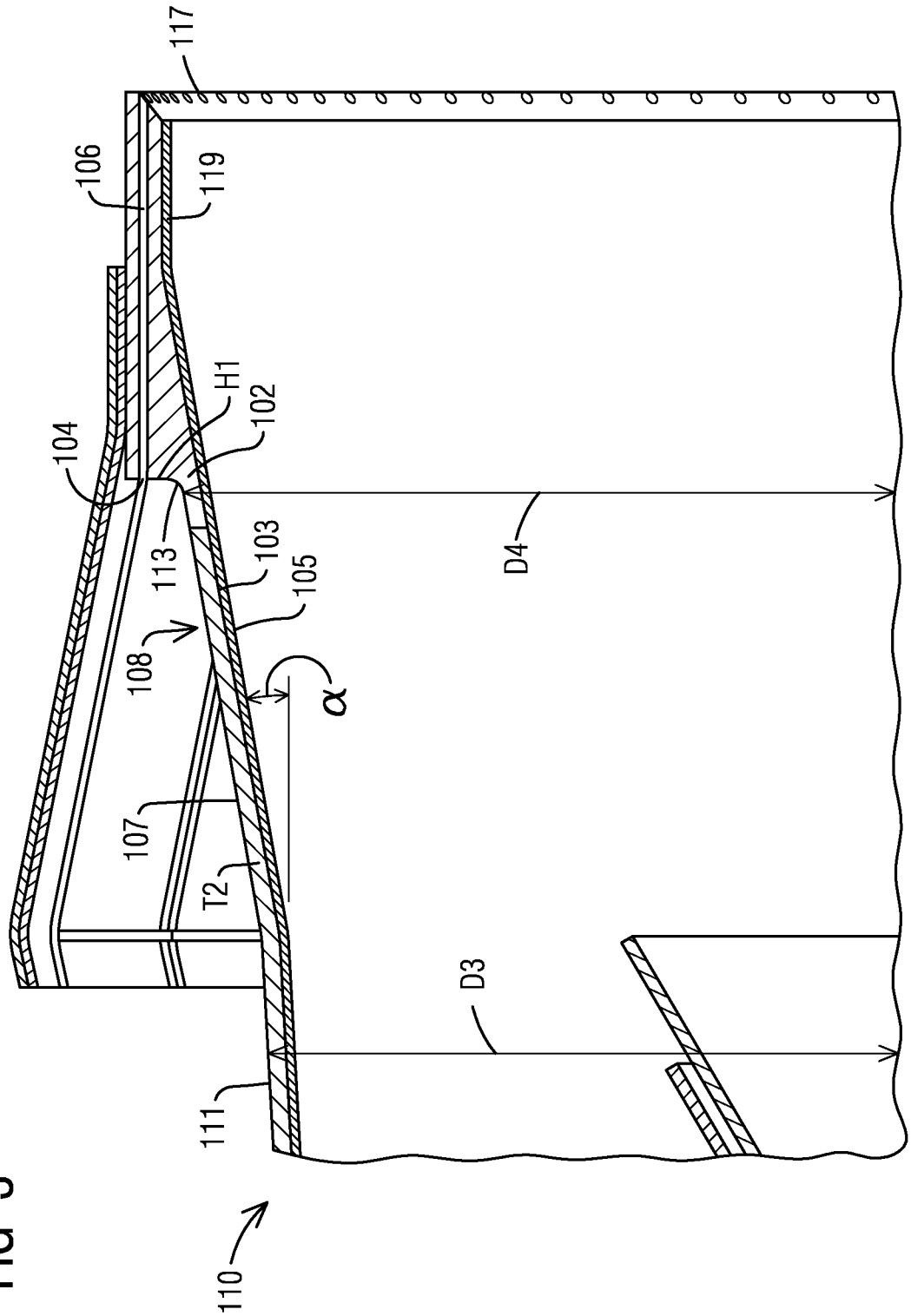

FIG 3

FIG 4A

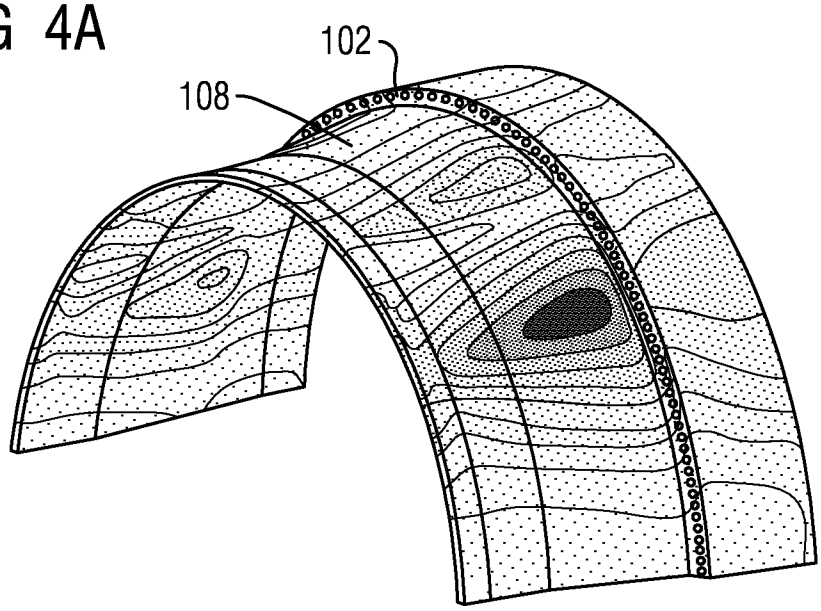

FIG 4B

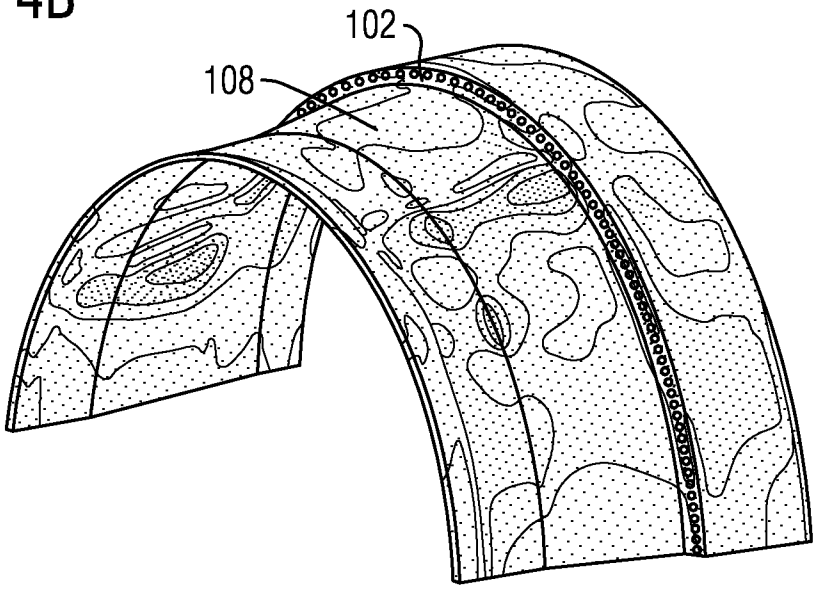

INTERNATIONAL SEARCH REPORT

International application No
PCT/US2015/037385

A. CLASSIFICATION OF SUBJECT MATTER
INV. F23R3/00
ADD.

According to International Patent Classification (IPC) or to both national classification and IPC

B. FIELDS SEARCHED

Minimum documentation searched (classification system followed by classification symbols)
F23R

Documentation searched other than minimum documentation to the extent that such documents are included in the fields searched

Electronic data base consulted during the international search (name of data base and, where practicable, search terms used)
EPO-Internal, WPI Data

C. DOCUMENTS CONSIDERED TO BE RELEVANT

Category*	Citation of document, with indication, where appropriate, of the relevant passages	Relevant to claim No.
X A	WO 2014/137469 A1 (ALSTOM TECHNOLOGY LTD [CH]; SULLIVAN DANIEL J [US]; STUTTAFORD PETER J) 12 September 2014 (2014-09-12) page 1, lines 4,5; figures 1,3,4 page 3, line 18 - page 4, line 23 -----	1-6, 8-14,16, 18-20 7,15,17
X	EP 2 144 003 A2 (UNITED TECHNOLOGIES CORP [US]) 13 January 2010 (2010-01-13) paragraphs [0001], [0003] - [0005]; figures 1,2A,3 paragraph [0010] - paragraph [0014] ----- -/--	1-5, 8-14,16, 18-20

[X] Further documents are listed in the continuation of Box C.

[X] See patent family annex.

* Special categories of cited documents :

"A" document defining the general state of the art which is not considered to be of particular relevance

"E" earlier application or patent but published on or after the international filing date

"L" document which may throw doubts on priority claim(s) or which is cited to establish the publication date of another citation or other special reason (as specified)

"O" document referring to an oral disclosure, use, exhibition or other means

"P" document published prior to the international filing date but later than the priority date claimed

"T" later document published after the international filing date or priority date and not in conflict with the application but cited to understand the principle or theory underlying the invention

"X" document of particular relevance; the claimed invention cannot be considered novel or cannot be considered to involve an inventive step when the document is taken alone

"Y" document of particular relevance; the claimed invention cannot be considered to involve an inventive step when the document is combined with one or more other such documents, such combination being obvious to a person skilled in the art

"&" document member of the same patent family

Date of the actual completion of the international search	Date of mailing of the international search report
15 February 2016	22/02/2016

Name and mailing address of the ISA/	Authorized officer
European Patent Office, P.B. 5818 Patentlaan 2 NL - 2280 HV Rijswijk Tel. (+31-70) 340-2040, Fax: (+31-70) 340-3016	Hauck, Gunther

1

Form PCT/ISA/210 (second sheet) (April 2005)

INTERNATIONAL SEARCH REPORT

International application No
PCT/US2015/037385

C(Continuation). DOCUMENTS CONSIDERED TO BE RELEVANT

Category*	Citation of document, with indication, where appropriate, of the relevant passages	Relevant to claim No.
X	US 2005/262844 A1 (GREEN ANDREW [US] ET AL) 1 December 2005 (2005-12-01) paragraph [0001] - paragraph [0003]; figures 1-5 paragraphs [0007], [0008] paragraphs [0019], [0020], [0023] -----	1,2,4, 8-12,14, 18-20
A	EP 2 730 845 A1 (MITSUBISHI HEAVY IND LTD [JP]) 14 May 2014 (2014-05-14) paragraph [0001]; figure 1 paragraph [0032] - paragraph [0037] -----	1,11

1

INTERNATIONAL SEARCH REPORT

Information on patent family members

International application No
PCT/US2015/037385

Patent document cited in search report	Publication date	Patent family member(s)	Publication date
WO 2014137469 A1	12-09-2014	US 2014208756 A1	31-07-2014
		WO 2014137469 A1	12-09-2014
EP 2144003 A2	13-01-2010	EP 2144003 A2	13-01-2010
		US 2010005803 A1	14-01-2010
US 2005262844 A1	01-12-2005	NONE	
EP 2730845 A1	14-05-2014	CN 103620307 A	05-03-2014
		EP 2730845 A1	14-05-2014
		JP 5804808 B2	04-11-2015
		JP 2013019567 A	31-01-2013
		KR 20140012183 A	29-01-2014
		US 2013008167 A1	10-01-2013
		US 2015101343 A1	16-04-2015
		WO 2013005651 A1	10-01-2013