April 13, 1965 R. M. JENSEN 3,177,636

BAG HOUSE CONSTRUCTION

Filed March 19, 1962

Fig. 1

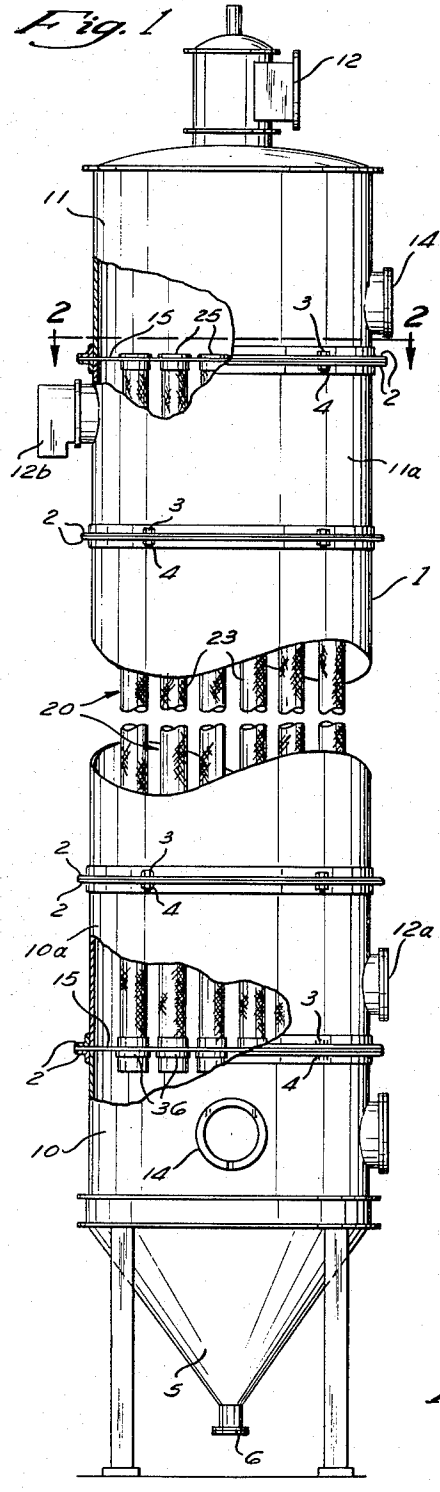

Fig. 2

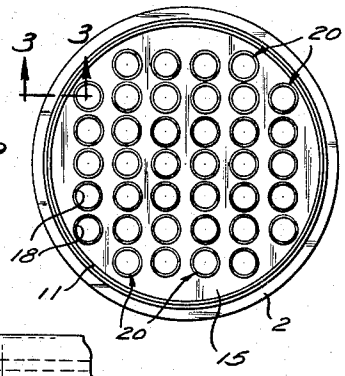

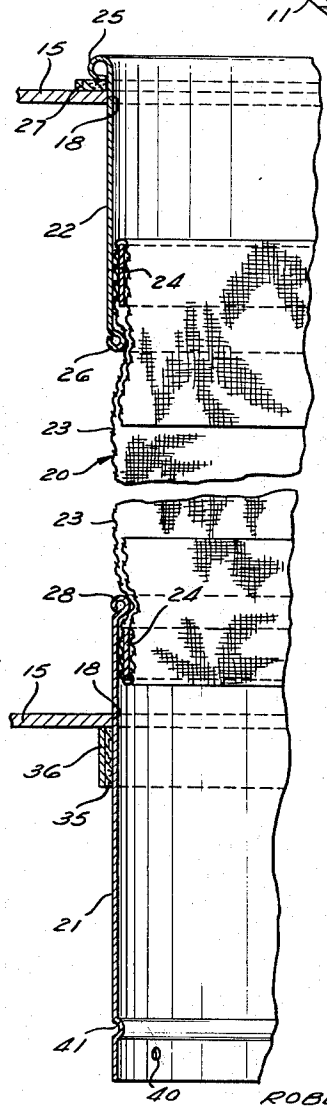

Fig. 3

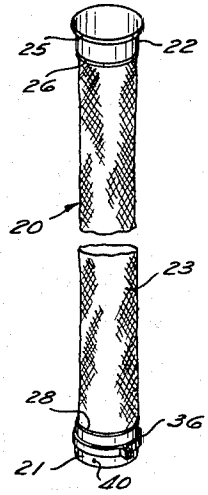

Fig. 4

INVENTOR.
ROBERT M. JENSEN
BY
WATTS & FISHER
ATTORNEYS

United States Patent Office 3,177,636 Patented Apr. 13, 1965

3,177,636

BAG HOUSE CONSTRUCTION

Robert M. Jensen, West Chester, Pa., assignor to A-S-H Industries, Inc.

Filed Mar. 19, 1962, Ser. No. 180,623
3 Claims. (Cl. 55—341)

This invention relates generally to bag house construction and is particularly concerned with new bags and new means for mounting the bags in such a bag house.

The bags in prior bag houses have been variously arranged and mounted. In certain instances, the bags were arranged in groups with an aisle space around each group to afford access to each tube so that it could be installed, repaired or replaced. Such space was required on the upper side of the lower tube sheet because the lower ends of the tubes were attached to thimbles in the lower tube sheet and were accessible only from the upper side of the sheet. The bag house costs per unit area of cloth surface varied with the amount of such aisle space.

Moreover, prior bag houses lacked means for applying substantially uniform tension to all the bags regardless of initial, usually varying, lengths and varying elasticity.

The present invention aims to avoid the foregoing disadvantages, and others inherent in prior bag mounting means, and attains that aim by the new combination of elements disclosed hereinafter and illustrated by the drawings accompanying this specification, in which:

FIG. 1 is a side elevational view, partly in section, and partly broken away, of a bag house embodying one form of this invention;

FIG. 2 is a top plan view taken on line 2—2 of FIG. 1;

FIG. 3 is a fragmentary, sectional, longitudinal view of one of the bags of FIG. 1; and

FIG. 4 is a perspective view of one of the bags of FIG. 1 assembled with its thimbles and tension clamp.

In FIG. 1, a cylindrical shell 1 is shown, preferably composed of a plurality of horizontal sections, each provided with outwardly extending flanges 2 and with the adjacent flanges being secured together in any suitable manner, for example, by bolts 3 and nuts 4. The lower end of the shell 1 is provided with a conical hopper 5 having a door controlled outlet 6.

The upper and lower end closure sections 10 and 11 are provided with manholes 14. Upper section 11 also has a gas inlet 12. The sections 10*a* and 11*a* adjacent to sections 10 and 11 are provided with gas passages 12*a* and 12*b* respectively.

Lower and upper, flat tube sheets 15 extend transversely across the interior of the shell 1 between lower sections 10 and 10*a* and upper sections 11 and 11*a* and have their edges disposed between adjacent flanges 2 and secured in place by the bolts 3 which pass through the flanges. These tube sheets partly define spaces for workmen in end closure sections 10 and 11 and partly define a space for filter bags in the shell between the tube sheets.

The upper and lower tube sheets are alike and the upper one is shown in reduced scale in FIG. 2. Both sheets are provided with openings 18 extending therethrough, as is better indicated in FIG. 3.

A plurality of filter tube assemblies 20 (FIG. 4) extend between the upper and lower tube sheets. Each tube assembly comprises lower and upper thimbles 21 and 22, a bag 23 and rings 24 sewed or otherwise secured in the ends of the bag. The bags 23 are composed of porous fabric capable of filtering aerosols out of gas and may be made of various materials which are suitable for filtering finely divided, highly heated or corrosive solids, for example, fiber glass cloth.

The upper thimbles 22 are of a size to slide down in the openings 18 in the upper tube sheet 15 and each thimble is provided with an outwardly extending portion 25 near its upper end and an inwardly extending portion 26 near its lower end. In the form illustrated, upper thimbles are cylindrical and the upper end is rolled out to form a rounded rim, and the lower end is rolled inwardly to form a rim having a smooth inner surface. The upper rim 25 is of greater diameter than the opening 18 through the tube sheet. A gasket 27 surrounds each thimble, rests on the upper surface of the upper tube sheet 15 and engages the rim 25 with dust sealing engagement.

Each lower thimble 21 is slidable up in an opening 18 of the lower tube sheet 15 and is provided with an inwardly extending portion 28 near its upper end. In the embodiment shown, the lower thimble 21 is cylindrical and its upper end is rolled inwardly to form rim 28 which has a smooth inner surface.

When a bag has been assembled with vertically aligned upper and lower thimbles, the several parts will occupy the position shown in FIG. 3. As that figure illustrates, the upper end of the bag 23 and its ring 24 are supported and retained by the inturned rim 26, even when tension is applied to the lower end of the bag. Similarly, the lower end of the bag and its ring 24 are positioned within the upper end of the lower thimble and is retained in place by the inturned rim 28.

A gasket 35 surrounds the lower thimble 21 adjacent to the underside of the lower tube sheet 15 and an annular clamp 36 presses the gasket tightly against the thimble. At its upper edge, the clamp bears against the under surface of the lower tube sheet 15 and maintains any tension applied to the bag by downward pull on the lower thimble.

The outside diameter of the thimbles is slightly less than the diameter of the openings in the tube sheets to facilitate assembly in the tube sheets while affording the minimum spaces through which dust may pass. The gaskets 27 and 35 serve to prevent the passage of fine solids through those spaces.

Each of the bags may be assembled with the tube sheets as follows.

The upper thimble 22 is slid down through gasket 26 and in opening 18 in the upper tube sheet 15 until the rim 25 bears on the gasket. A bag is then assembled with its upper thimble by being lowered through that thimble and then pressing the upper end of the bag and ring 24 down against the lower rim or shoulder 26 of the thimble. A workman standing on the upper tube sheet 15 may carry out theses operations including the pressing of the ring 24 and the surrounding bag material down against the rim 26.

A workman on the space below lower tube sheet 15 then slides lower thimble 21 up into the opening 18 in the lower tube sheet to approximately the position shown in FIG. 3. Then he reaches up through the thimble, tilts the lower end of the bag and its ring 24 so that they will pass through rim 28 and then pulls it down into the thimble. The thimble is lowered to bring the rim 28 onto the bag covering ring 24 and tension is applied to the bag in any suitable manner. A convenient way of applying such tension is by engaging a three-pronged hook (not shown) in openings 40 near the lower end of the lower thimble and attaching a weight to this hook which is heavy enough to apply a predetermined tensison to the bag. While that tension is being so applied, the clamp 36 is adjusted to the position shown in FIG. 3 and is securely fastened around the gasket 35 and thimble 21 so that when the weight and hook support are removed, the initial tension will be maintained on the bag.

The lower portion of the thimble 21 is shown as being provided with a stiffening crimp 41.

The thimbles may be constructed of various materials, for example, 16 gauge low carbon steel or other similar suitable material. The outwardly and inwardly extending projections above described may be formed in various ways, for example, by spinning, drawing, and the like.

In the embodiment illustrated in the drawings, the upper thimbles are about 11½" in outside diameter and 3" in length. The lower thimbles have substantially the same diameter but are preferably greater in length to make it possible to adjust the thimbles in the tube sheets and to apply substantially the same tension to the bags which, as manufactured, are not always of the same length or elasticity. In the form shown, the lower thimble is about 6" long.

The rings 24 may be composed of various materials but, preferably, are made of stainless steel. In the form illustrated, these rings are about ¾" long and about 0.038" in thickness. The upper end of the bag material is carried down to a position well below the lower end of the upper thimble to form a cuff, and this cuff may be of different lengths but, in the embodiment illustrated, it is about 2½" in axial length. A similar cuff is formed at the lower end of the bag.

It will be understood from the foregoing disclosure that the present invention affords numerous advantages.

No aisle space is required and, consequently, substantially the entire inner area of the shell may be supplied with bags. Access to any bag may be had from above the upper tube sheet and from below the lower tube sheet, thus avoiding the need for aisles in the area between the tube sheets.

Furthermore, each bag may be assembled and disassembled without disturbing any of the other bags, the assembly being accomplished as above described and the disassembly being accomplished by reversing the order of the assembly steps.

The assembly or disassembly of the bags may be accomplished in a very shot time and this is important in labor costs when hundreds of bags are involved. Moreover, the lengths of the bags need not be held to extremely close tolerances sand some variation is permissible in the elasticity of the bags inasmuch as both variations in length and elasticity can be compensated for by the manner of attachment of the bags to the thimbles.

While the rings 24 are shown and described as being sewed in the ends sof the bag, other suitable means of securing the rings in place may be employed.

The operation of the above described apparatus may be succinctly described as follows. Dirty gas, that is gas carrying solids, is discharged under positive pressure through passage 12 into the upper end closure section 11 and passes down inside of bags 23. A negative pressure is applied through passage 12*a* in section 10*a*. The heavier solids pass through bags 23 and collect in section 5 while the gas flows through the side walls of the bags and out through passage 12*a* in section 10*a*, the fine solids being retained on the inner surfaces of the bags.

Having thus described this invention in such full, clear, concise and exact terms as to enable any person skilled in the art to which it pertains to make and use the same, and having set forth the best mode contemplated of carrying out this invention, I state that the subject matter which I regard as being my invention is particularly pointed out and distinctly claimed in what is claimed, it being understood that equivalents or modifications of, or substitutions for, parts of the above specifically described embodiment of the invention may be made without departing from the scope of the invention as set forth in what is claimed.

What is claimed is:

1. In a bag house for filtering aerosols out of highly heated gas, the combination of:

(*a*) a vertical shell having lower and upper end closure sections, lower and upper flat tube sheets having openings therethrough and secured to the shell adjacent to said end closure sections and positioned to partly define in each said sections working spaces for workmen, said sheets partly defining therebetween in said shell a filter chamber,

(*b*) each end closure section having a manhole to provide access of workmen to said working spaces, one of said end closure sections having a gas inlet and the shell having a gas outlet from said filter chamber,

(*c*) upper cylindrical thimbles movable endwise in the upper tube sheet and having outwardly extending projections near their upper ends to limit the extent of downward movement of the upper thimbles in the upper sheet, and inwardly extending projections near their lower ends,

(*d*) lower cylindrical thimbles movable endwise in the lower tube sheet and having annular inwardly extending projections near their upper ends,

(*e*) tubes of porous filter fabric extending into said upper and lower thimbles and having axially short annuli enclosed in the ends thereof, the upper annuli-carrying portions of the tubes engaging the upper surface of said inwardly extending projections of the upper thimbles and the lower surface of the projections in the lower thimbles surrounding and engaging the annuli-carrying lower end portions of the tubes, said tubes occupying substantially the entire area of the shell between said tube sheets,

(*f*) and means below and engaging the lower tube sheet and gripping the lower thimbles for maintaining substantially constant tension initially applied to the tubes,

(*g*) the tubes being assemblable with and disassemblable from the thimbles by workmen stationed above the upper tube sheet and below the lower tube sheet, thereby avoiding the need for aisle space for workmen between the upper and lower tube sheets.

2. The combination of elements set forth in claim 1 in which the shell is composed of a plurality of metal sections positioned one above another, and the upper tube sheet is secured between two adjacent sections near the top of the shell and the lower tube sheet is secured between two adjacent sections near the bottom of the shell and gaskets disposed around the upper thimbles above the upper tube sheet and around the thimbles below the lower tube sheet and serving to prevent escape of gas from the space between the tube sheets.

3. The combination of elements set forth in claim 1 in which the upper and lower tube sheets partly define a space for the filter tubes and in which the shell has passages for flow of gases into and out of said space and in which the short annuli in the ends of the tubes are axially short metal rings.

References Cited by the Examiner

UNITED STATES PATENTS

2,035,400	3/36	Paine	55—341
2,335,315	11/43	Seymour	55—341
2,751,042	6/56	Sylvan.	

FOREIGN PATENTS

442,863	6/12	France.

HARRY B. THORNTON, *Primary Examiner.*

HERBERT L. MARTIN, *Examiner.*