(12) INTERNATIONAL APPLICATION PUBLISHED UNDER THE PATENT COOPERATION TREATY (PCT)

(19) World Intellectual Property Organization
International Bureau

(43) International Publication Date
5 May 2011 (05.05.2011)

PCT

(10) International Publication Number
WO 2011/050845 A1

(51) International Patent Classification:
H01Q 1/24 (2006.01) *H01Q 9/04* (2006.01)
H01Q 5/00 (2006.01) *H01Q 21/28* (2006.01)

(21) International Application Number:
PCT/EP2009/064280

(22) International Filing Date:
29 October 2009 (29.10.2009)

(25) Filing Language: English

(26) Publication Language: English

(71) Applicant *(for all designated States except US)*: **LAIRD TECHNOLOGIES AB** [SE/SE]; Box 1146, S-SE-164 22 Kista (SE).

(72) Inventors; and
(75) Inventors/Applicants *(for US only)*: **ARBIN, Axel von** [SE/SE]; Bryggvägen 7, S-SE-183 63 Täby (SE). **MEIER, Teresa** [AT/SE]; Laird Technologies AB, Box 1146, S-SE-164 22 Kista (SE).

(74) Agents: **ROMEDAHL, Bengt** et al.; Kransell & Wennborg KB, P.O. Box 27834, S-11593 Stockholm (SE).

(81) Designated States *(unless otherwise indicated, for every kind of national protection available)*: AE, AG, AL, AM, AO, AT, AU, AZ, BA, BB, BG, BH, BR, BW, BY, BZ, CA, CH, CL, CN, CO, CR, CU, CZ, DE, DK, DM, DO, DZ, EC, EE, EG, ES, FI, GB, GD, GE, GH, GM, GT, HN, HR, HU, ID, IL, IN, IS, JP, KE, KG, KM, KN, KP, KR, KZ, LA, LC, LK, LR, LS, LT, LU, LY, MA, MD, ME, MG, MK, MN, MW, MX, MY, MZ, NA, NG, NI, NO, NZ, OM, PE, PG, PH, PL, PT, RO, RS, RU, SC, SD, SE, SG, SK, SL, SM, ST, SV, SY, TJ, TM, TN, TR, TT, TZ, UA, UG, US, UZ, VC, VN, ZA, ZM, ZW.

(84) Designated States *(unless otherwise indicated, for every kind of regional protection available)*: ARIPO (BW, GH, GM, KE, LS, MW, MZ, NA, SD, SL, SZ, TZ, UG, ZM, ZW), Eurasian (AM, AZ, BY, KG, KZ, MD, RU, TJ, TM), European (AT, BE, BG, CH, CY, CZ, DE, DK, EE, ES, FI, FR, GB, GR, HR, HU, IE, IS, IT, LT, LU, LV, MC, MK, MT, NL, NO, PL, PT, RO, SE, SI, SK, SM, TR), OAPI (BF, BJ, CF, CG, CI, CM, GA, GN, GQ, GW, ML, MR, NE, SN, TD, TG).

Published:
— *with international search report (Art. 21(3))*

(54) **Title**: A METAL COVER FOR A RADIO COMMUNICATION DEVICE

(57) **Abstract**: The present invention relates to a metal cover for a radio communication device. The metal cover comprisesa front side part (5), a first back side part (4) connected to the front side part (5) through a top side part (6), a second back side part (7) connected to the front side part (5) through a bottom side part (8), wherein the bottom and top side parts (6,8) are positioned at opposite ends of the front side part (5), and the first and second back side parts (4,7) are positioned coplanar and distanced from each other by a gap.

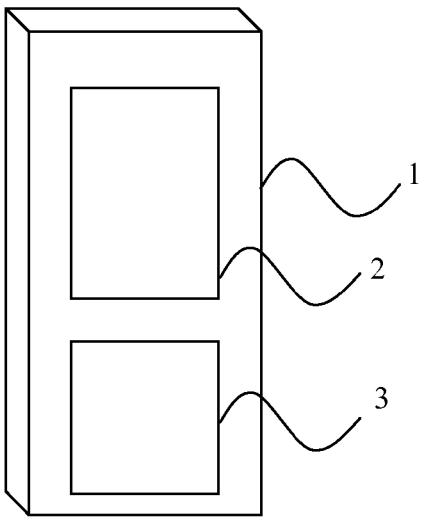

FIG. 1

WO 2011/050845 A1

A METAL COVER FOR A RADIO COMMUNICATION DEVICE

FIELD OF INVENTION

The present invention relates generally to covers for radio communication devices, and particularly to metal covers for radio communication devices.

BACKGROUND

A current trend for portable radio communication devices, such as mobile phones, PDA, portable computers and similar devices, is to provide the device with a metal cover. A metal cover for a portable radio communication device makes it difficult to provide the device with a non-protruding antenna, as the metal cover shields the inner of the device for radio frequencies. It is possible to only partly provide the cover as a metal cover, to allow the use of a built in antenna, but it would be desirable to provide a full metal cover.

Another trend for portable radio communication devices, such as mobile phones and similar devices, is to provide the device with a very broadband coverage, covering e.g. GSM850, GSM900, GSM1800, GSM1900, UMTS 2100 MHz, GPS, BT and WLAN 2.4 GHz. This puts further restrictions on the design of an antenna for a portable radio communication device.

SUMMARY OF THE INVENTION

An object of the present invention is to provide a metal cover for a radio communication device, still allowing a non-protruding antenna.

This object, among others, is according to the present invention attained by a metal cover and a radio

communication device, respectively, as defined by the appended claims.

By providing a metal cover for a radio communication device, comprising a front side part, a first back side part connected to the front side part through a top side part, a second back side part connected to the front side part through a bottom side part, wherein the top and bottom side parts are positioned on opposite sides of the front side part, and the first and second back side parts are positioned coplanar and distanced from each other by a gap of preferably at least 0.5 mm, a full metal cover having a non-protruding antenna can be provided.

By preferably having a feed point and a ground point positioned at the gap of the first back side part, providing a broad high-frequency band is facilitated. The feed point and ground point are further preferably positioned at opposite corners of the first back side part, to further facilitate providing the broad high-frequency band.

The second back side part is advantageously provided with a feed point at the gap, preferably at a corner opposite the feed point of the first back side part, to facilitate providing a broad low-frequency band.

To broaden the high and low frequency bands, the first and second back side parts preferably comprises edge portions folded down towards the front side part.

Although the present invention is particularly useful for portable radio communication devices, it is also applicable to fixed radio communication devices such as base stations.

Further features and advantages of the present invention will be evident from the following description.

BRIEF DESCRIPTION OF THE DRAWINGS

The present invention will become more fully understood from the detailed description of embodiments given below and the accompanying figures, which are given by way of illustration only, and thus, are not limitative of the present invention, wherein:

Fig. 1 schematically shows a front side of a metal cover for a mobile phone.

Fig. 2 schematically shows a back side of a metal cover for a mobile phone according to a first embodiment of the present invention.

Fig. 3 schematically shows a side view from the left of a variant of the metal cover shown in Fig. 2.

Fig. 4 schematically shows a side view from the right of a variant of the metal cover shown in Fig. 2.

Fig. 5 schematically shows a back side of a metal cover for a mobile phone according to a second embodiment of the present invention.

DETAILED DESCRIPTION OF EMBODIMENTS

In the following description, for purpose of explanation and not limitation, specific details are set forth, such as particular techniques and applications in order to provide a thorough understanding of the present invention. However, it will be apparent for a person skilled in the art that the present invention may be practiced in other embodiments that depart from these specific details. In other instances, detailed description of well-known methods and apparatuses are omitted so as not to obscure the description of the present invention with unnecessary details.

A portable radio communication device comprising a metal cover according to a first embodiment of the present invention will now be described with reference to Figs. 1 and 2.

The portable radio communication device, such as a mobile phone, has a sheet metal cover 1, a display 2 mounted in a front side of the sheet metal cover 1, and a key pad 3 also mounted in the front side of the sheet metal cover 1, as illustrated in Fig. 1. Components for operation of the portable radio communication device is as usually provided within its housing, i.e. in this case within the sheet metal cover 1. The display 2 and key pad 3 is alternatively replaced by a preferably larger touch screen occupying a major part of the front side of the sheet metal cover 1.

The back side of the metal cover 1 is divided into two parts. A first back side part 4 is connected to the front side part 5 of the metal cover through a top side part 6. A second back side part 7 is connected to the front side part 5 of the metal cover through a bottom side part 8. The first back side part 4 and the second back side part 7 are coplanar and distanced from each other by a gap of about 2-5 mm.

The first back side part 4 is driven as a multi-band antenna element by being fed at a feed point 9 at a corner near the gap against the second back side part 7, by being grounded at a ground point 10 at an opposite corner near the gap against the second back side part, and by being grounded along the top side part 6. For a mobile phone, and thus its metal cover, having a length of about 110 mm, a width of about 50 mm, and a thickness of about 9 mm, a frequency band coverage of about 1550-2500 MHz is achievable. The first back side part 4 has a generally rectangular shape having a

length of about 33 mm and a width of about 50 mm, in this example.

The second back side part 7 is driven as an antenna element by being fed at a feed point 11 at a corner near the gap against the first back side part 4, and by being grounded along the bottom side part 8. For a mobile phone, and thus its metal cover, having a length of about 110 mm, a width of about 50 mm, and a thickness of about 9 mm, a frequency band coverage of about 750-1050 MHz is achievable. The second back side part 7 has a generally rectangular shape having a length of about 72 mm and a width of about 50 mm, in this example.

The first and second back side parts are functioning as radiating elements over a ground plane, i.e. over the front side part. In this way a robust antenna is achieved by the first and second back side parts, respectively, are connected to the front side through a large grounding means, i.e. the top and bottom side parts, respectively. A display device and/or a key pad are typically provided with grounded shielding means between the inner of the radio communication device and the display device and/or the key pad. The grounded shielding means then form part of the front side part. Further, in a mobile phone e.g. having a touch screen occupying essentially the whole front thereof, the front side part of the metal cover will then be made up by the shielding means of the touch screen.

The first and second back side parts have been described as having feed points 9 and 11. Feeding of the feed points 9 and 11 is advantageously provided as two separate feedings to RF circuitry, to improve isolation there between, but the feeding of the feed points 9 and 11 could alternatively be

provided as a common feeding having filtering means to separate signaling to and from RF circuitry.

The second back side part 7 preferably covers the whole battery of a mobile phone. The second back side part is preferably pivotable around and/or detachably attached to the bottom side part to facilitate access into the mobile phone for e.g. changing battery or for changing a SIM of the mobile phone.

The top and bottom side parts have been illustrated as parts covering the top and bottom side, respectively, of the portable radio communication device, but can alternatively comprise a plurality of grounding portions together not covering the top or bottom side, respectively.

For improved antenna function the metal cover is preferably made up by or metalized by a good conductive material.

For tuning of the antenna made up by the metal cover 1 additional grounding is preferably added at the sides of the portable radio communication device. In Fig. 3 a wide grounding 15 to ground point 10 as well as a wide grounding 14 of the second back side part is illustrated. I Fig. 4 an additional wide grounding 18 of the first back side part is illustrated, and also feeding 16 to feed point 8 and feeding 17 to feed point 11 are illustrated.

Although the first back side part has been described as generating the high frequency band and the second back side part has been describe as generating the low frequency band, the opposite is also possible. Also, either the first or the second back side part could generate both low and high frequency bands.

A portable radio communication device according to a second embodiment of the present invention will next be described with reference to Fig. 5. This second embodiment of the present invention is similar to the first embodiment described above apart from that the first and second back side parts comprises folded side edge portions extending towards the front side part, extending about 6 mm and thus leaving a gap of about 3 mm to the front side part. Although the folded side edge portions have been illustrated as covering the whole first and second back side parts, it is also possible to only have portions of the first and second back side part edges folded towards the front side part.

It will be obvious that the present invention may be varied in a plurality of ways. Such variations are not to be regarded as departure from the scope of the present invention. All such variations as would be obvious for a person skilled in the art are intended to be included within the scope of the present invention as defined by the appended claims.

CLAIMS

1. A metal cover for a radio communication device, **characterized in** that said metal cover comprises

a front side part (5),

a first back side part (4) connected to said front side part through a top side part (6),

a second back side part (7) connected to said front side part through a bottom side part (8),

wherein said bottom and top side parts are positioned at opposite ends of said front side part, and said first and second back side parts are positioned coplanar and distanced from each other by a gap.

2. The metal cover according to claim 1, wherein said first back side part comprises a feed point (9) and a ground point (10) positioned at the gap.

3. The metal cover according to claim 2, wherein said feed point is positioned at a corner at said gap and said ground point is positioned at a corner at said gap, opposite said corner at which said feed point is positioned.

4. The metal cover according to claim 2 or 3, wherein said first back side part comprises a second ground point.

5. The metal cover according to any of claims 1-4, wherein said second back side part comprises a feed point (11) positioned at the gap.

6. The metal cover according to claim 5, wherein said feed point is positioned at a corner at said gap.

7. The metal cover according to claim 6, wherein said feed point of said second back side part is positioned adjacent said feed point of said first back side part.

8. The metal cover according to any of claims 1-7, wherein said second back side part comprises a ground point.

9. The metal cover according to any of claims 1-8, wherein said first and second back side parts comprises edge portions (12, 13) folded towards said front side part.

10. The metal cover according to any of claims 1-9, wherein said first back side part is configured to cover GSM1800, GSM1900, UMTS 2100 MHz, GPS, BT and WLAN 2.4 GHz.

11. The metal cover according to claim 10, wherein said first back side part is configured to also cover GSM850 and GSM900.

12. The metal cover according to any of claims 1-11, wherein said second back side part is configured to cover GSM850 and GSM900.

13. The metal cover according to claim 12, wherein said second back side part is configured to also cover GSM1800, GSM1900, UMTS 2100 MHz, GPS, BT and WLAN 2.4 GHz.

14. The metal cover according to any of claims 1-13, wherein said first back side part is instead connected to said front side part through said bottom side part, and said second back side part is instead connected to said front side part through said top side part.

15. The metal cover according to any of claims 1-14, wherein said front side part comprises grounded shielding means of a display device of said radio communication device.

16. The metal cover according to any of claims 1-15, wherein said front side part comprises ground plane means of said radio communication device.

17. The metal cover according to any of claims 1-16, wherein said radio communication device is portable.

18. A radio communication device comprising a metal cover according to any previous claim.

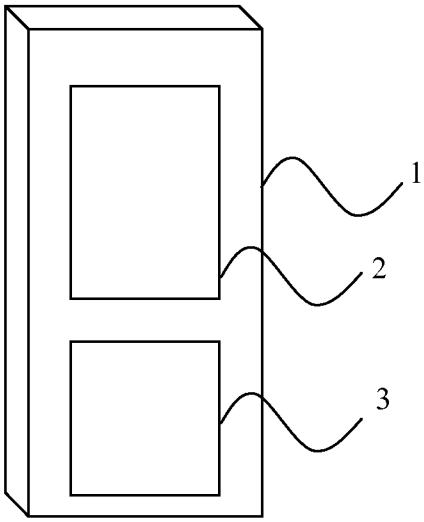

FIG. 1

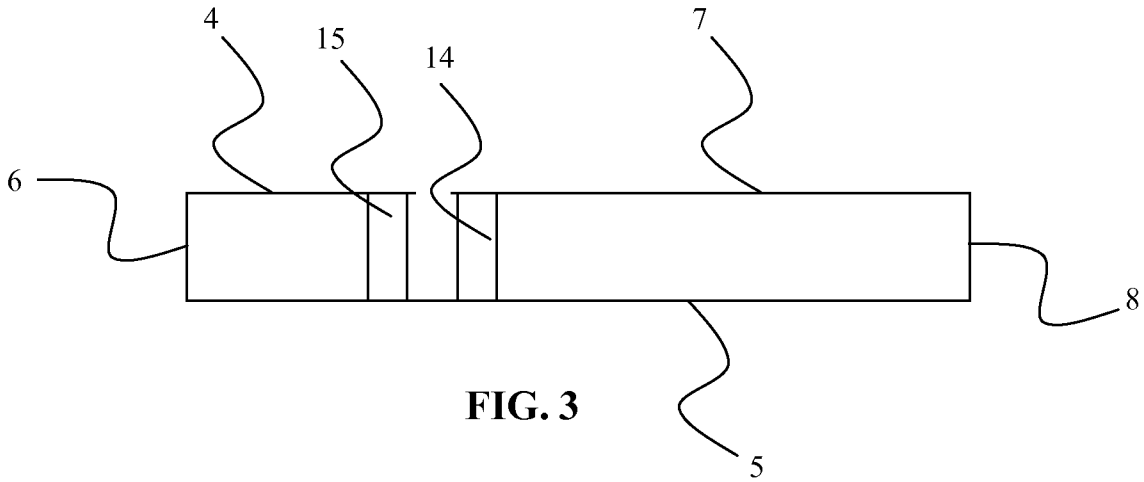

FIG. 3

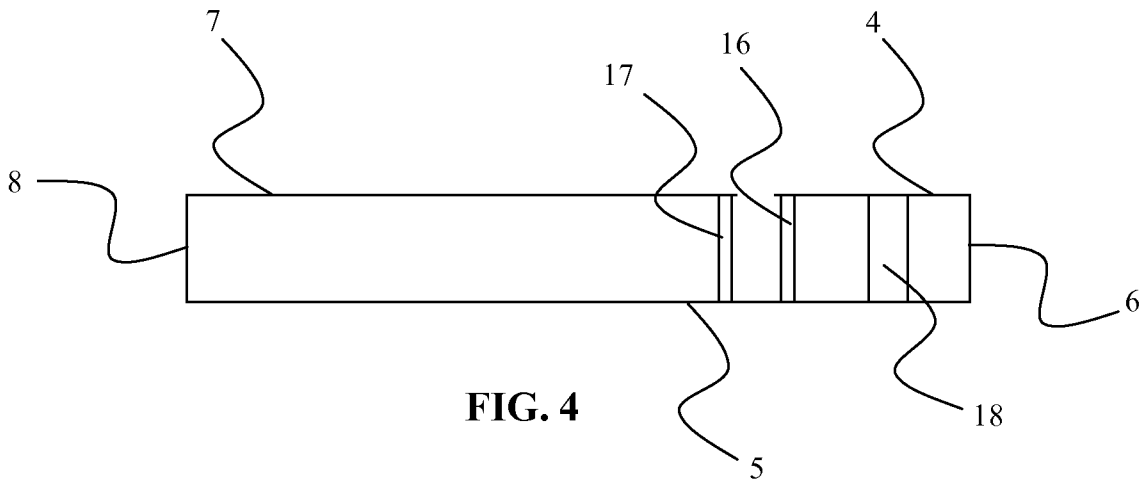

FIG. 4

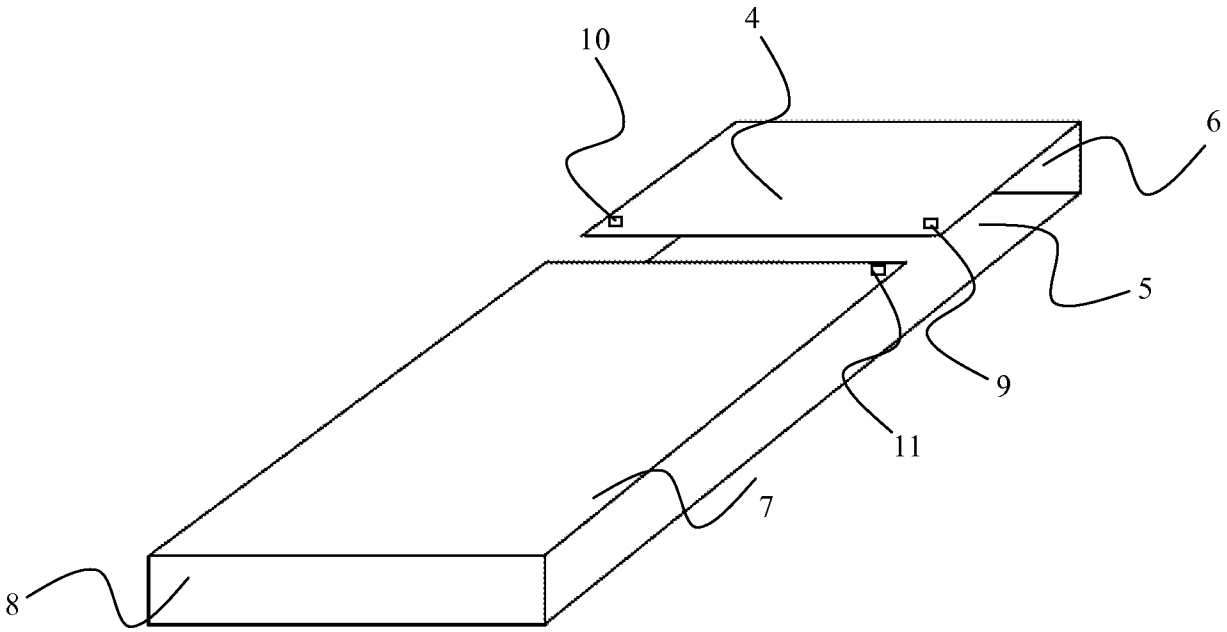

FIG. 2

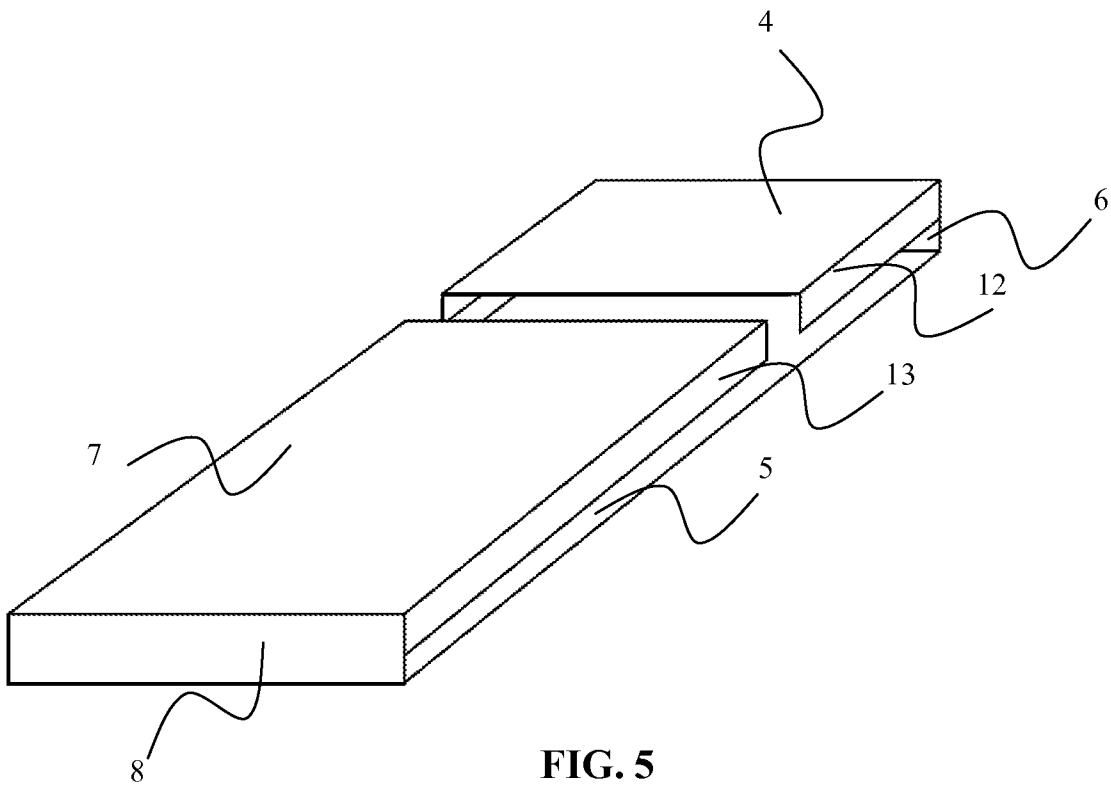

FIG. 5

INTERNATIONAL SEARCH REPORT

International application No
PCT/EP2009/064280

A. CLASSIFICATION OF SUBJECT MATTER
INV. H01Q1/24 H01Q5/00 H01Q9/04 H01Q21/28

According to International Patent Classification (IPC) or to both national classification and IPC

B. FIELDS SEARCHED

Minimum documentation searched (classification system followed by classification symbols)
H01Q

Documentation searched other than minimum documentation to the extent that such documents are included in the fields searched

Electronic data base consulted during the international search (name of data base and, where practical, search terms used)
EPO-Internal, WPI Data

C. DOCUMENTS CONSIDERED TO BE RELEVANT

Category*	Citation of document, with indication, where appropriate, of the relevant passages	Relevant to claim No.
X	GB 2 392 563 A (MOTOROLA INC [US]) 3 March 2004 (2004-03-03) pages 8-10; figures 3-4	1-18
X	US 2008/316115 A1 (HILL ROBERT J [US] ET AL) 25 December 2008 (2008-12-25) pages 3-6; figures 1,3,4,19	1-18
A	US 2008/018541 A1 (PANG HAWK YIN [JP] ET AL) 24 January 2008 (2008-01-24) column 0038, paragraph 1 - column 0041; figure 1	1-18
A	US 2002/140612 A1 (KADAMBI GOVIND R [US] ET AL) 3 October 2002 (2002-10-03) pages 3-4; figures 1A-1C	1-18

☐ Further documents are listed in the continuation of Box C.

☒ See patent family annex.

* Special categories of cited documents :

"A" document defining the general state of the art which is not considered to be of particular relevance

"E" earlier document but published on or after the international filing date

"L" document which may throw doubts on priority claim(s) or which is cited to establish the publication date of another citation or other special reason (as specified)

"O" document referring to an oral disclosure, use, exhibition or other means

"P" document published prior to the international filing date but later than the priority date claimed

"T" later document published after the international filing date or priority date and not in conflict with the application but cited to understand the principle or theory underlying the invention

"X" document of particular relevance; the claimed invention cannot be considered novel or cannot be considered to involve an inventive step when the document is taken alone

"Y" document of particular relevance; the claimed invention cannot be considered to involve an inventive step when the document is combined with one or more other such documents, such combination being obvious to a person skilled in the art.

"&" document member of the same patent family

Date of the actual completion of the international search	Date of mailing of the international search report
29 January 2010	05/02/2010

Name and mailing address of the ISA/	Authorized officer
European Patent Office, P.B. 5818 Patentlaan 2 NL - 2280 HV Rijswijk Tel. (+31-70) 340-2040, Fax: (+31-70) 340-3016	Ribbe, Jonas

1

INTERNATIONAL SEARCH REPORT

Information on patent family members

International application No
PCT/EP2009/064280

Patent document cited in search report	Publication date	Patent family member(s)	Publication date
GB 2392563 A	03-03-2004	AT 366999 T	15-08-2007
		AU 2003268950 A1	19-03-2004
		DE 60314888 T2	08-05-2008
		WO 2004021510 A1	11-03-2004
		EP 1537623 A1	08-06-2005
		US 2005200535 A1	15-09-2005
US 2008316115 A1	25-12-2008	AU 2008269045 A1	31-12-2008
		US 2010007564 A1	14-01-2010
		WO 2009002575 A2	31-12-2008
US 2008018541 A1	24-01-2008	NONE	
US 2002140612 A1	03-10-2002	NONE	