US 20200001832A1

(19) United States

(12) Patent Application Publication (10) Pub. No.: US 2020/0001832 A1

Deane et al. (43) Pub. Date: Jan. 2, 2020

(54) **SYSTEMS AND METHODS FOR PERCEPTION SURFACE CLEANING, DRYING, AND/OR THERMAL MANAGEMENT WITH MANIFOLDS**

(71) Applicant: **SEEVA Technologies, Inc.**, Bellevue, WA (US)

(72) Inventors: **Geoffrey F. Deane**, Bellevue, WA (US); **Jere R. Lansinger**, Camano Island, WA (US); **Derrick Redding**, Ann Arbor, MI (US); **Karen Harban**, Seattle, WA (US); **Varun Rupchandani**, Seattle, WA (US); **Ian Walp**, Seattle, WA (US); **Karthik Unnikrishnan**, Seattle, WA (US); **Hrishikesh Pathak**, Seattle, WA (US); **Nishant Hingne**, Redmond, WA (US); **Diane Lansinger**, Bellevue, WA (US)

(21) Appl. No.: **16/455,716**

(22) Filed: **Jun. 27, 2019**

Related U.S. Application Data

(60) Provisional application No. 62/690,350, filed on Jun. 27, 2018, provisional application No. 62/717,583, filed on Aug. 10, 2018, provisional application No. 62/731,004, filed on Sep. 13, 2018, now abandoned, provisional application No. 62/917,825, filed on Jan. 4, 2019.

Publication Classification

(51) **Int. Cl.**

B60S 1/48	(2006.01)
B60S 1/56	(2006.01)
B08B 3/10	(2006.01)

(52) **U.S. Cl.**

CPC ***B60S 1/488*** (2013.01); ***B08B 3/10*** (2013.01); ***B60S 1/56*** (2013.01)

(57) **ABSTRACT**

Systems and methods for cleaning, drying, and thermally managing vehicle components are described herein. In some embodiments, the vehicle components can include various sensors and, more particularly, the surfaces of cameras, LIDAR sensors, etc., that need to be clean to effectively perceive the environment around the vehicle. In one embodiment, a cleaning system includes a central delivery system configured to route fluid, such as washer fluid, along one or more delivery channels to remote holding chambers. The holding chambers can hold and/or heat the fluid before delivering the fluid to nozzles that spray the fluid on nearby vehicle components to clean the components.

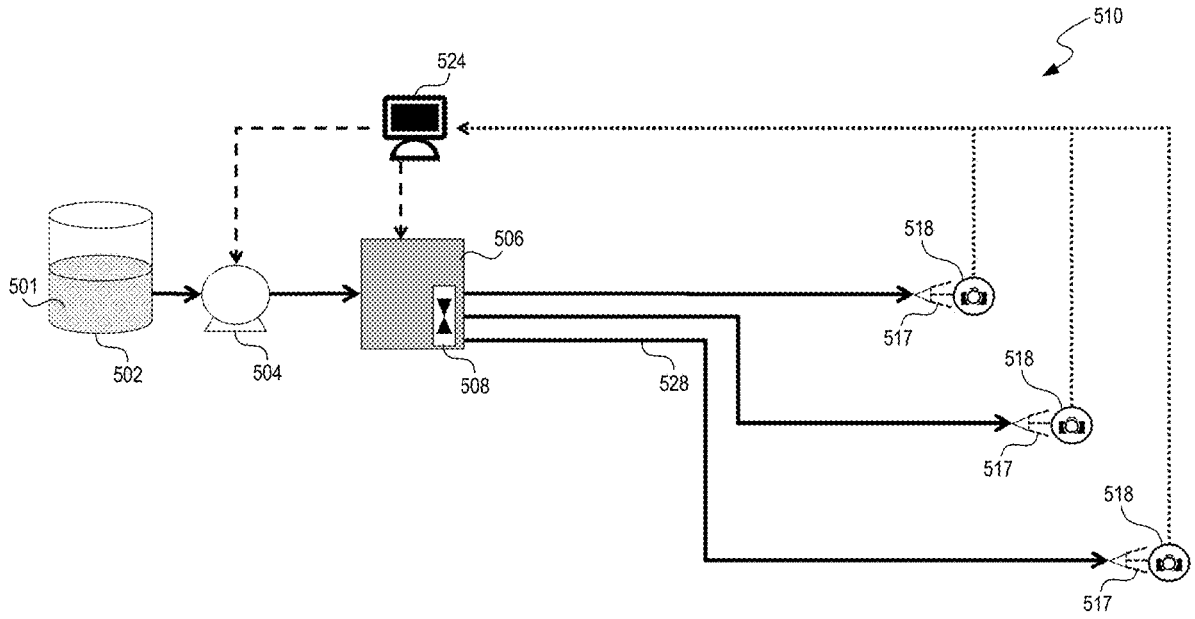

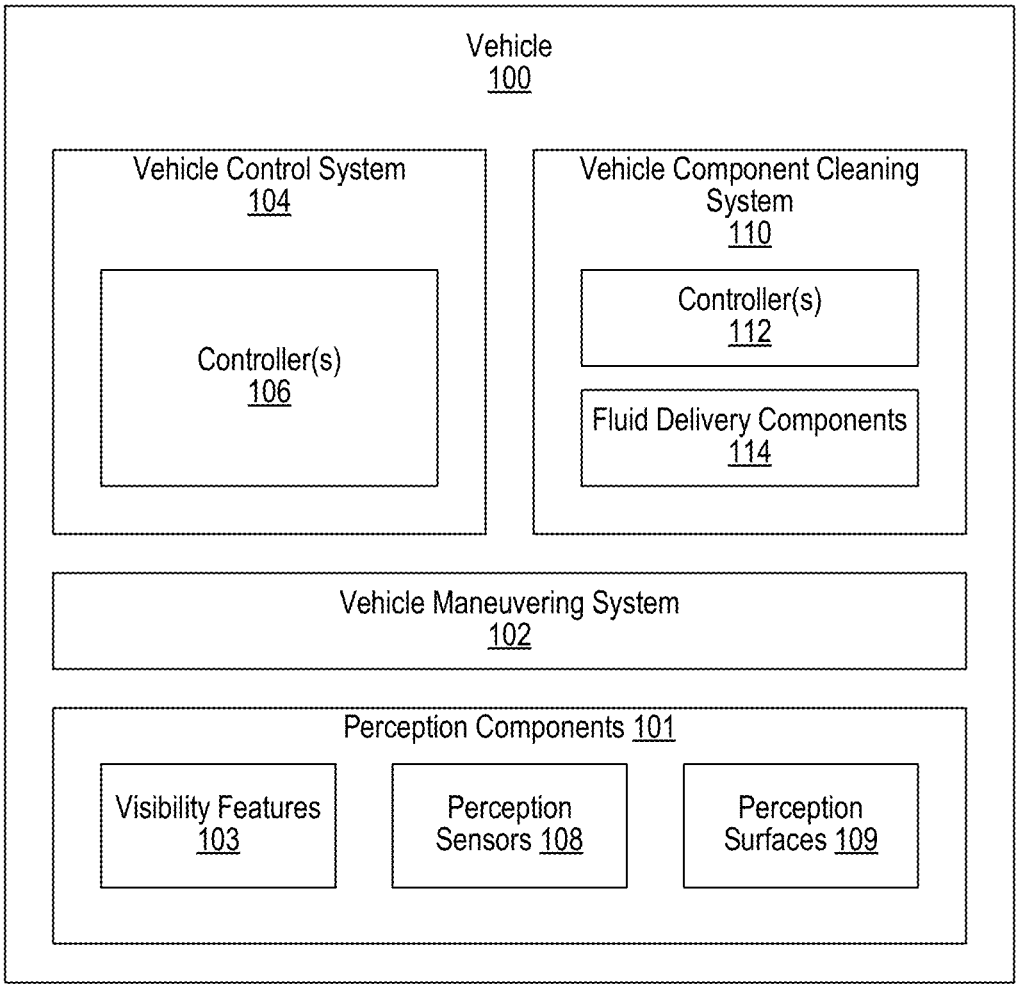
Vehicle
100
Vehicle Control System
104
Controller(s)
106
Vehicle Component Cleaning System
110
Controller(s)
112
Fluid Delivery Components
114
Vehicle Maneuvering System
102
Perception Components 101
Visibility Features
103
Perception Sensors 108
Perception Surfaces 109

FIG. 1

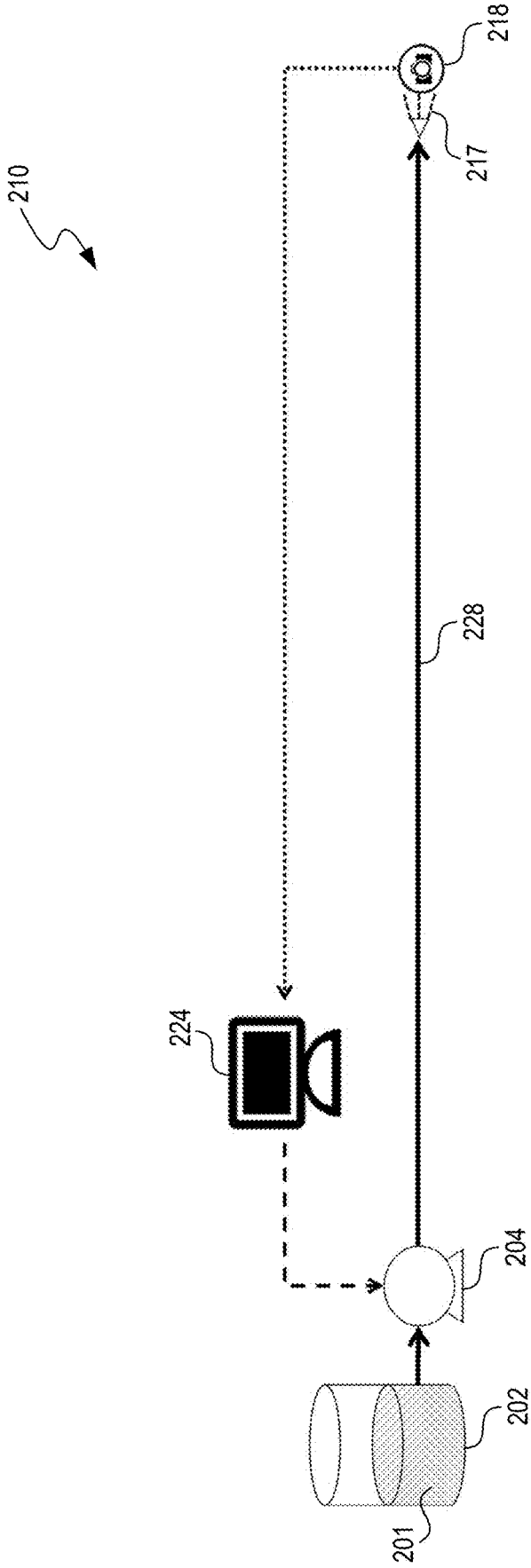

FIG. 2

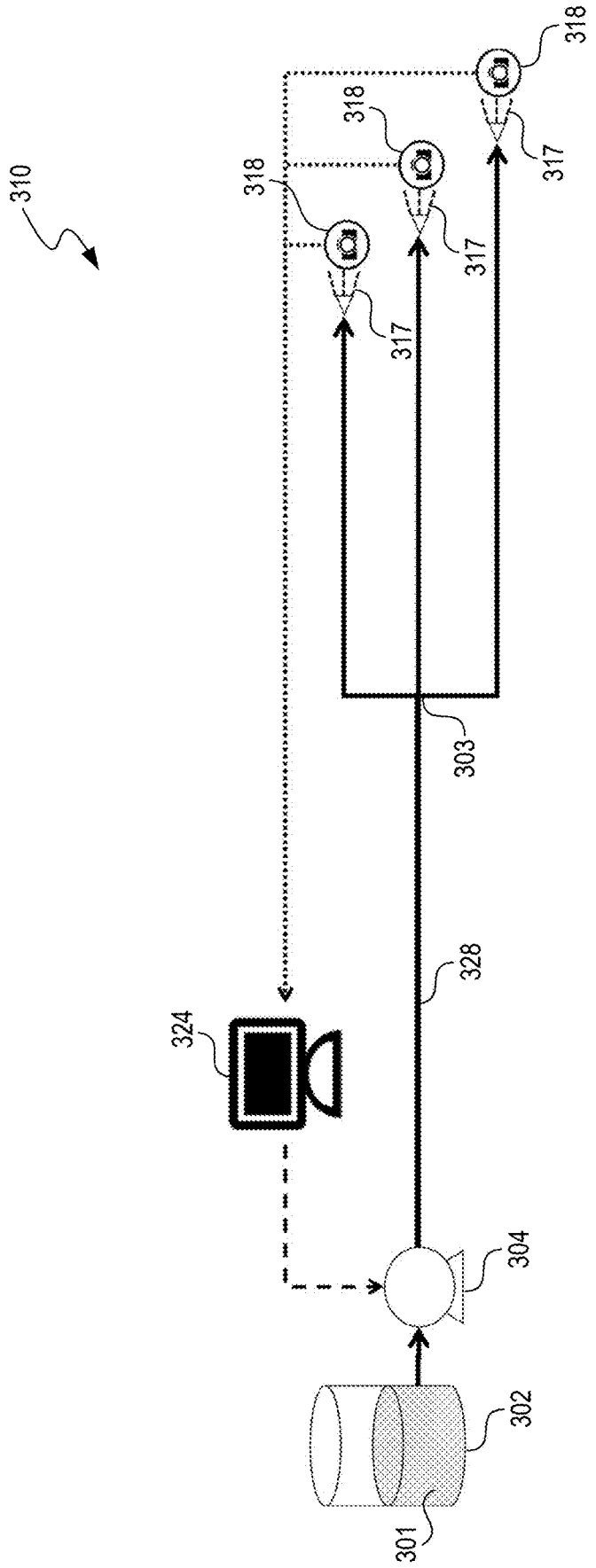

FIG. 3

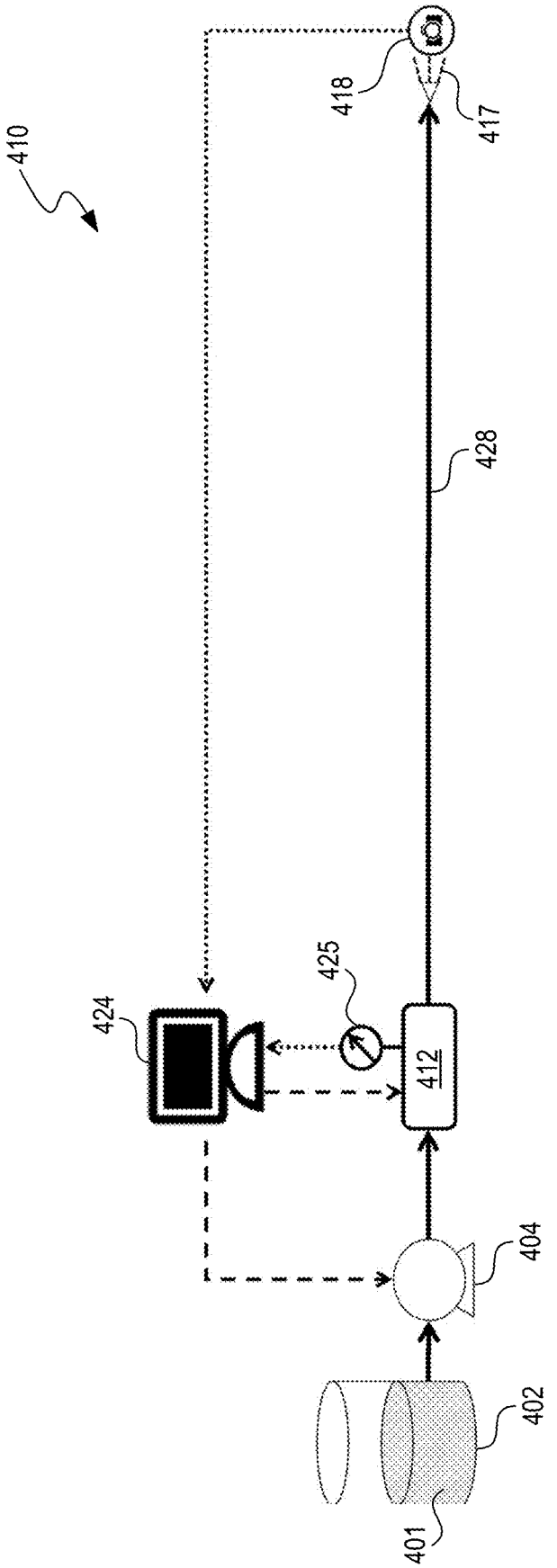

FIG. 4

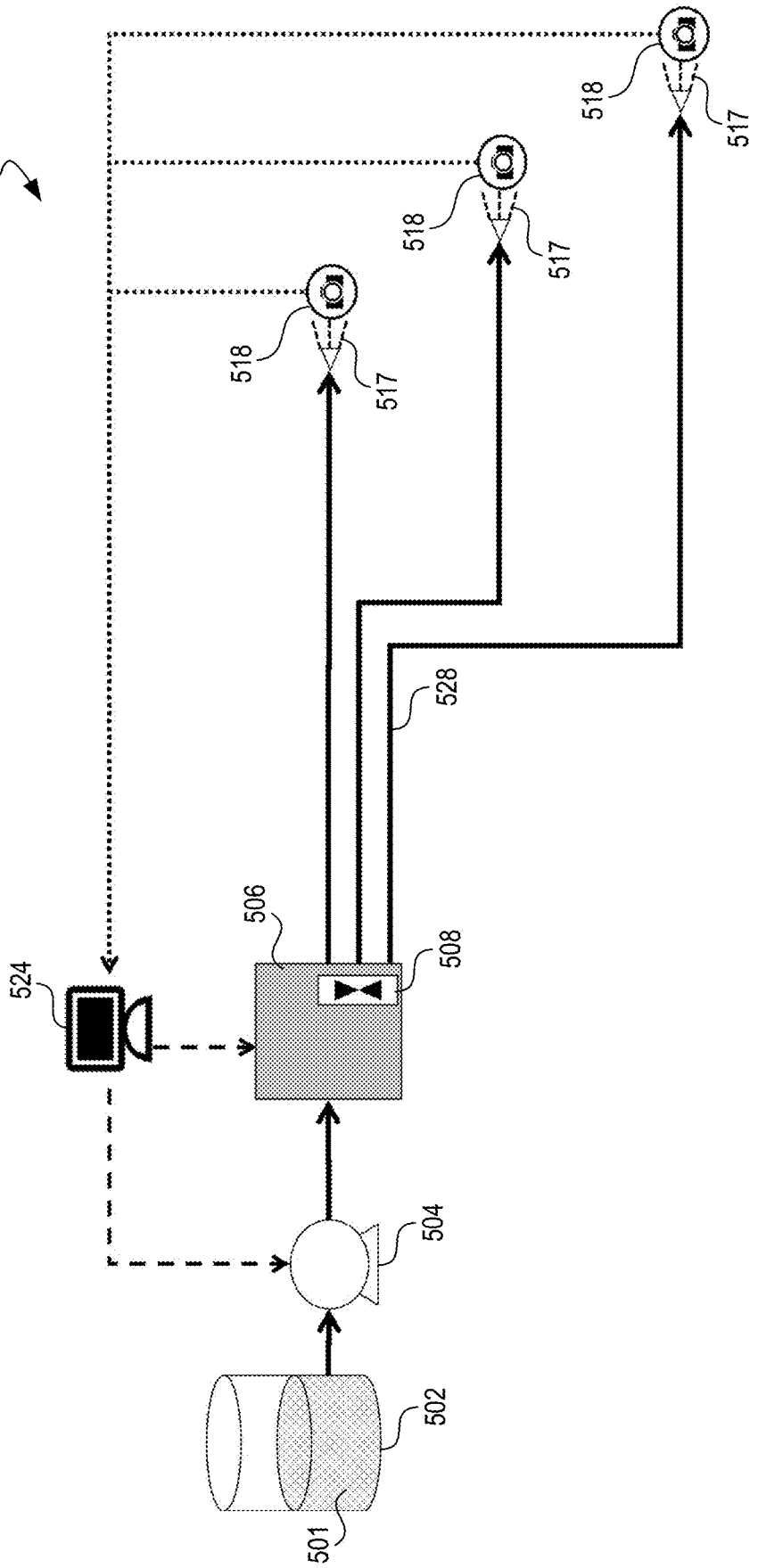

FIG. 5

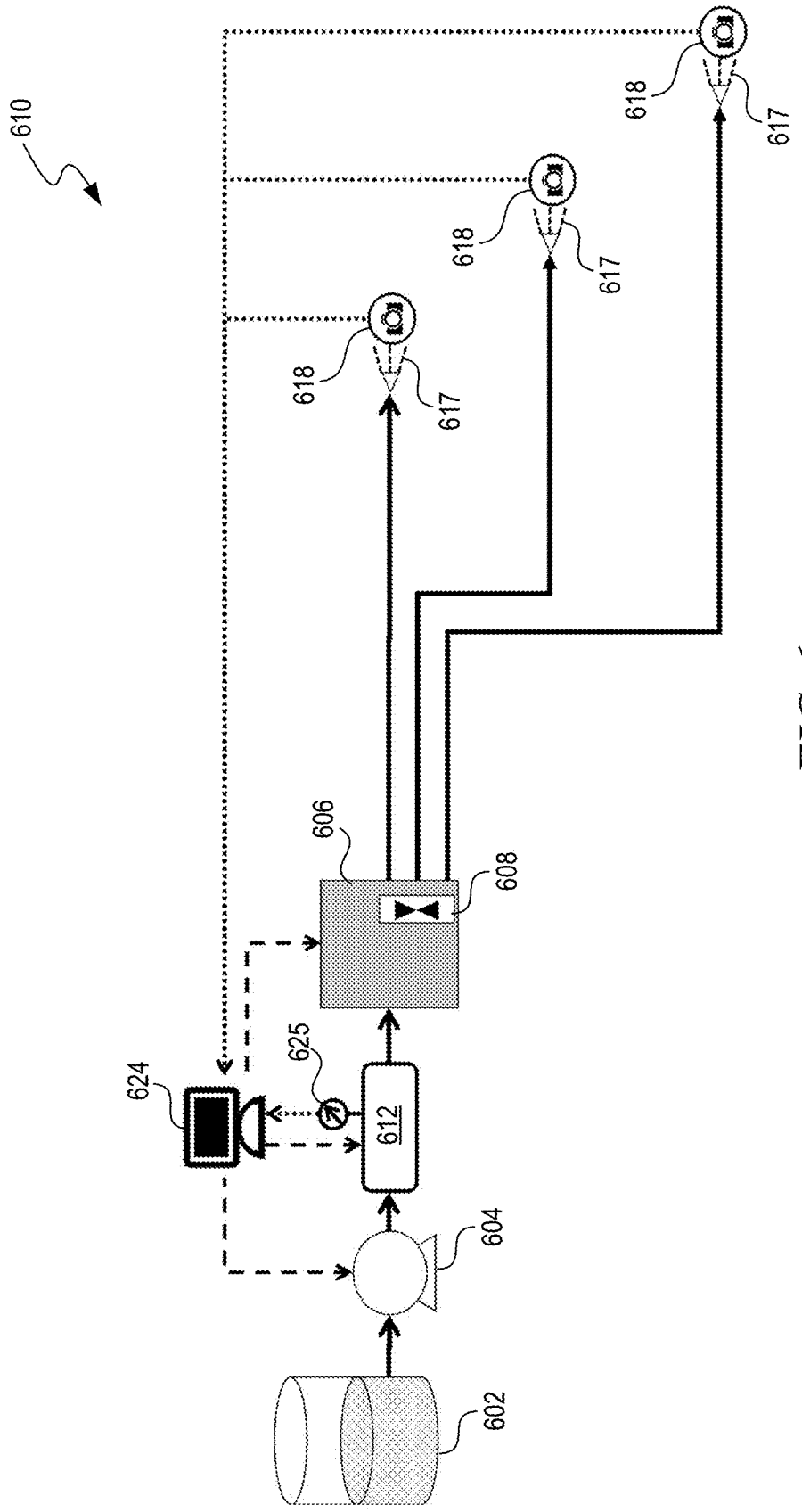

FIG. 6

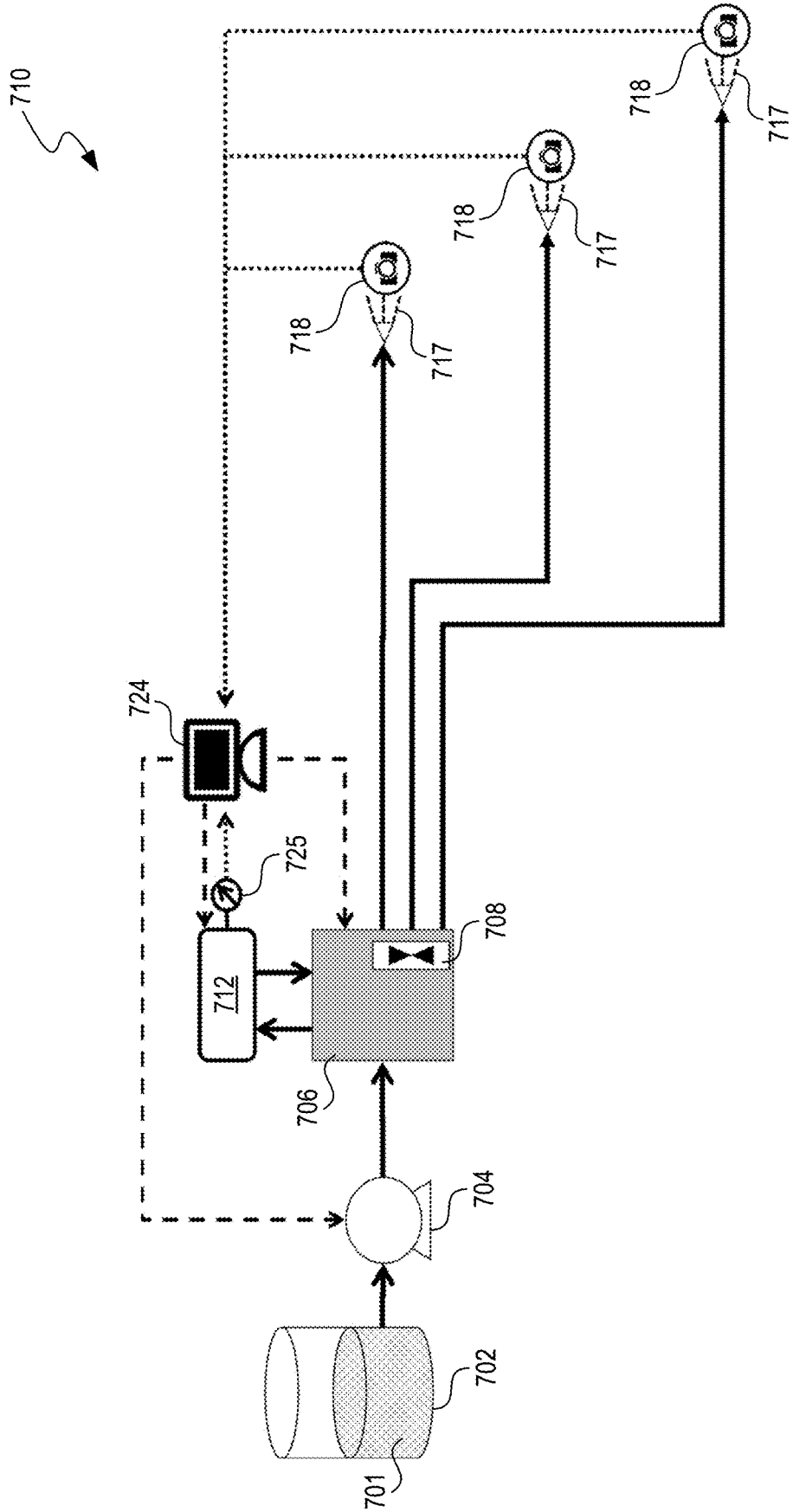

FIG. 7

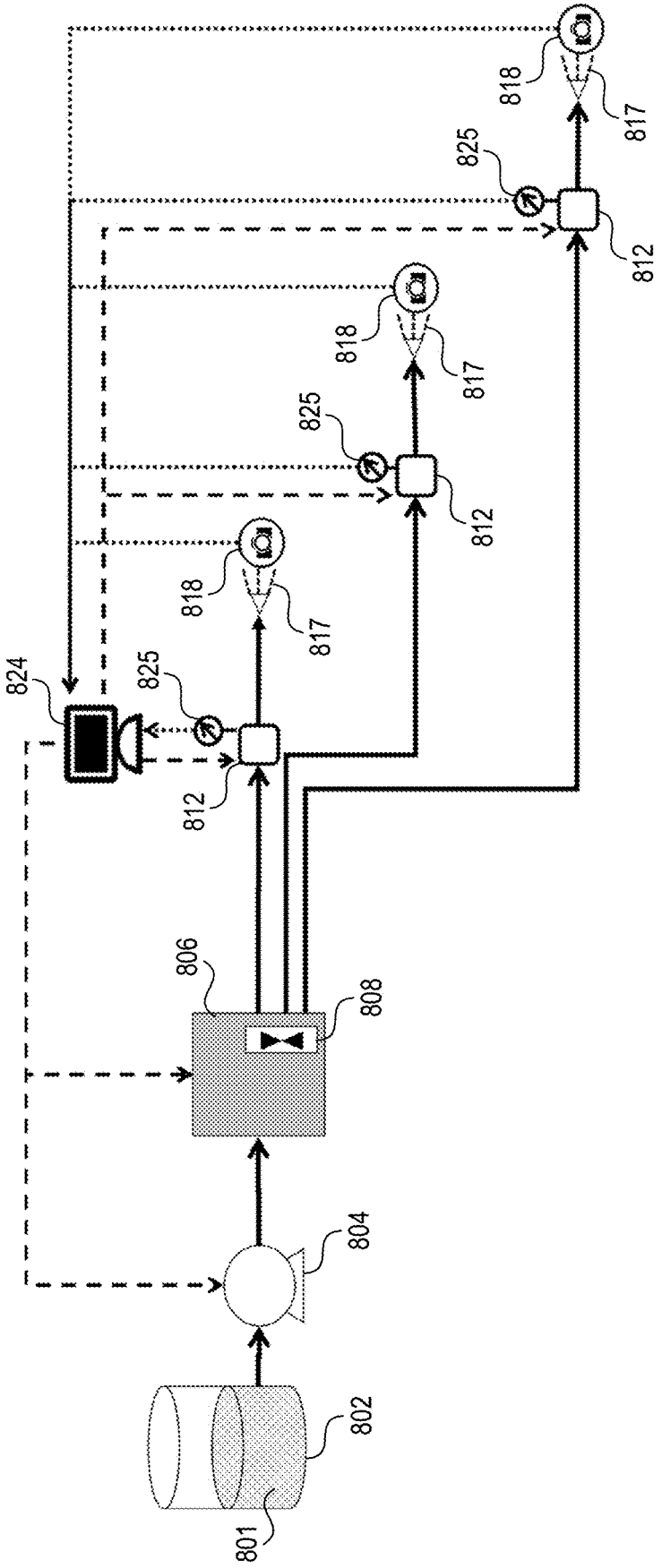
810
818
817
825
812
818
817
825
812
818
817
824
825
812
806
808
804
802
801

FIG. 8

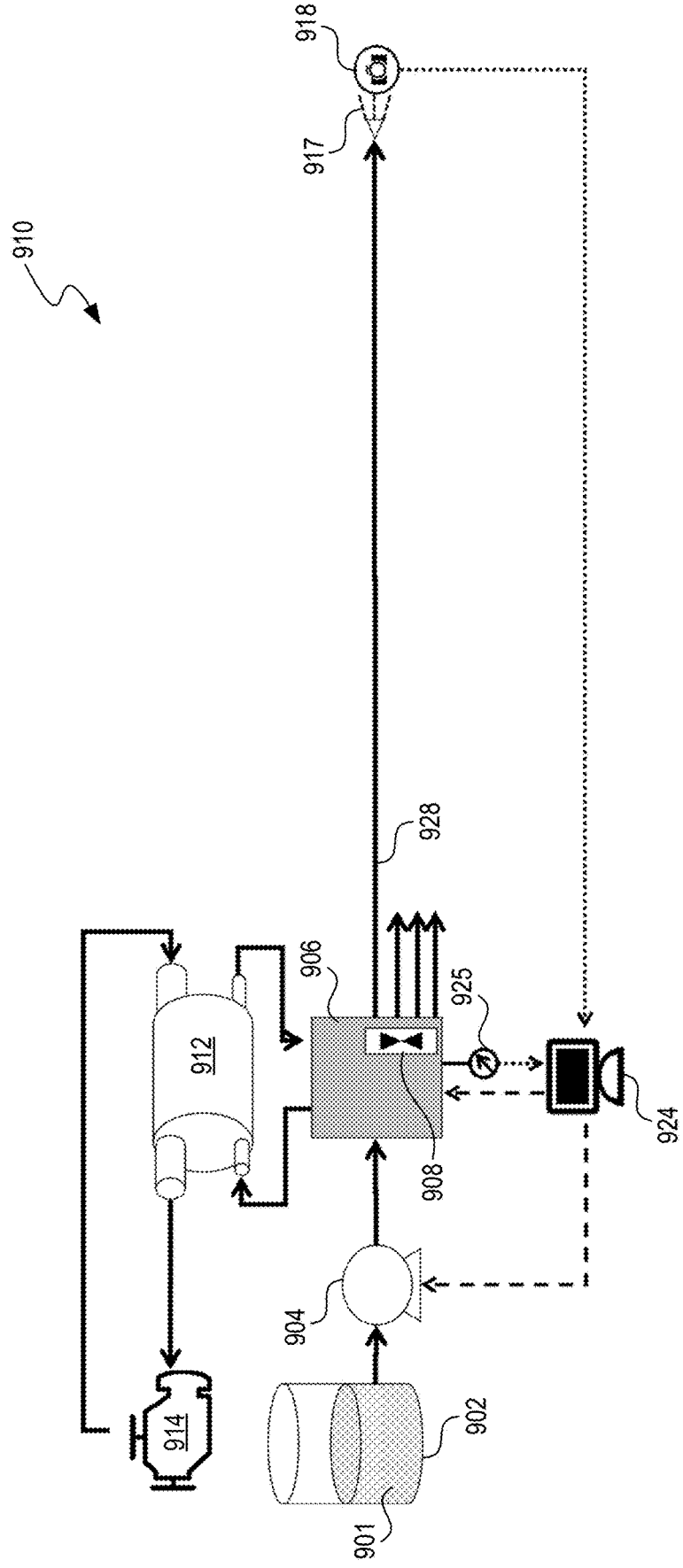

FIG. 9

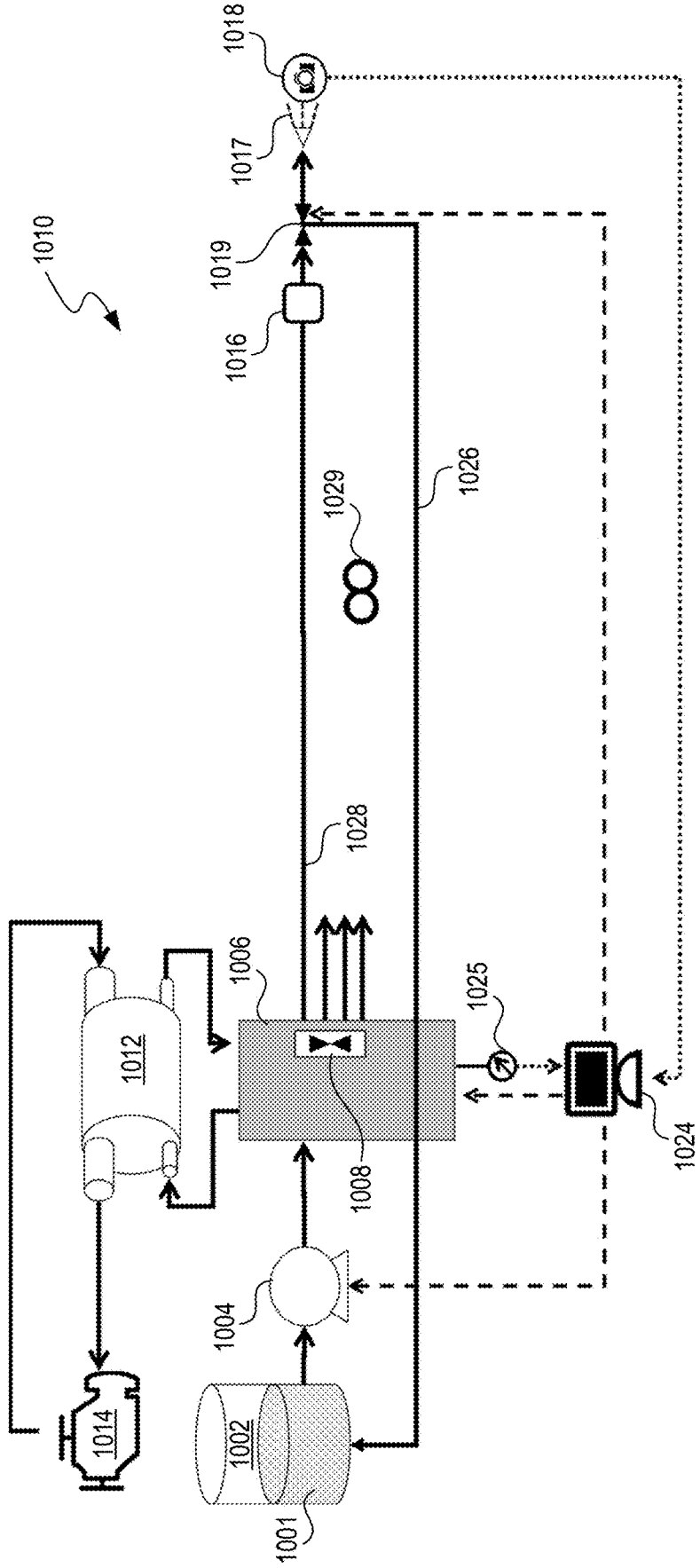
1018
1017
1010
1019
1016
1029
1026
1028
1006
1025
1012
1024
1008
1004
1014
1002
1001

FIG. 10

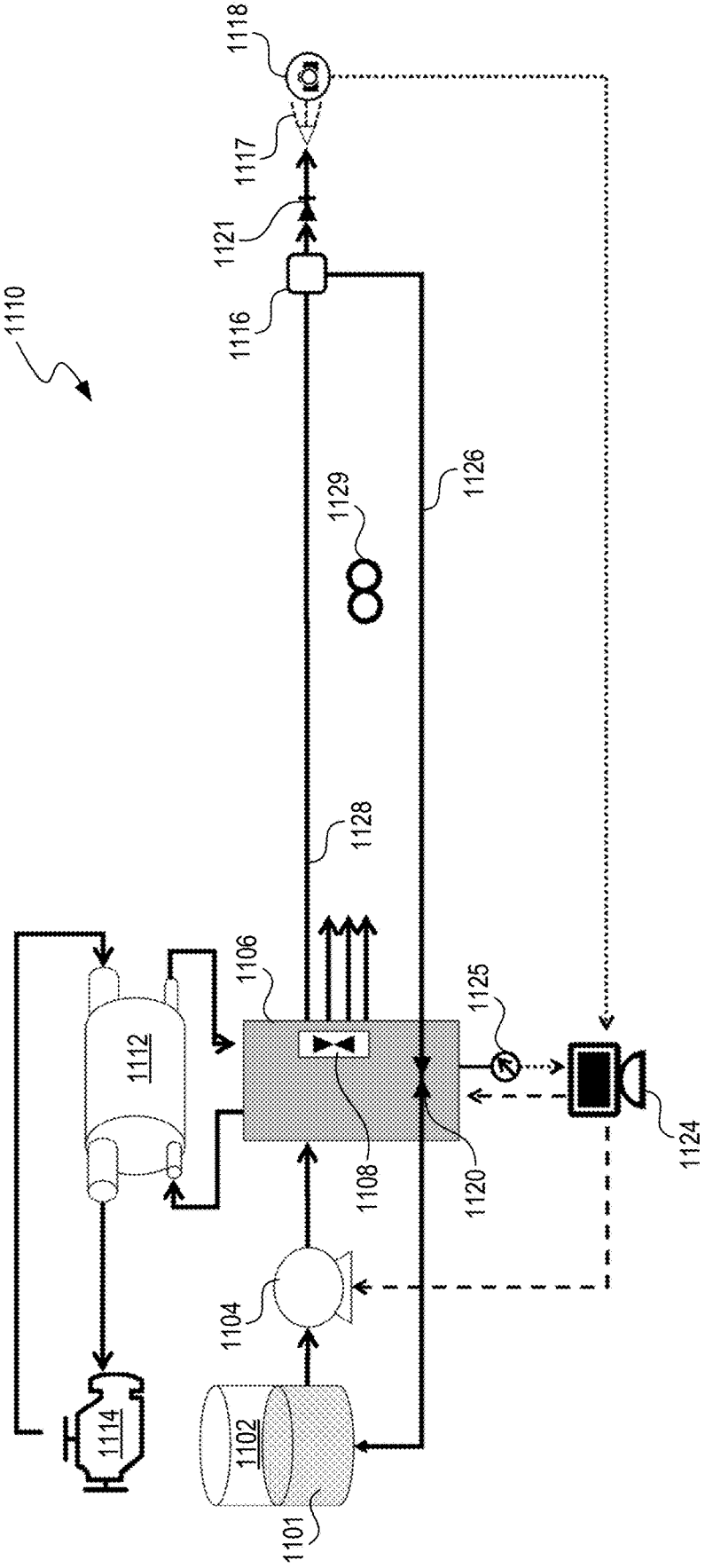
1118
1117
1121
1116
1110
1129
1126
1128
1106
1125
1112
1108
1120
1124
1104
1114
1102
1101

FIG. 11

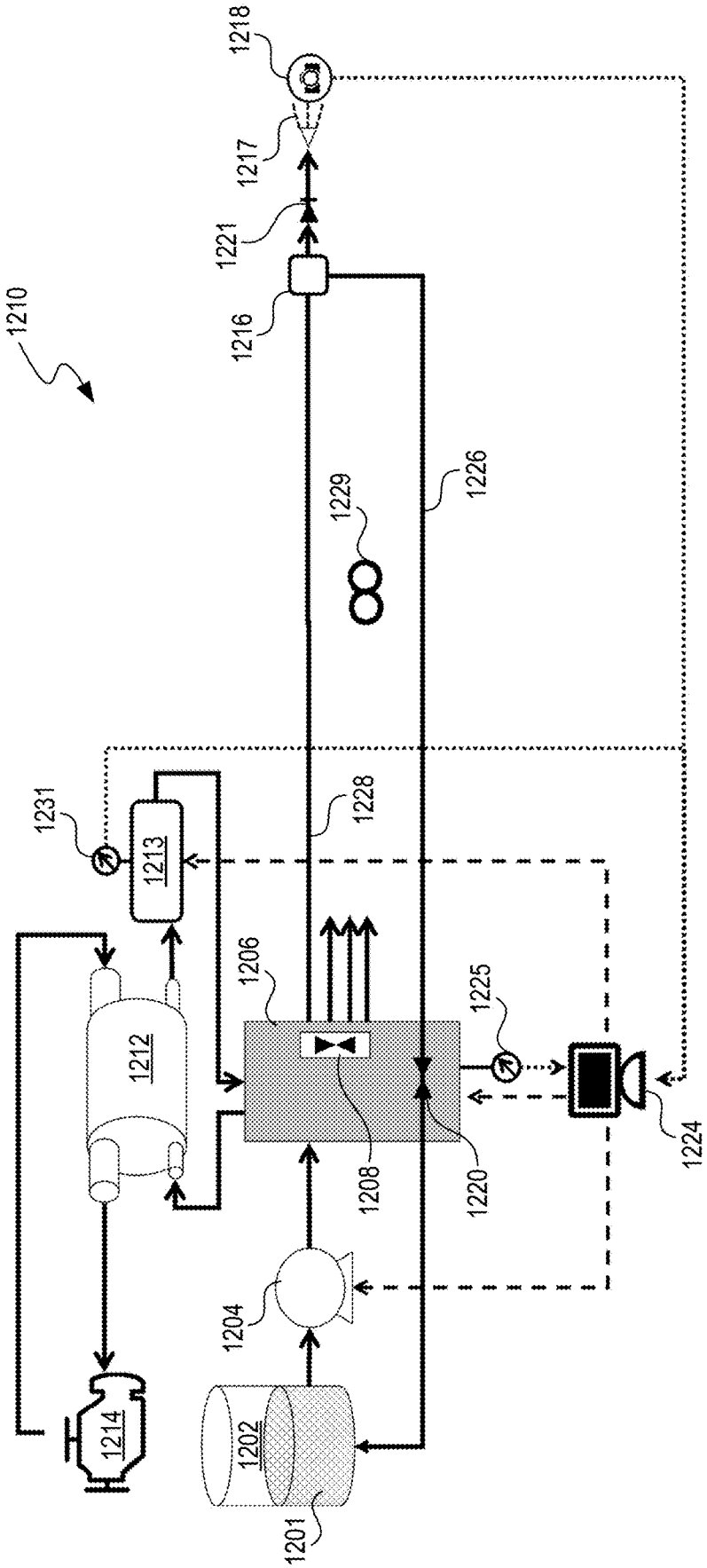
1218
1217
1221
1216
1210
1229
1226
1231
1213
1228
1206
1225
1212
1208
1220
1224
1204
1214
1202
1201

FIG. 12

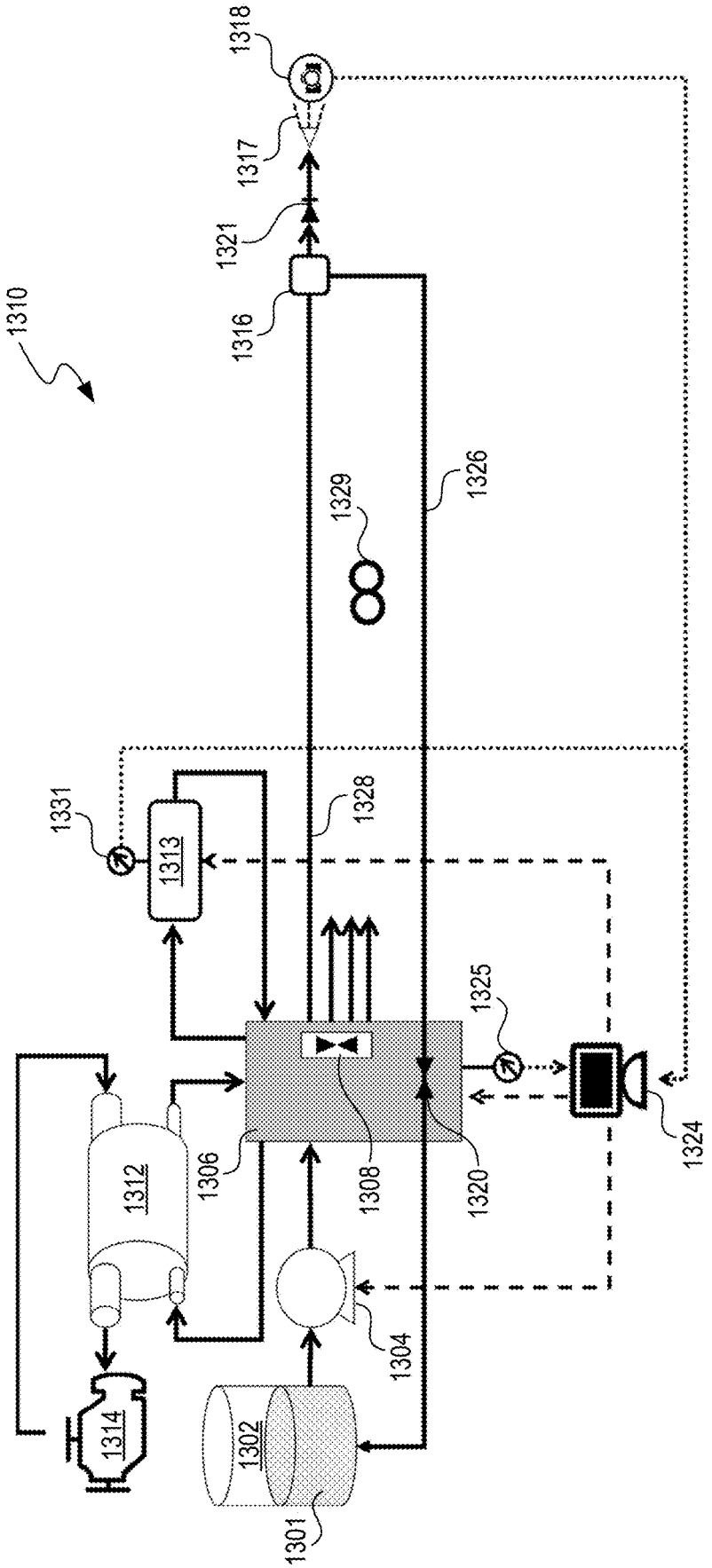
1310
1318
1317
1321
1316
1326
1329
1331
1313
1328
1325
1324
1306
1308
1320
1312
1304
1314
1302
1301

FIG. 13

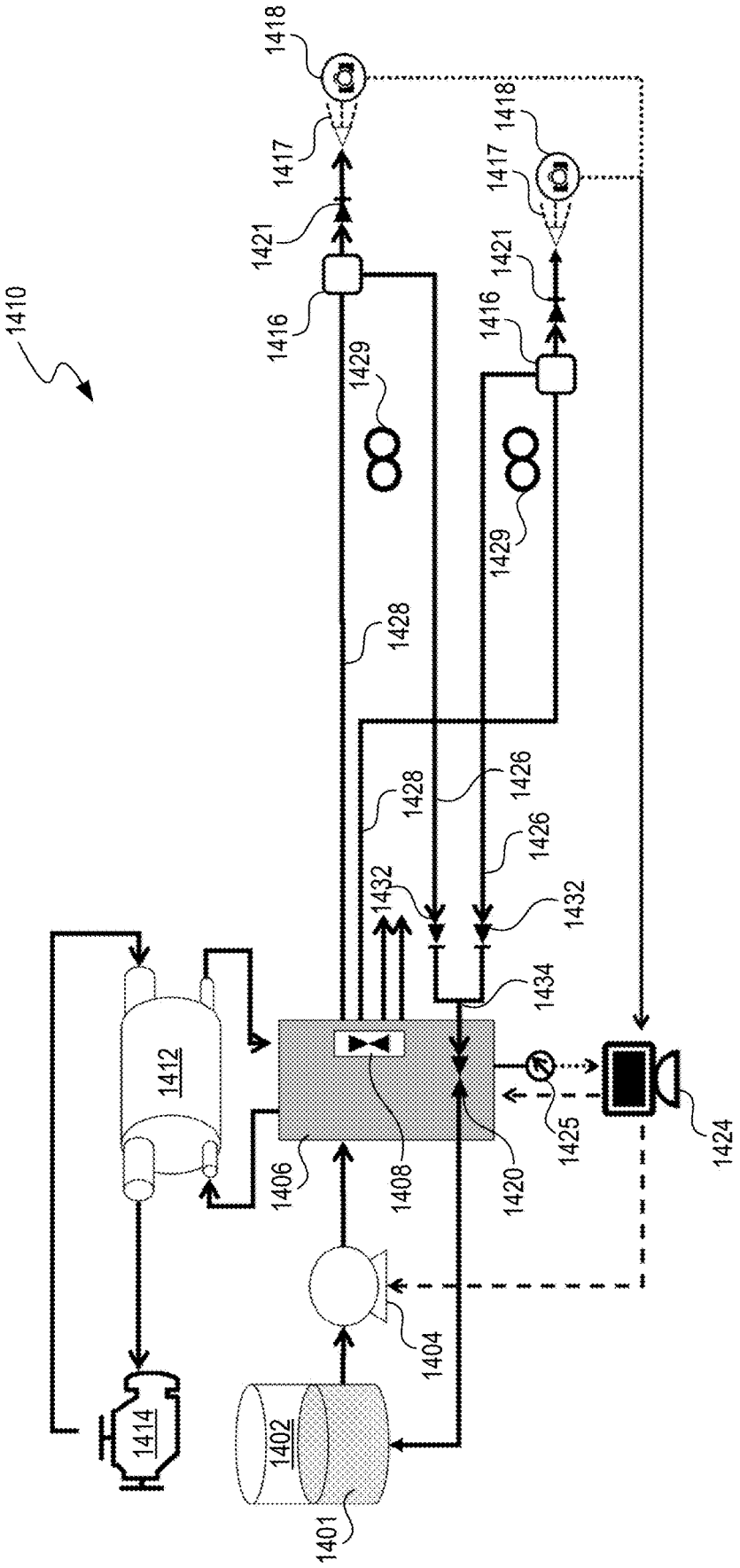
1410
1418
1417
1421
1416
1429
1428
1426
1432
1434
1412
1406
1408
1420
1425
1424
1404
1414
1402
1401

FIG. 14

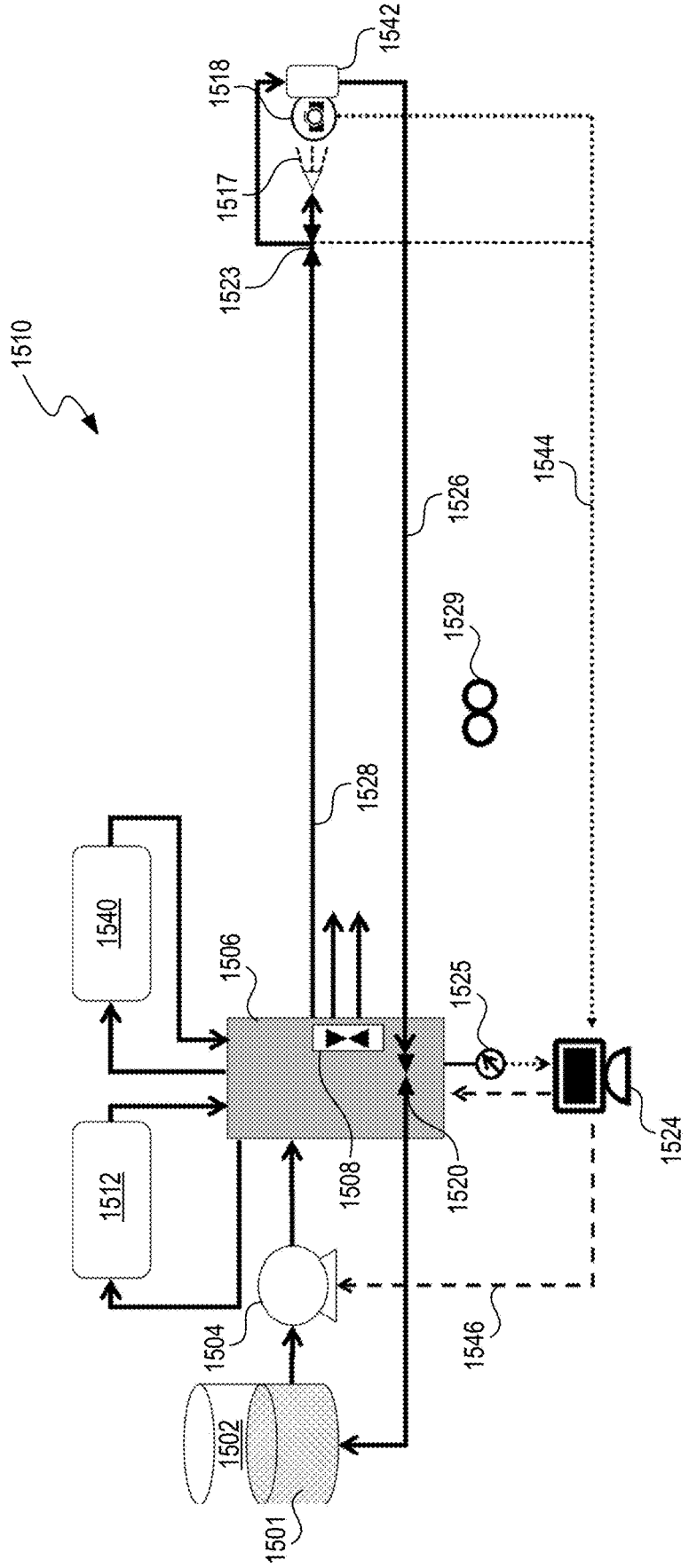
1510
1542
1518
1517
1523
1544
1526
1529
1528
1540
1506
1525
1524
1512
1508
1520
1504
1546
1502
1501

FIG. 15

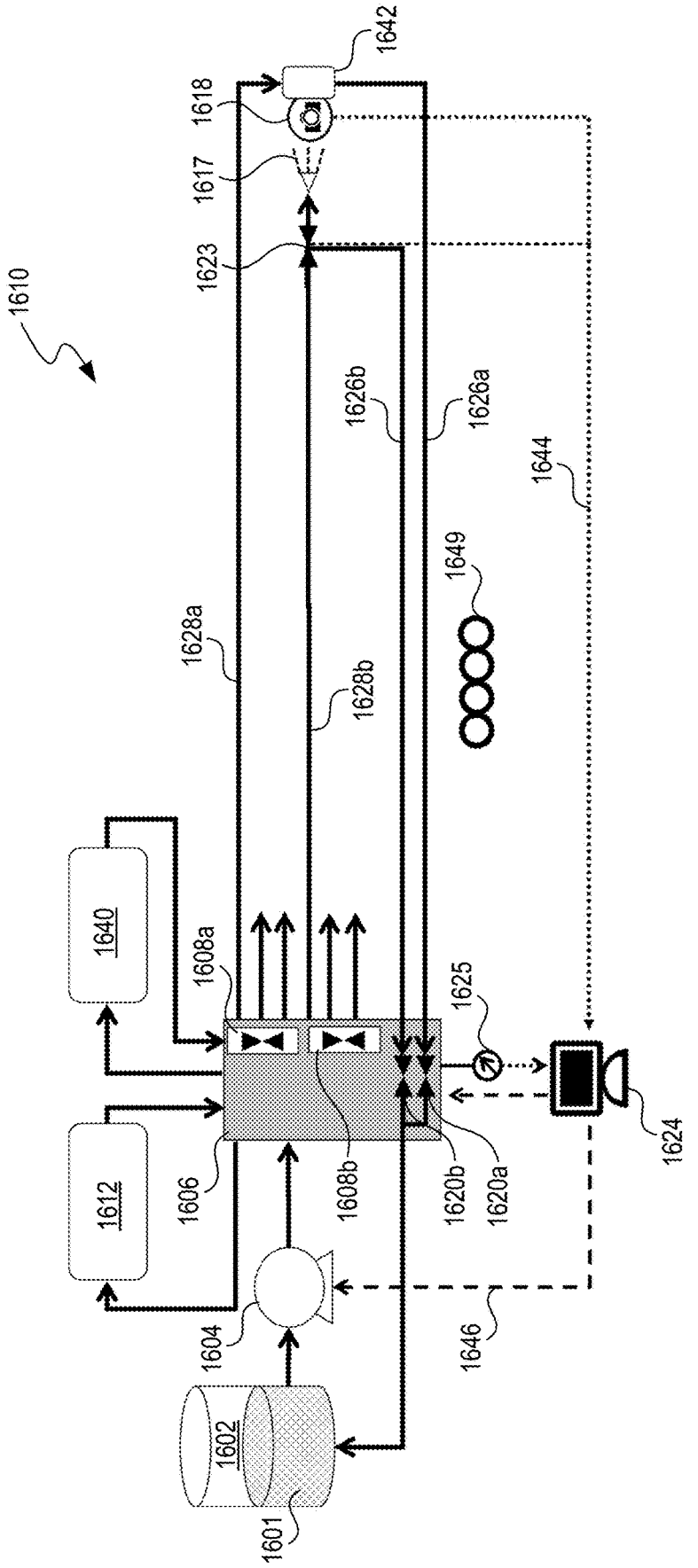
1642
1618
1617
1623
1610
1626b
1626a
1644
1649
1628a
1628b
1640
1608a
1625
1612
1606
1608b
1620b
1620a
1624
1604
1646
1602
1601

FIG. 16

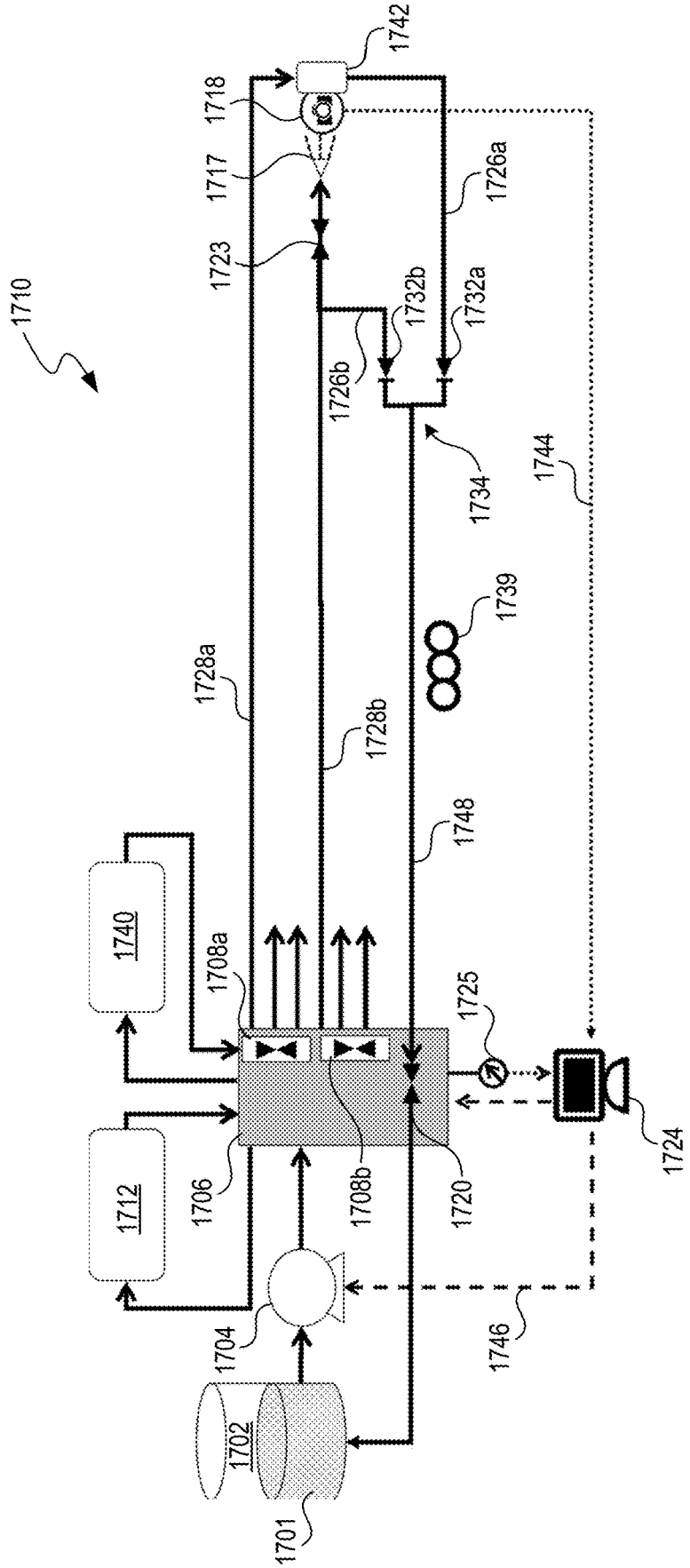
1710
1742
1718
1717
1723
1726a
1732b
1732a
1726b
1734
1744
1739
1728a
1728b
1748
1740
1708a
1725
1712
1706
1708b
1720
1724
1704
1746
1702
1701

FIG. 17

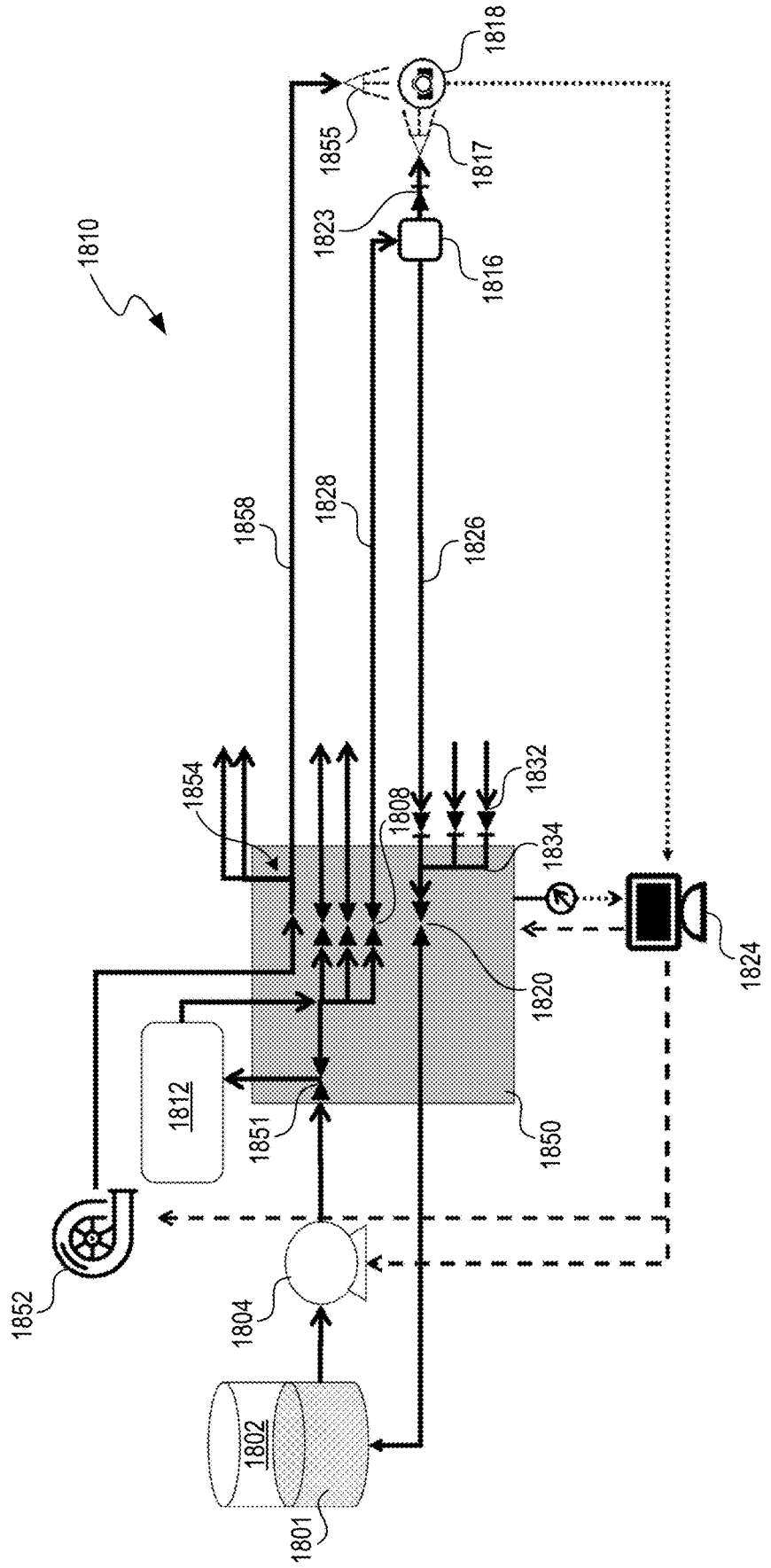
1810
1818
1855
1817
1823
1816
1858
1828
1826
1854
1832
1808
1834
1824
1820
1812
1851
1850
1852
1804
1802
1801

FIG. 18

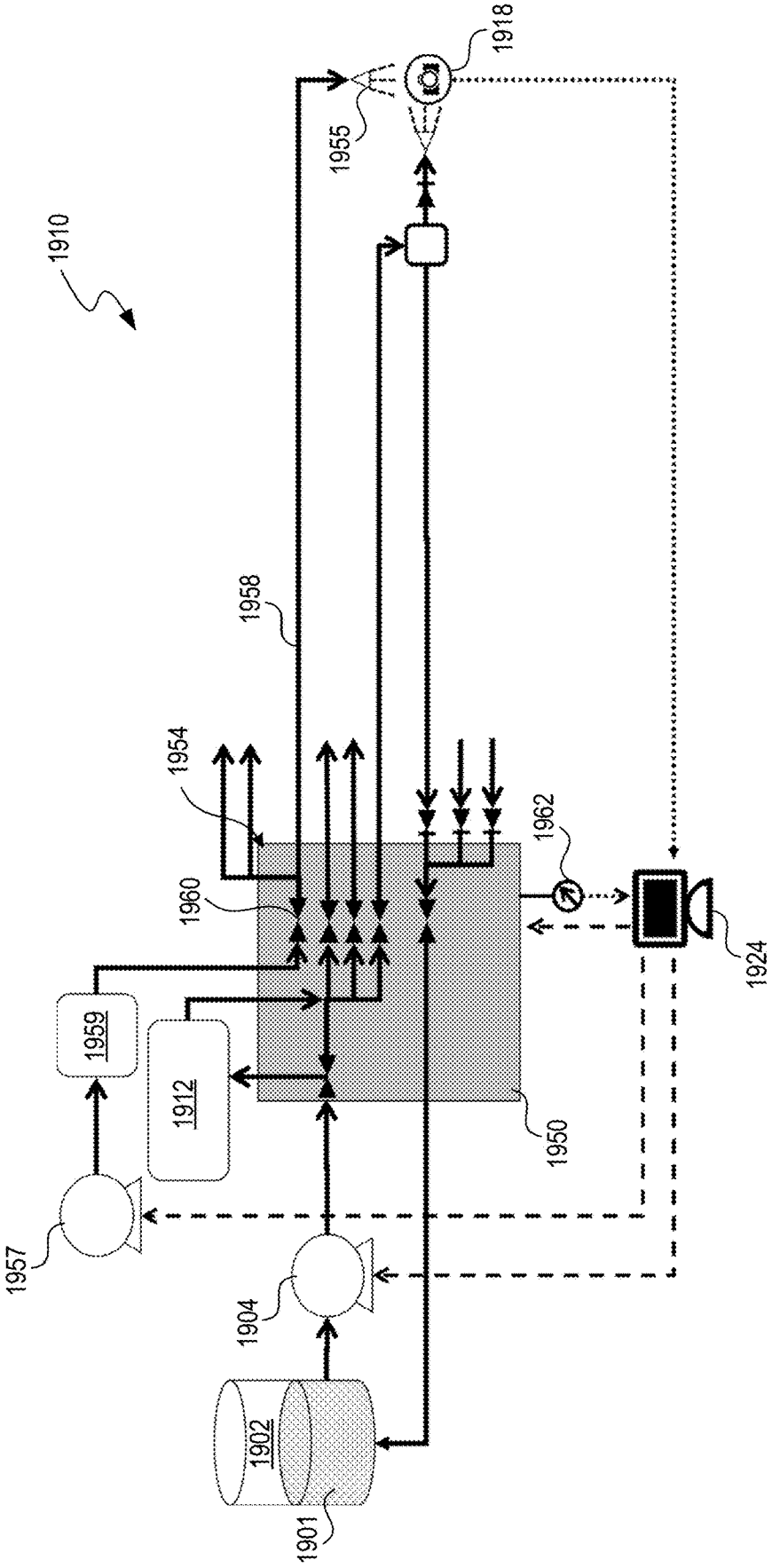
1910
1918
1955
1958
1954
1962
1960
1924
1959
1912
1950
1957
1904
1902
1901

FIG. 19

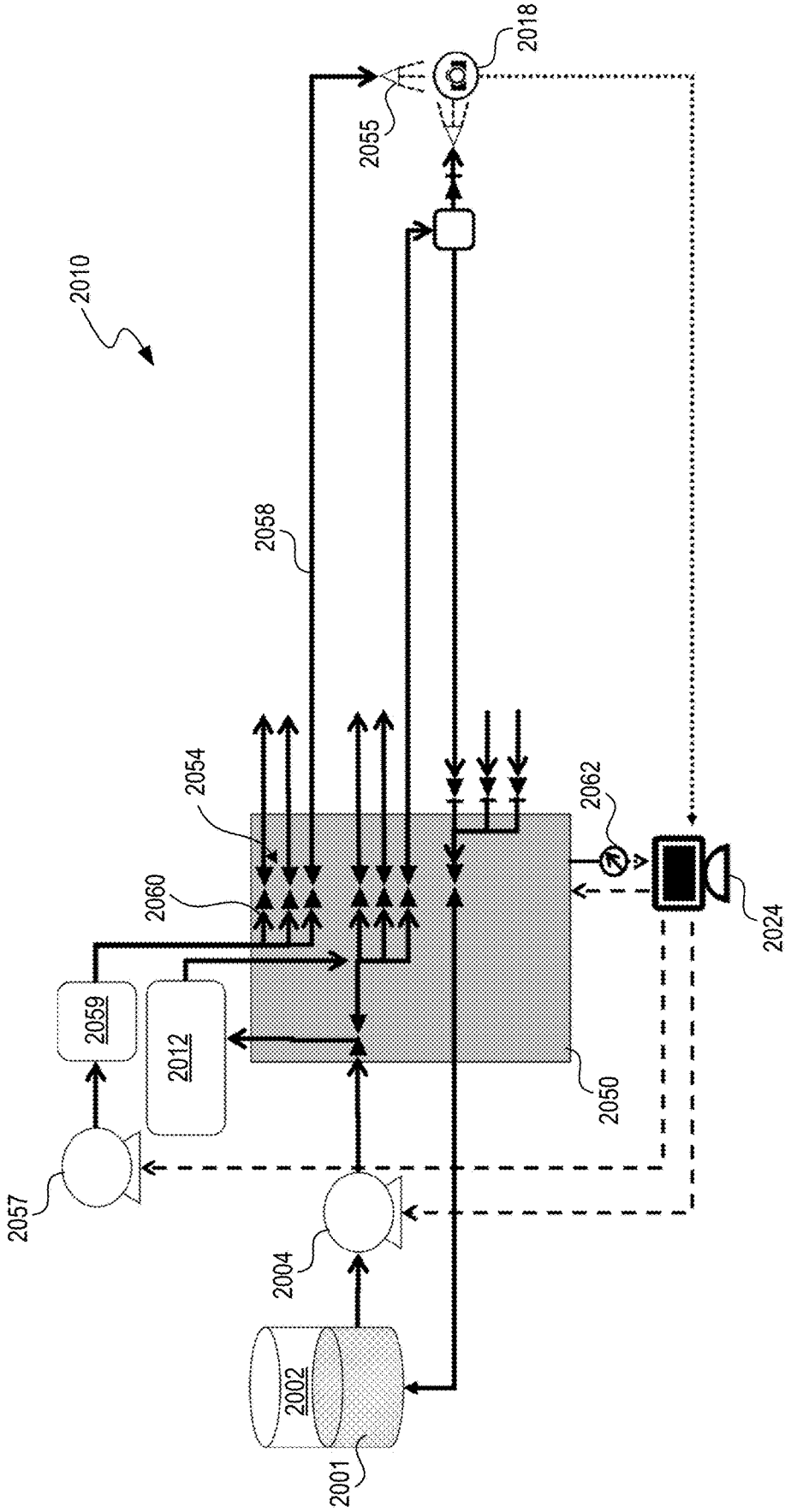
2010
2018
2055
2058
2054
2062
2060
2024
2059
2012
2050
2057
2004
2002
2001

FIG. 20

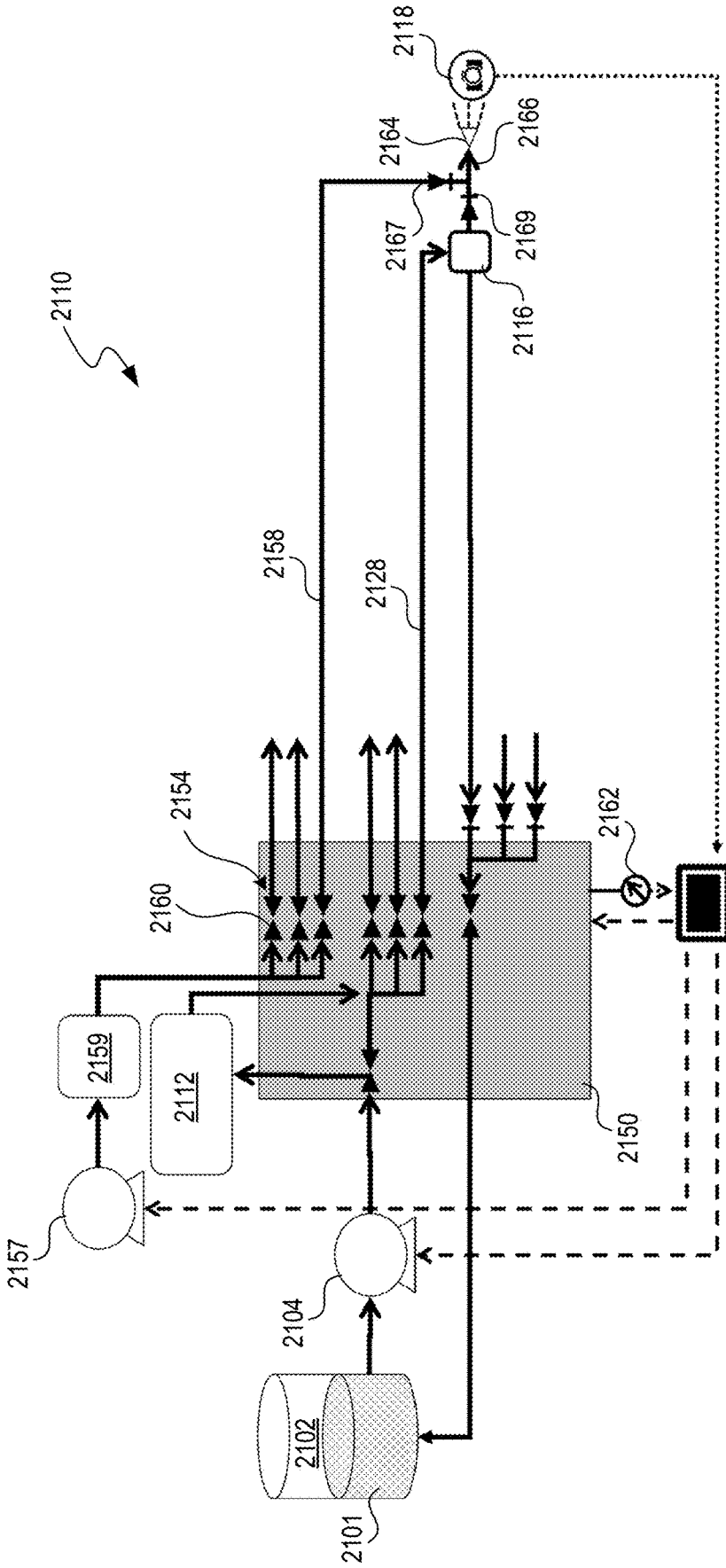
2110
2118
2164
2166
2167
2169
2116
2158
2128
2154
2160
2162
2124
2159
2112
2150
2157
2104
2102
2101

FIG. 21

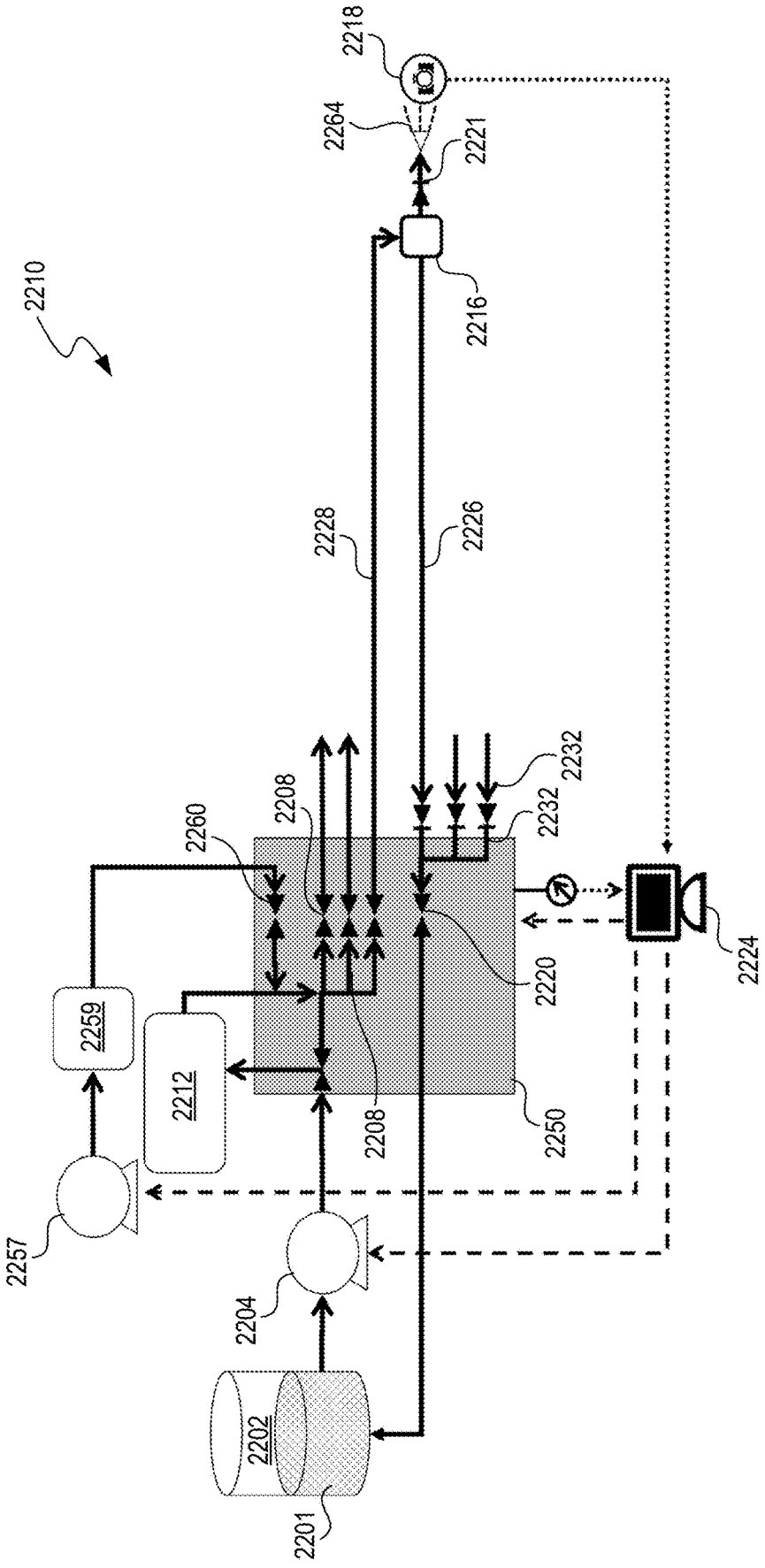
2218
2264
2221
2210
2216
2228
2226
2232
2232
2208
2260
2220
2224
2259
2212
2208
2250
2257
2204
2202
2201

FIG. 22

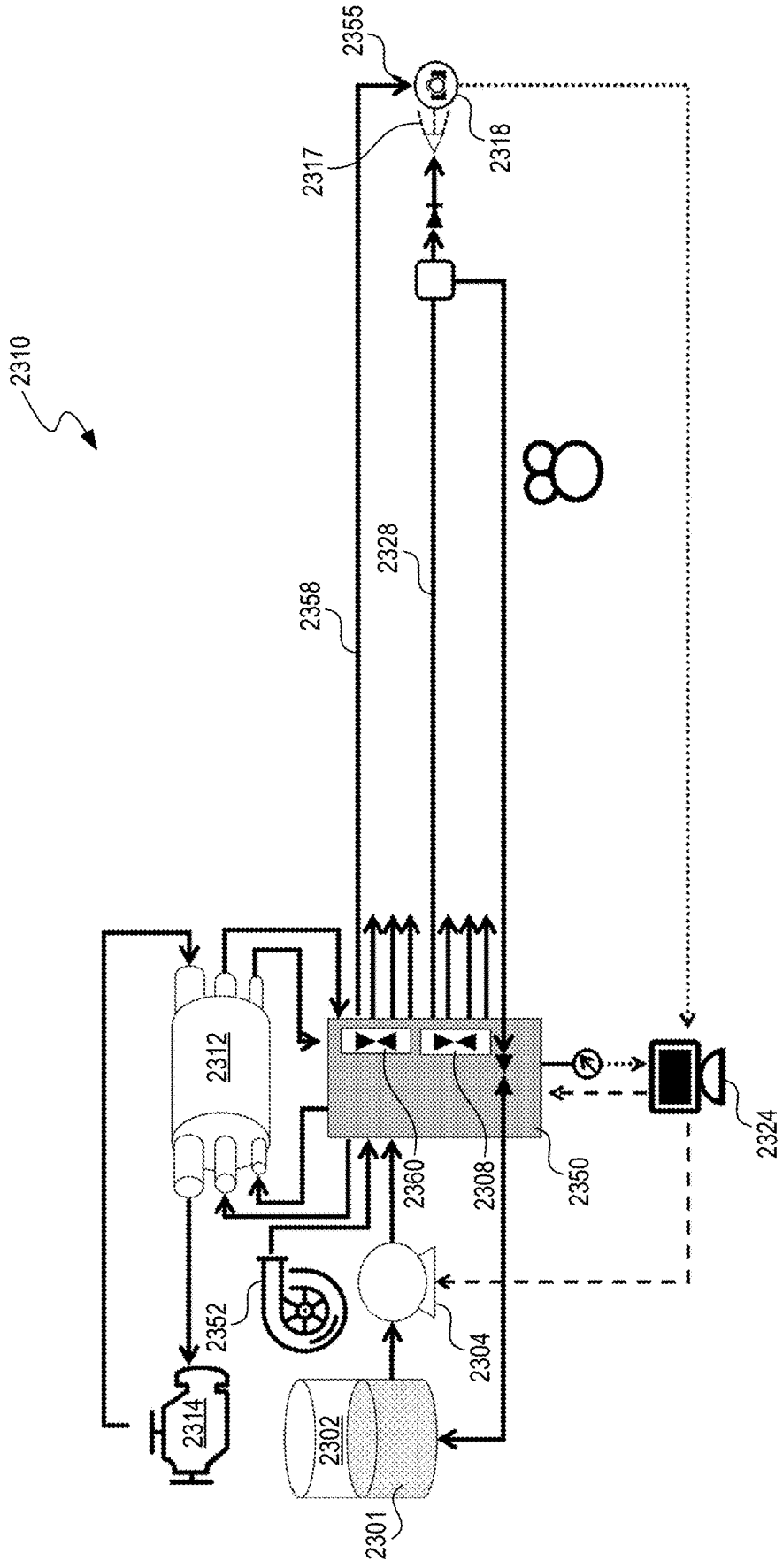
2310
2355
2318
2317
2328
2358
2312
2360
2308
2350
2324
2352
2304
2314
2302
2301

FIG. 23

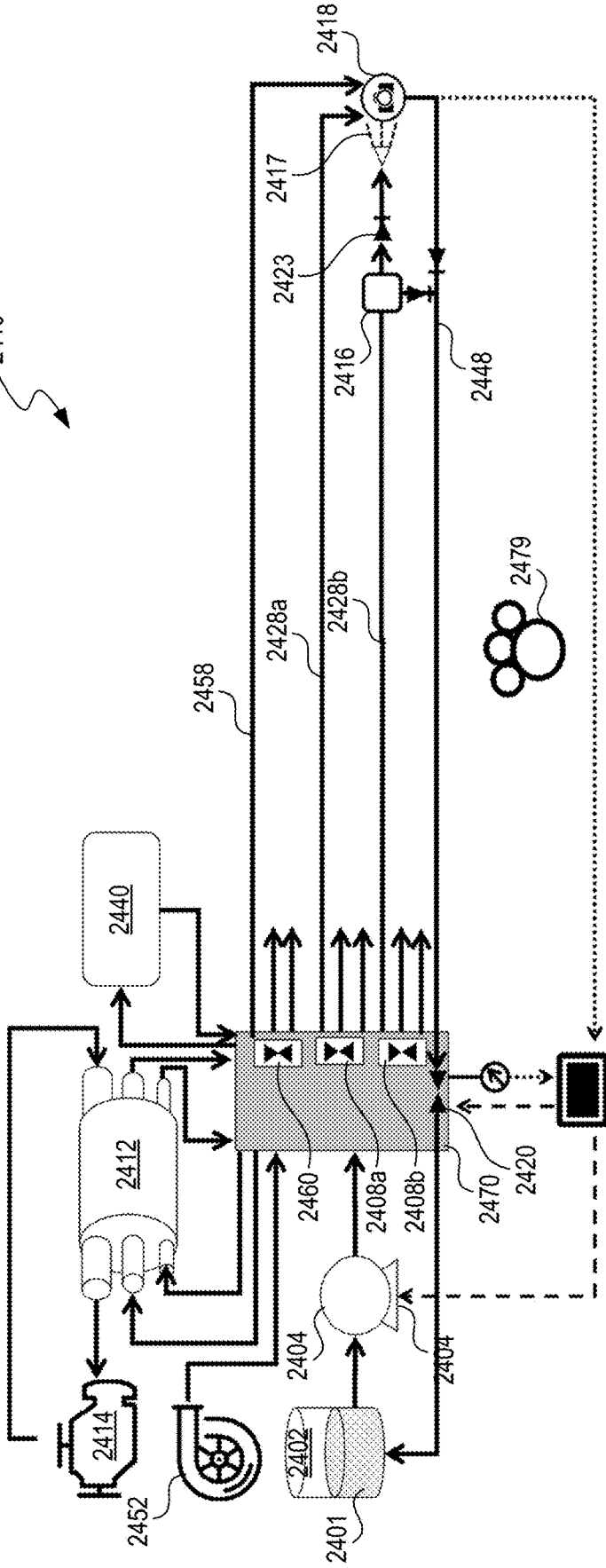
2410
2418
2417
2423
2416
2448
2479
2428a
2428b
2458
2440
2412
2460
2408a
2408b
2470
2420
2424
2404
2404
2414
2452
2402
2401

FIG. 24

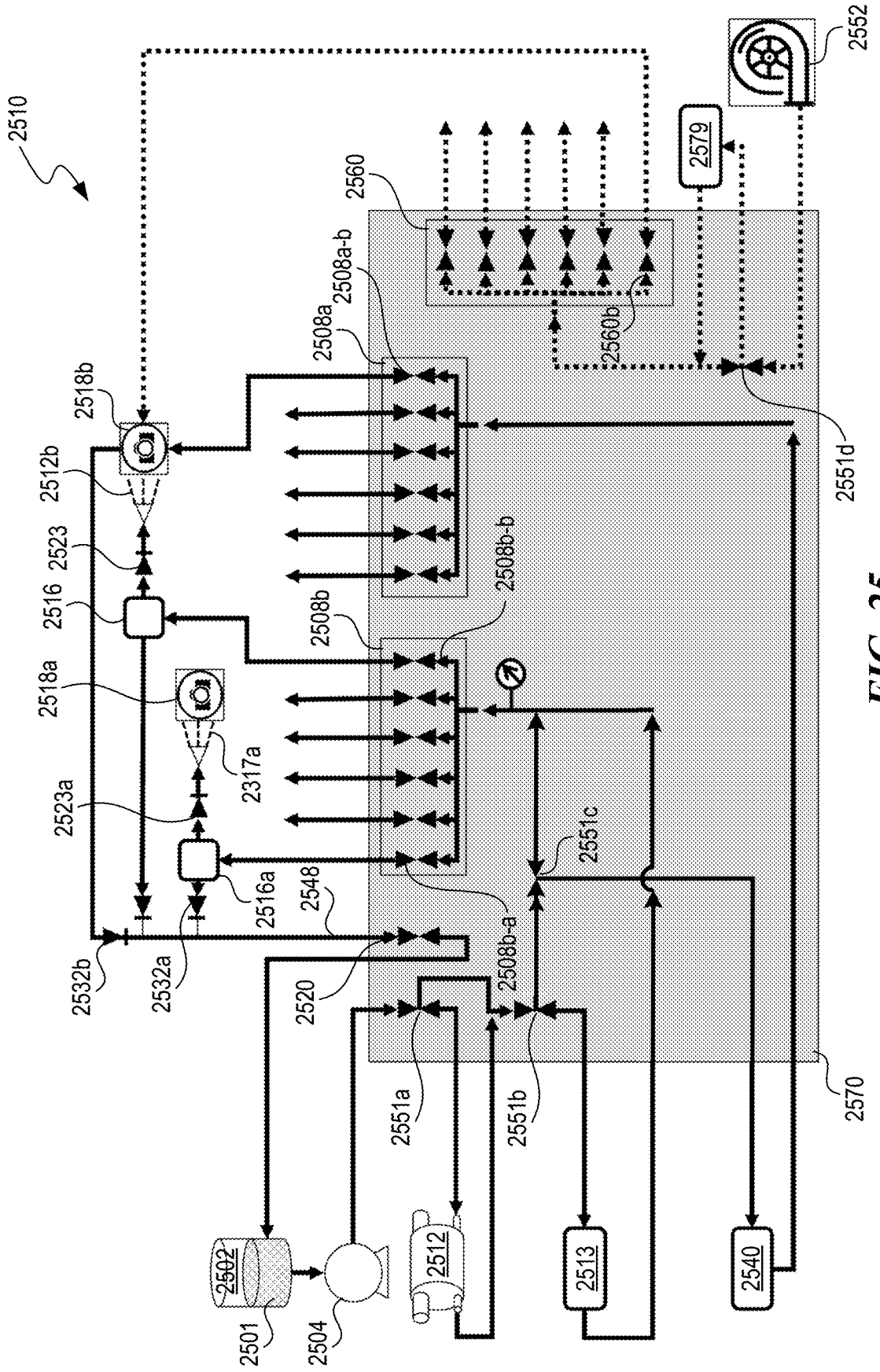
2510
2552
2579
2560
2508a-b
2560b
2508a
2518b
2512b
2523
2516
2508b-b
2508b
2518a
2317a
2523a
2516a
2548
2551c
2532b
2532a
2520
2508b-a
2551a
2551b
2570
2551d
2502
2501
2504
2512
2513
2540

FIG. 25

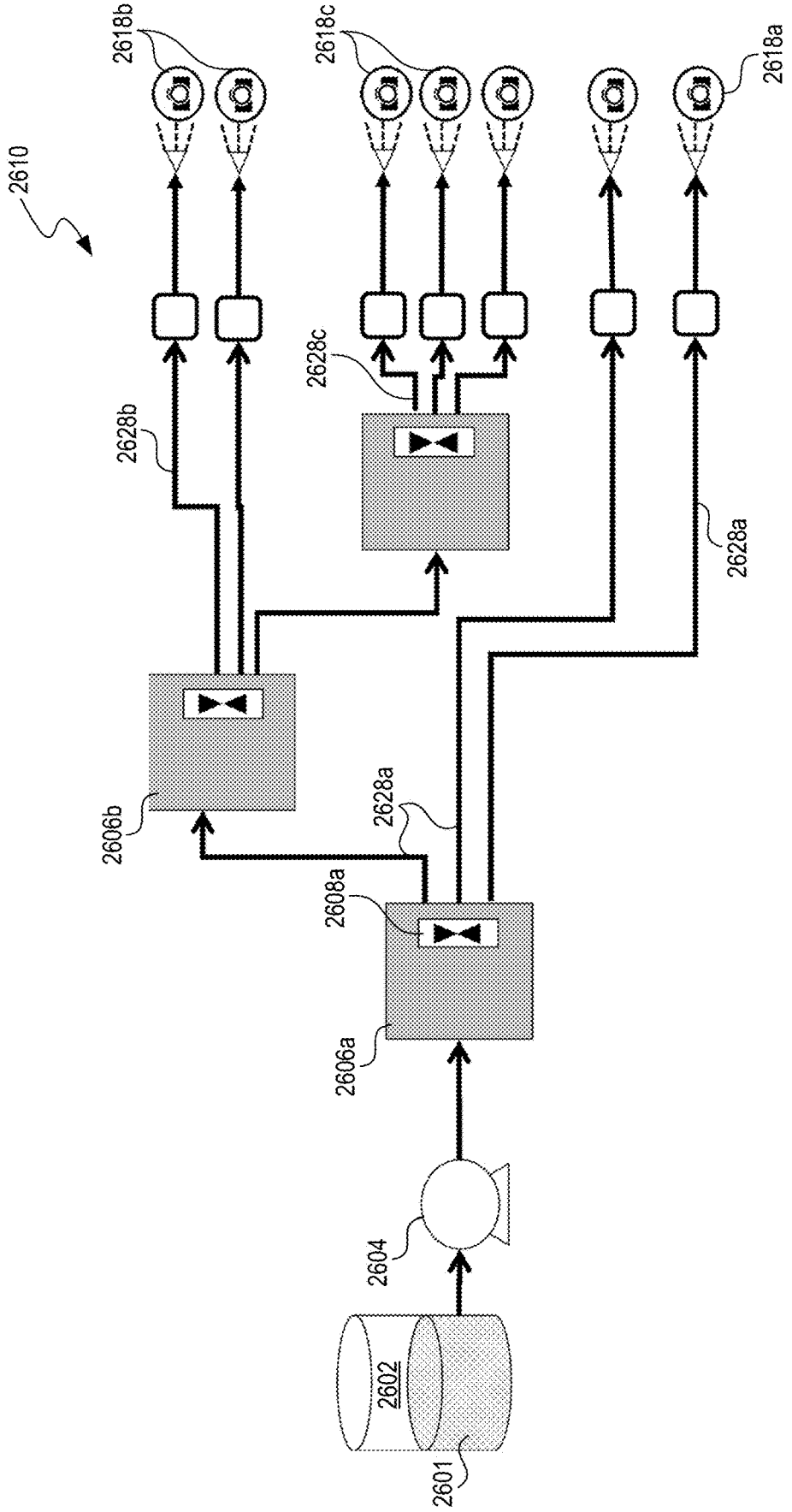
2610
2618b
2618c
2618a
2628c
2628b
2628a
2606b
2628a
2608a
2606a
2604
2602
2601

FIG. 26

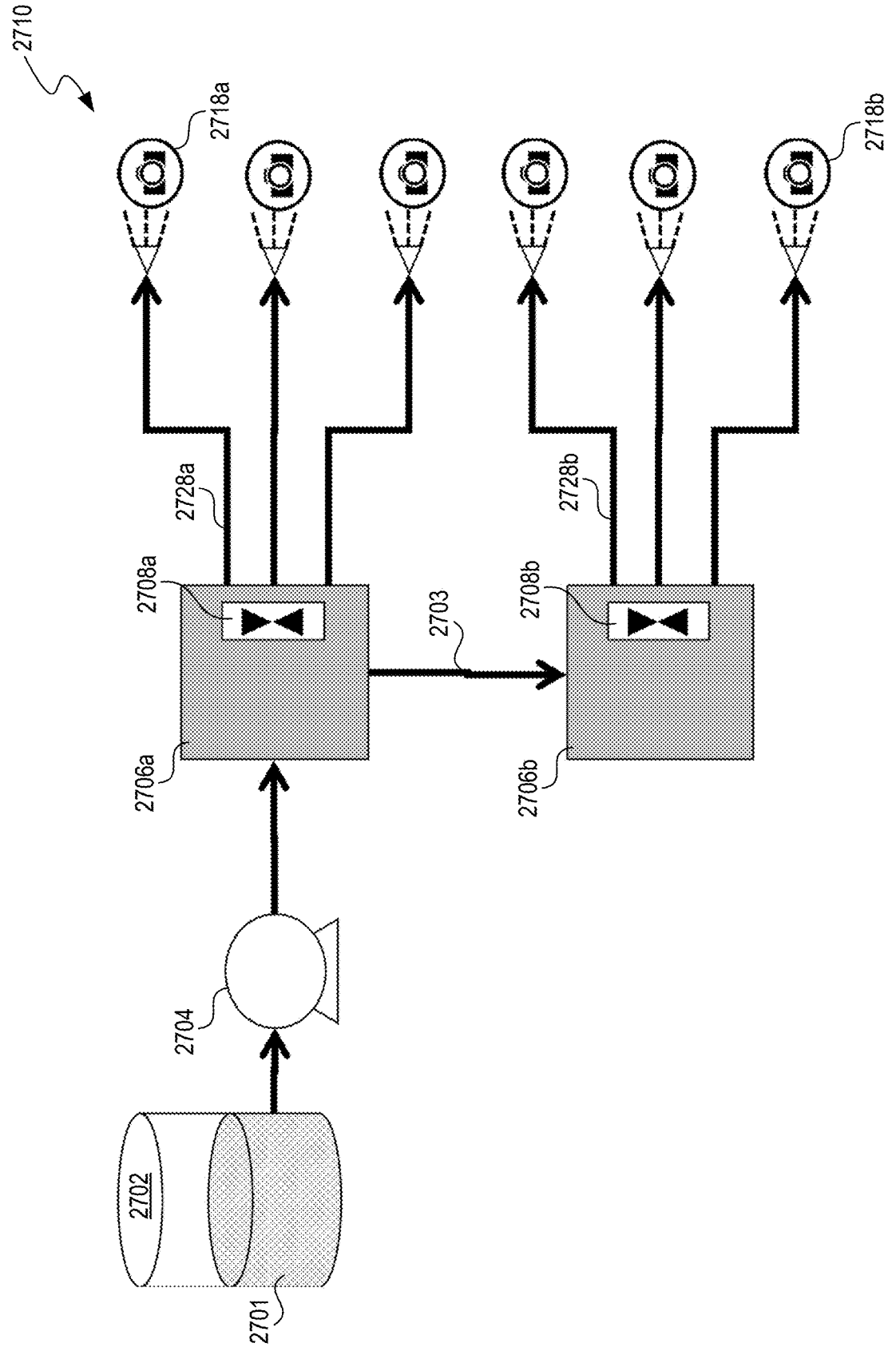
2710
2718a
2718b
2728a
2728b
2708a
2708b
2703
2706a
2706b
2704
2702
2701

FIG. 27

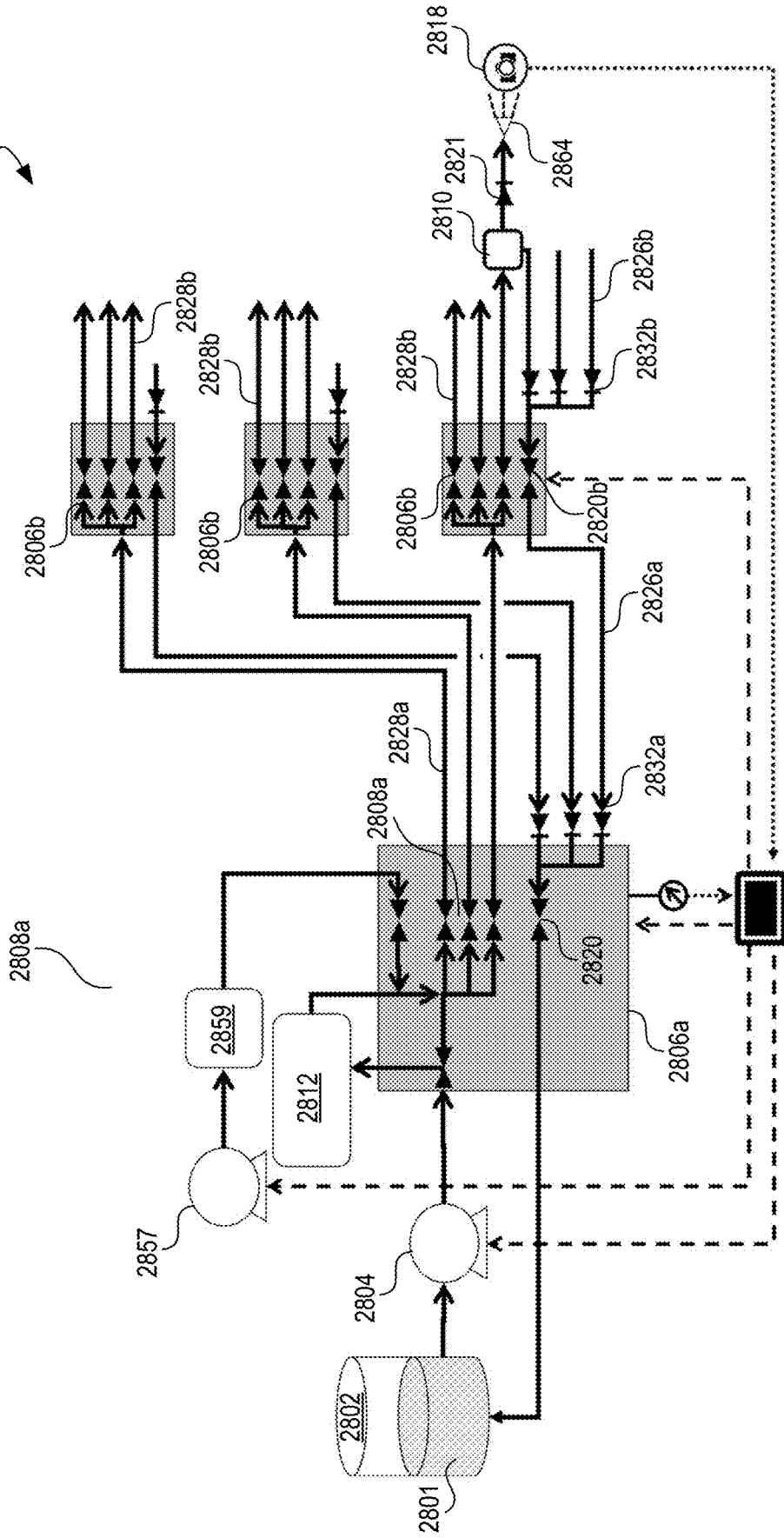
2810
2818
2864
2821
2810
2826b
2832b
2828b
2828b
2828b
2806b
2806b
2806b
2820b
2826a
2828a
2832a
2808a
2808a
2820
2824
2806a
2859
2812
2857
2804
2802
2801

FIG. 28

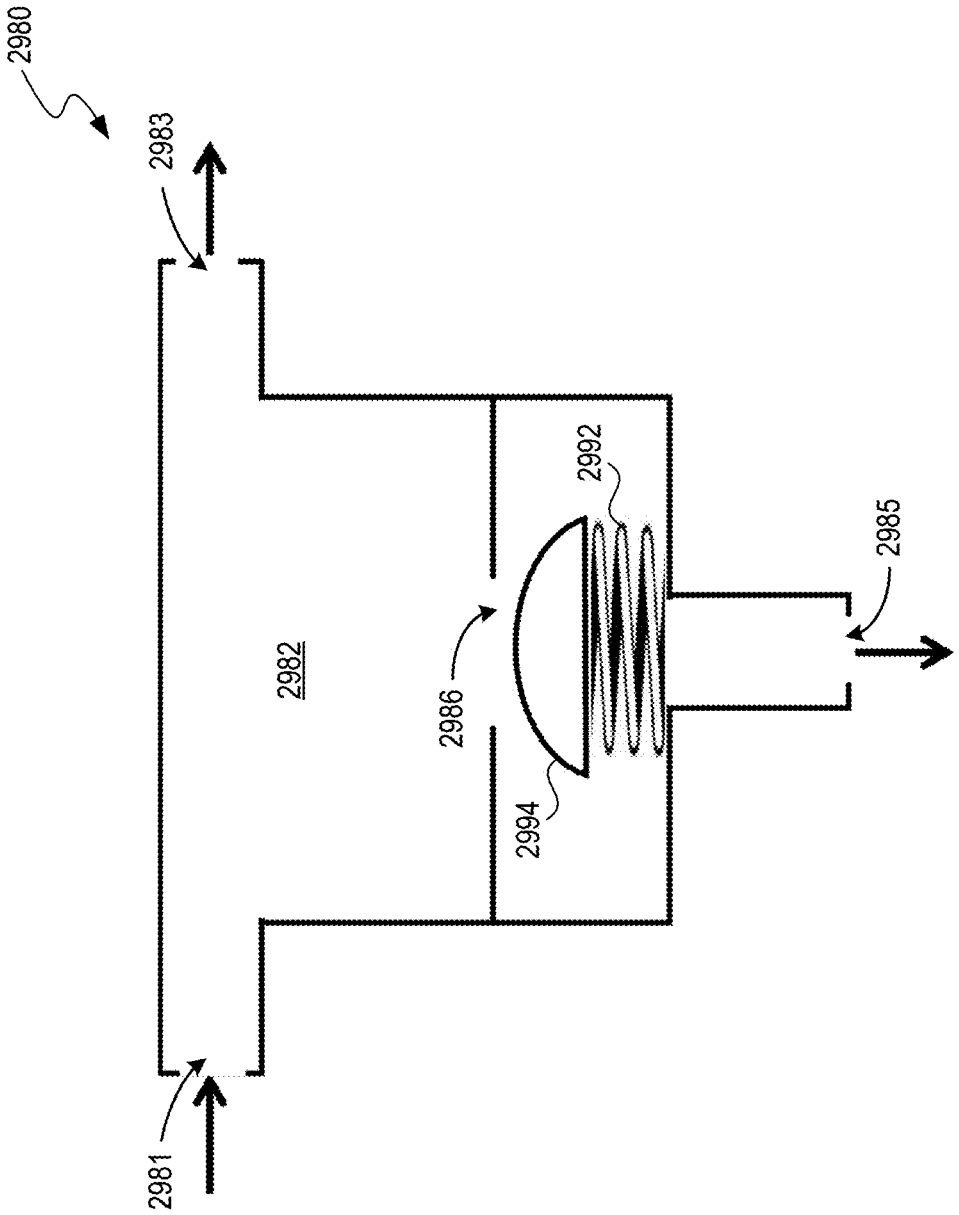

FIG. 29

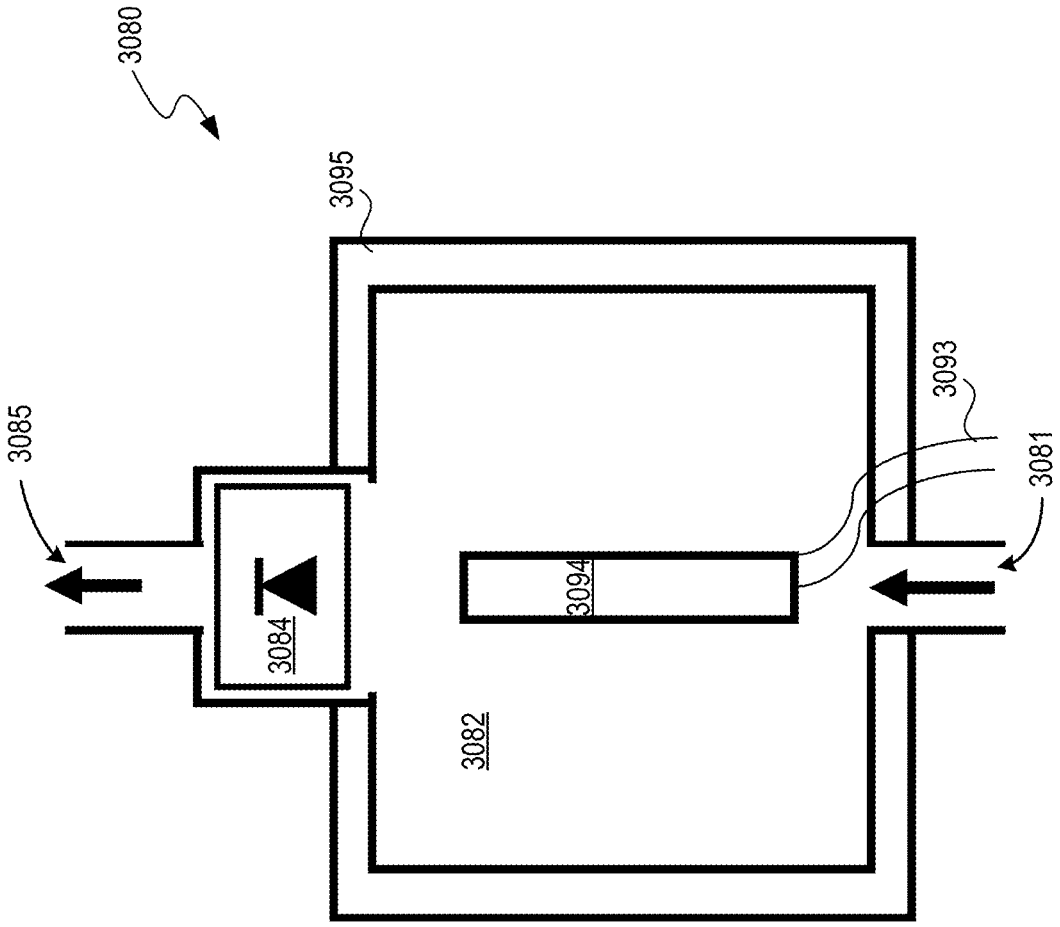

FIG. 30

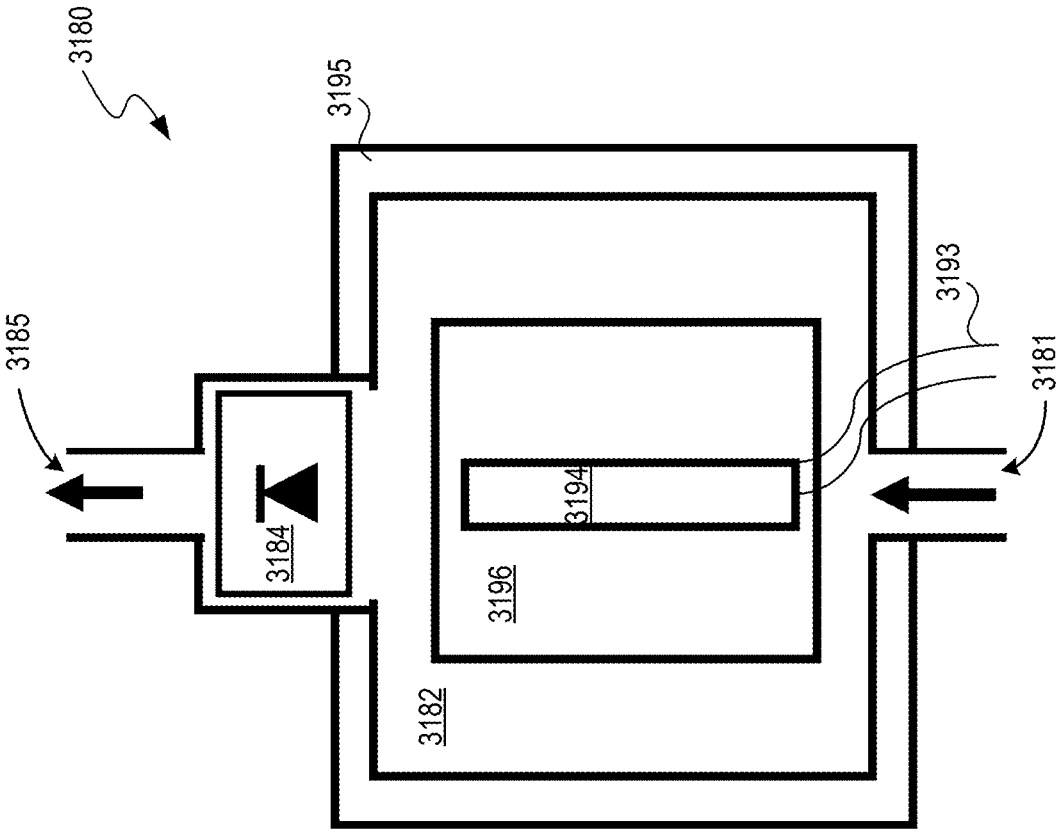

FIG. 31

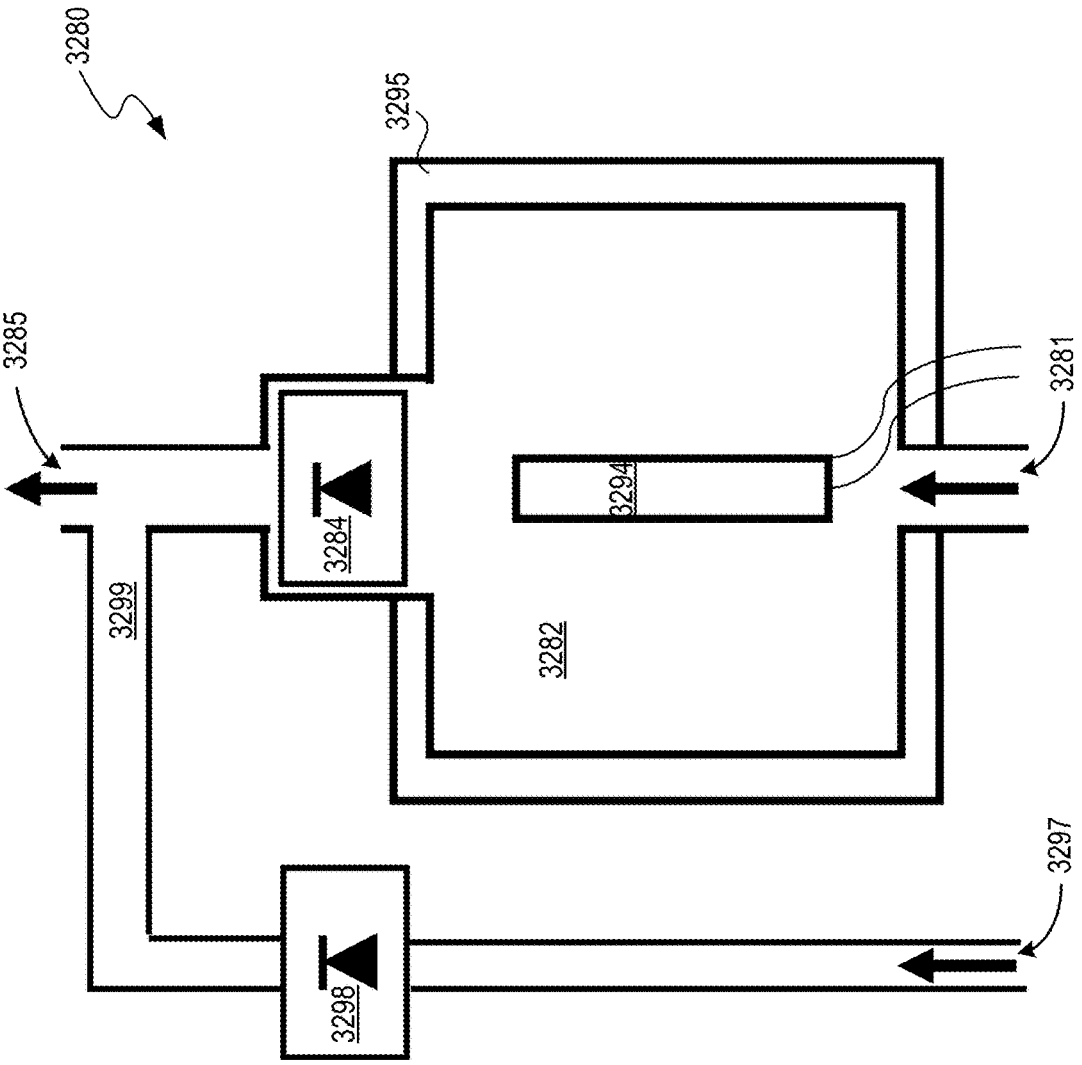

FIG. 32

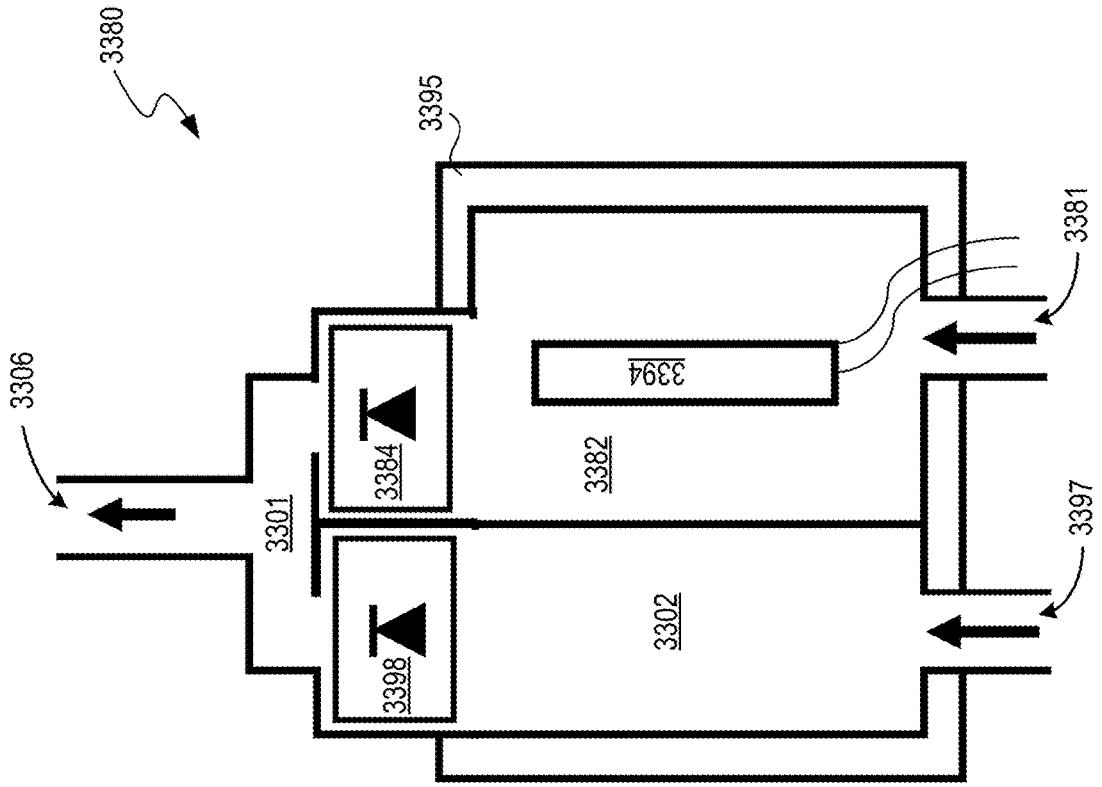

FIG. 33

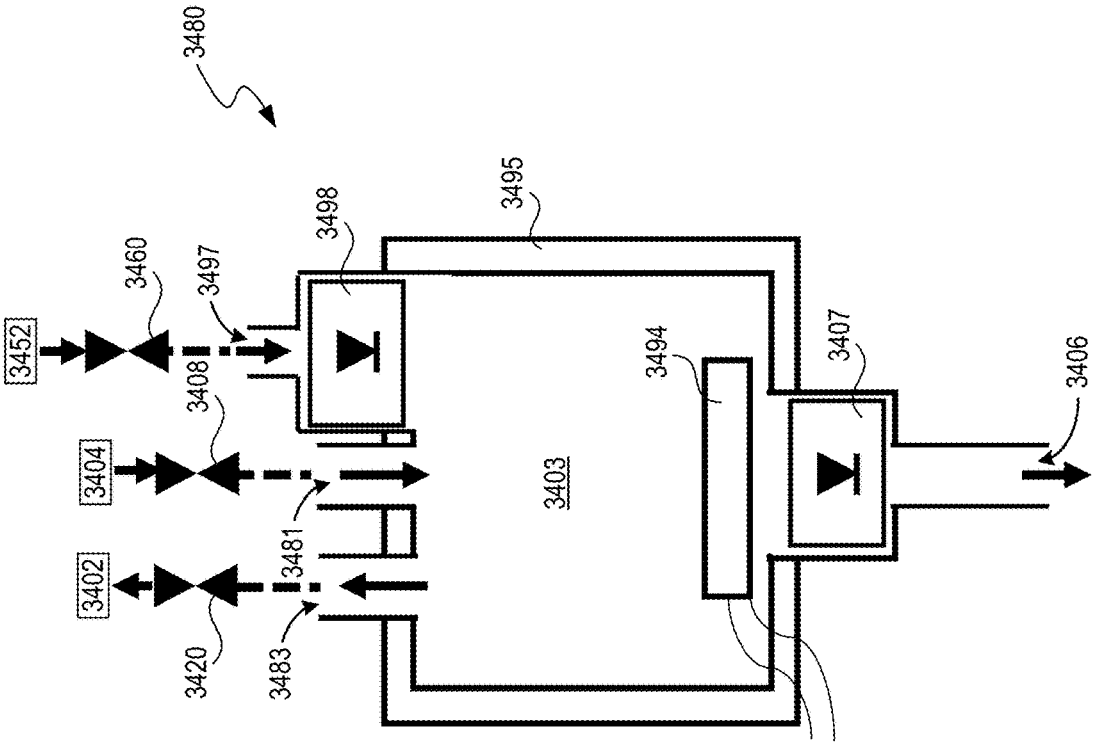
3480
3495
3498
3460
3497
3452
3408
3494
3407
3406
3404
3403
3481
3402
3420
3483

FIG. 34

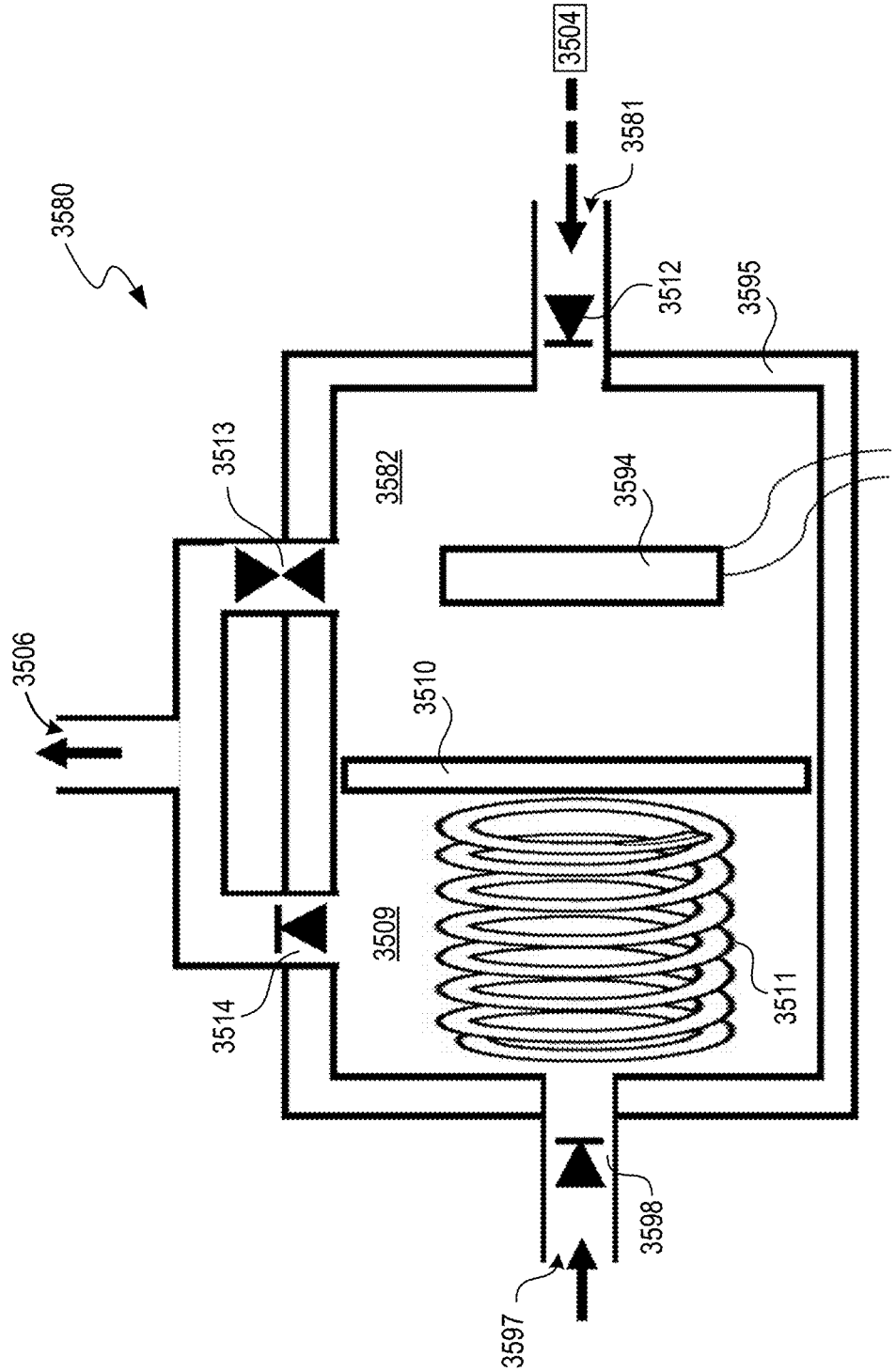
3504
3581
3580
3512
3595
3513
3582
3594
3506
3510
3509
3511
3514
3598
3597

FIG. 35

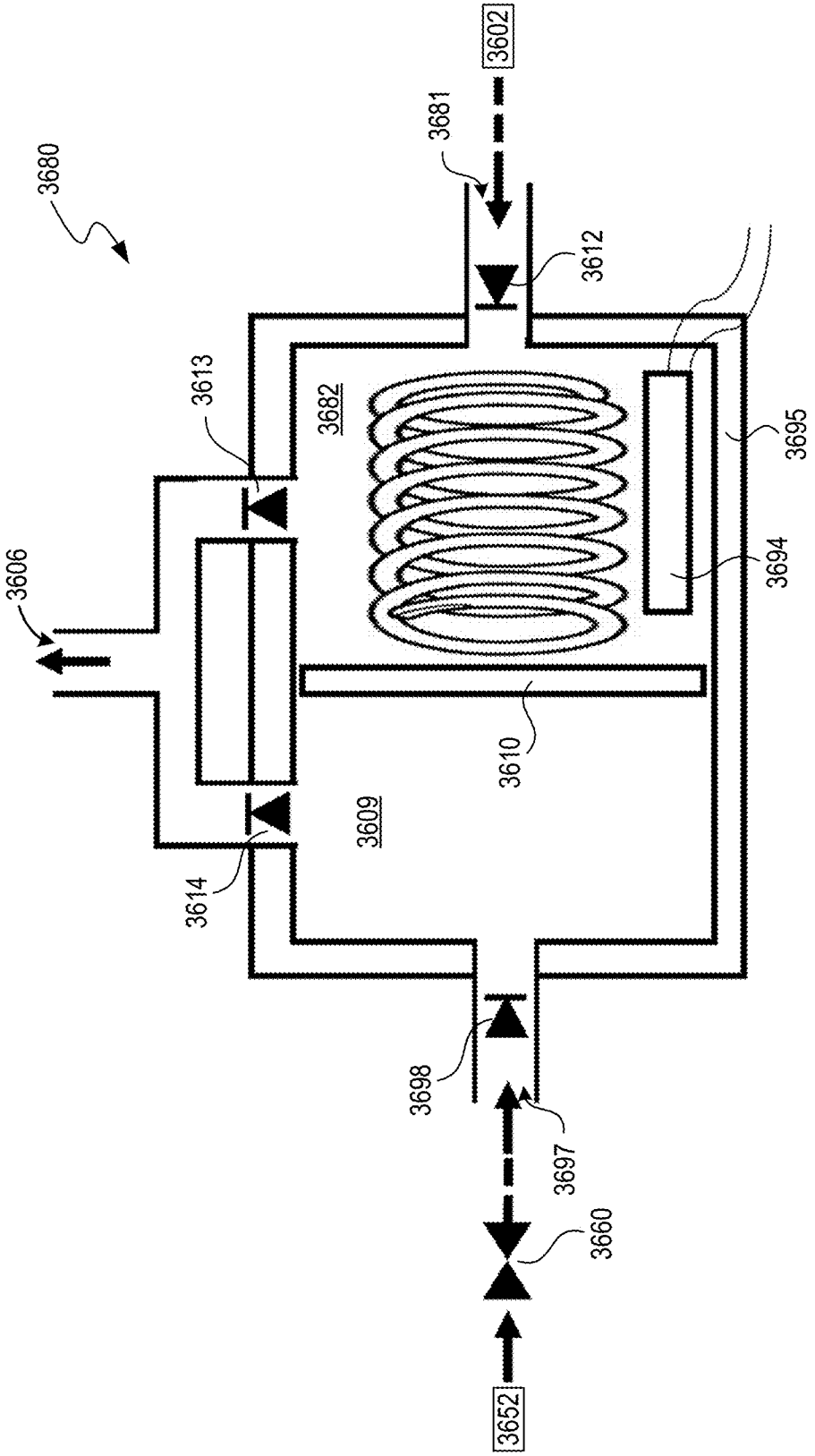
3602
3681
3680
3612
3613
3682
3695
3606
3694
3610
3609
3614
3698
3697
3660
3652

FIG. 36

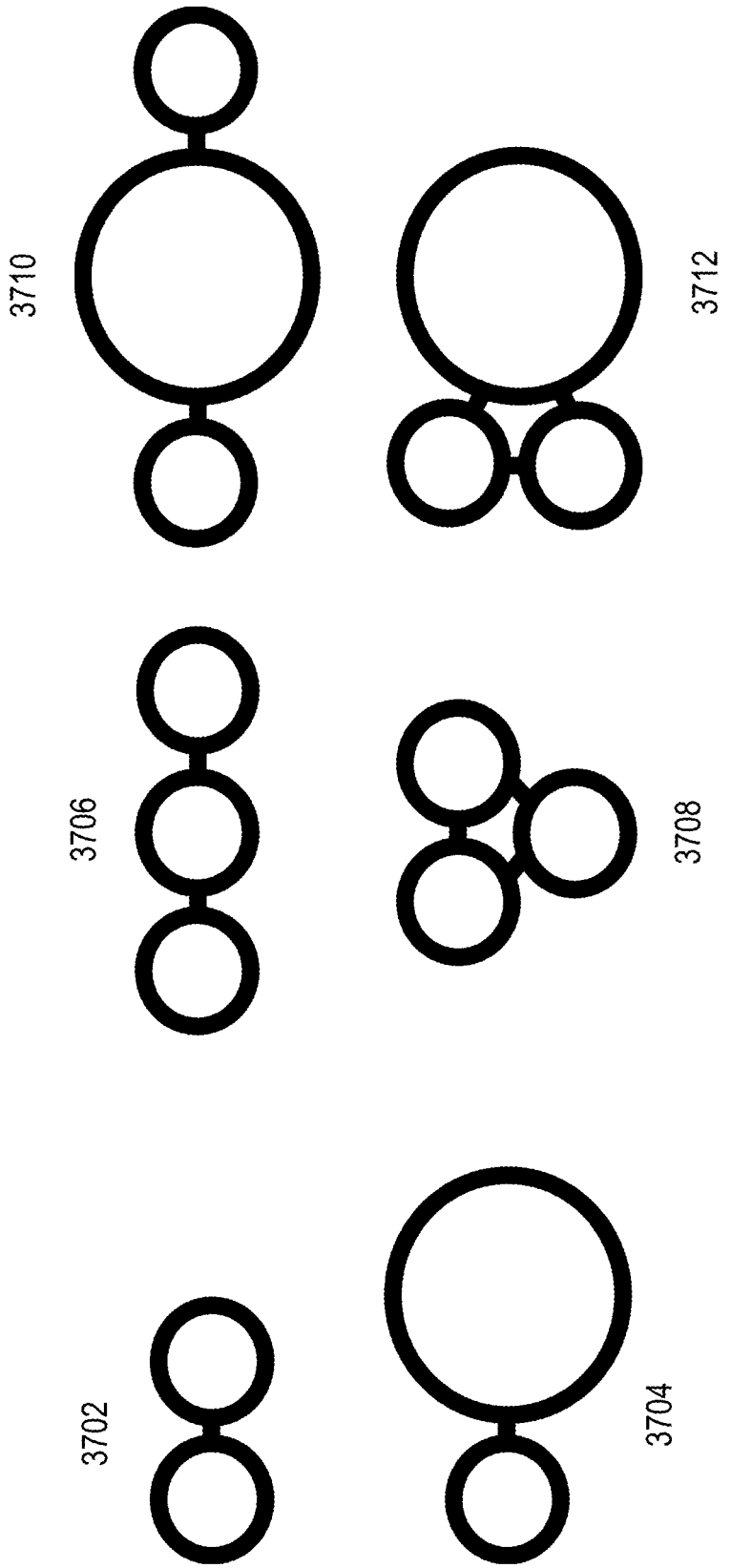

FIG. 37

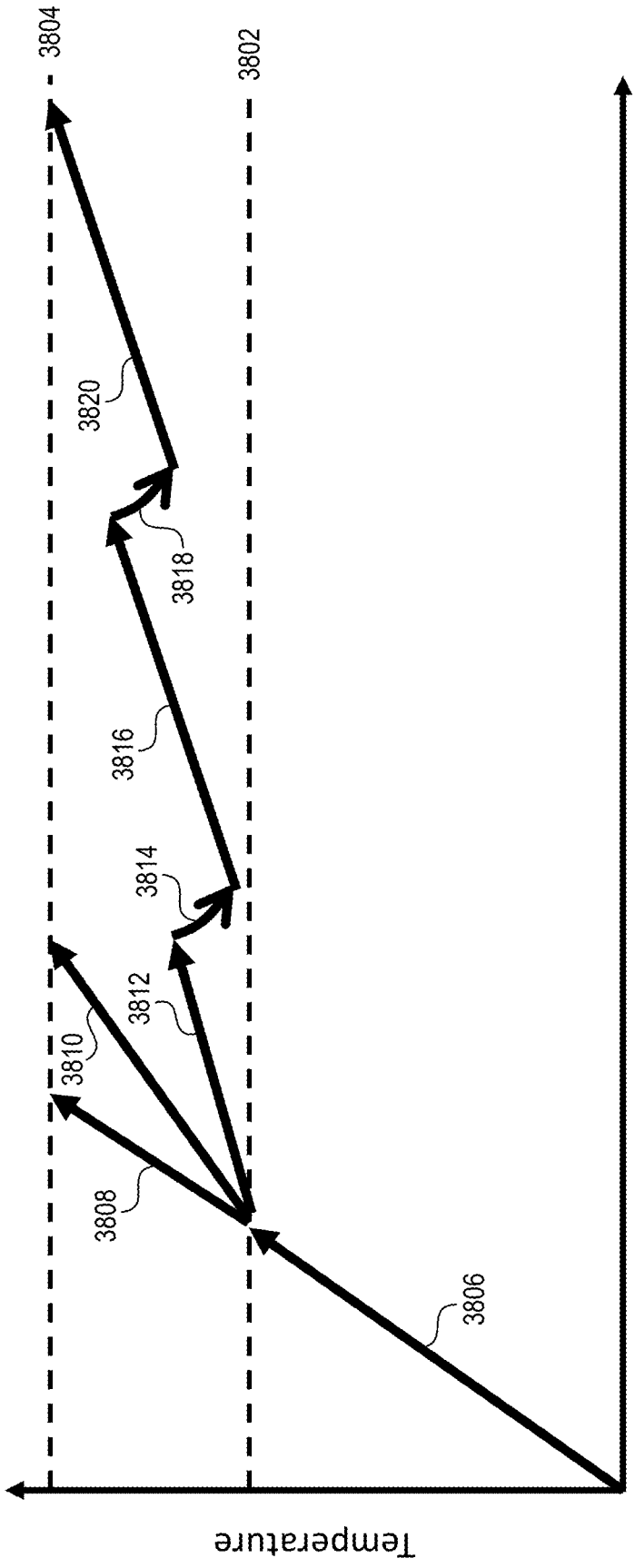
3804
3802
3820
3818
3816
3814
3812
3810
3808
3806
Time
Temperature

FIG. 38

SYSTEMS AND METHODS FOR PERCEPTION SURFACE CLEANING, DRYING, AND/OR THERMAL MANAGEMENT WITH MANIFOLDS

CROSS-REFERENCE TO RELATED APPLICATION

[0001] This application claims priority to (i) U.S. Patent Application No. 62/690,350, titled "SYSTEM FOR PERCEPTION SURFACE CLEANING AND THERMAL MANAGEMENT," and filed Jun. 27, 2018; (ii) U.S. Patent Application No. 62/717,583, titled "SELECTIVE DELIVERY OF WASHER FLUID FOR TEMPERATURE CONTROL," and filed Aug. 10, 2018; (iii) U.S. Patent Application No. 62/731,004, titled "COMBINED SYSTEM OF HEATED WASHER FLUID AND FORCED GAS DRYING FOR VEHICLE SURFACE CLEANING," and filed Sep. 13, 2018; and (iv) U.S. Patent Application No. 62/917,825, titled "ELECTRIC WASHER FLUID HEATING SYSTEM," and filed Dec. 31, 2018, each which is incorporated herein by reference in its entirety.

TECHNICAL FIELD

[0002] The present technology relates to systems and methods for cleaning vehicle components including perception surfaces, such as sensors, windshields, mirrors, headlamps, etc.

BACKGROUND

[0003] Vehicle operation requires the ability to see. Historically, this has meant that a human driver must be able to see around a vehicle they are operating to safely operate the vehicle. However, as automobiles, heavy trucks, and other vehicles have evolved over time, so too have the systems and components that enable the driver's ability to perceive the vehicle's surroundings. Examples include the invention of windshields, windshield wipers, wiper fluid, headlights, high beams, tail signals, stop signals, turn signals, marker lights, rear and side view mirrors, window defogging systems, window tinting, window shades, etc. More recently, examples include sensors like backup cameras, radar, and other advanced driver assistance systems (ADAS), which further include LIDAR, FLIR night vision, sonar, etc. It is expected that vehicles will increasingly rely on an array of perception sensors like cameras and LIDAR to "see" and navigate. Accordingly, it is expected that the safe and effective operation of vehicles will increasingly depend upon reliable functioning of such perception systems.

[0004] A vehicle's perception surfaces (e.g., windshield, mirrors, headlamps, sensors, etc.) are affected by the environment in which the vehicle operates. Common environmental obstructions include snow, ice, mud, insect splatter, and bird droppings. A vehicle can be expected to experience a variety of these situations in any given trip, leading to frequent and fast-developing changes in its ability to "see," as well as the driver's ability to see. Further, vehicles are often stored outside in ever-changing environmental situations. A common occurrence is windshield frost, which can be difficult to manually remove, and which today's vehicle systems often struggle to remove in less than ten minutes. This results in vehicles being left to cold idle, which consumes fuel, results in unnecessary vehicle emissions, and wastes drivers' time. Moreover, some drivers may start driving prematurely—before having clear and safe vision—increasing the likelihood of accidents.

[0005] Current vehicle designs may include several systems for removing obstructions from perception surfaces, such as electric heaters, warm air flow, specialized coatings, mechanical wipers, wiper fluid, vibrating surfaces, and spinning surfaces. Electric heaters, for example, often consist of thin wires embedded in surfaces to be cleared of ice (e.g., a windshield) or in materials put in contact with the surfaces, and can still require ten or more minutes to effectively clear a surface. Moreover, such heaters provide heat for deicing—but do not dissolve, mechanically remove, or mobilize other obstructions away from the surface. In some instances, such systems can add significantly to the cost of a vehicle, particularly for surfaces, such as a windshield, that may be damaged or replaced during a vehicle's lifetime.

[0006] Oppositely, wipers and fluid can dissolve, mobilize, and mechanically remove some obstructions. However, they are inadequate for many types of obstructions, and they do not provide thermal energy to hasten removal of ice, snow, bug splatter, etc. Further, washer fluid is commonly composed of water and up to 50% alcohol (methanol or ethanol) to ensure that wiper fluid does not freeze or "refreeze" after application (e.g., spraying)—which can reduce visibility and/or damage the vehicle as the frozen fluid expands. An unfortunate side effect of using alcohol is the strongly inverted correlation between temperature and fluid viscosity. Cold alcohol-water mixtures have been shown to have viscosity five (or more) times higher than warm fluid, resulting in situations where warm fluid sprays evenly across the windshield, but cold fluid trickles out and only reaches a short distance from the spray nozzles at greatly reduced flow rates. Therefore, it is highly desirable to heat washer fluid before pumping it onto perception surfaces of a vehicle.

[0007] One challenge with the use of washer fluid in surface cleaning is that washer fluid is consumed in the process. Bottled washer fluid (or additive concentrate added to water) can be expensive, requires effort to replace, and washer fluid reservoirs take space and add significant weight to a vehicle. Vehicle engineers place a high premium on the weight and volume of vehicular systems, especially when a vehicle's design borders on a weight class limit. Systems that do not efficiently use washer fluid will result in inconvenience and cost to the vehicle owner and may not be readily implemented in automotive designs by engineers. Therefore, it is highly desirable to utilize as little washer fluid as possible in cleaning perception surfaces.

[0008] Moreover, washer fluid premixes can pollute the air, ground, and water, which is becoming more problematic as the number of vehicles in the world increases (presently there are over 1 billion vehicles and growing). For example, the European Union (EU) has passed strict restrictions on the amount of antifreeze that may be in washer fluid. Therefore, vehicles in the EU commonly have warming coils, electrically heated washer hoses, and/or electrically heated nozzles to thaw and maintain washer fluid above freezing. An associated problem with efficiently providing heated fluid to perception surfaces without wasting fluid is that any tubing carrying heated washer fluid from the heating source to the point of application loses heat to the surrounding environment. Even when fluid in this tubing is very hot, it quickly cools and approaches ambient temperature. To subsequently deliver hot fluid through the tubing,

the previously cooled fluid must first be removed from the tubing (e.g., via spraying) prior to the arrival and delivery of hot fluid. Accordingly, more effective means to economize on washer fluid usage and improve the efficiency of its use have become a significant need for the future—especially where autonomous or other vehicles may include many vehicle components (e.g., 30 or more per vehicle) that require periodic cleaning.

[0009] Additionally, perception devices, such as high-resolution electronic cameras, LIDAR systems, LED lighting system, etc., generate heat that can increase the operating temperatures of these devices above their indicated operating ranges. Moreover, when temperatures rise, the lifetime and performance of such devices decrease. Similarly, other devices within a vehicle—such as those containing batteries—must be maintained within certain temperature ranges and can therefore benefit from heating. These temperature constraints often present challenges with locating and mounting the devices on a vehicle, and with the design and packaging of the devices themselves. For example, devices that tend to overheat typically require larger surface areas or even supplemental cooling fins, such as those found on the back of LED headlights.

BRIEF DESCRIPTION OF THE DRAWINGS

[0010] Many aspects of the present technology can be better understood with reference to the following drawings. The components in the drawings are not necessarily to scale. Instead, emphasis is placed on clearly illustrating the principles of the present technology.

[0011] FIG. **1** is a block diagram of a vehicle configured in accordance with an embodiment of the present technology.

[0012] FIG. **2** is a schematic illustration of a perception surface system configured in accordance with an embodiment of the present technology.

[0013] FIG. **3** is a schematic illustration of a perception surface cleaning system for cleaning one or more perception components configured in accordance with an embodiment of the present technology.

[0014] FIG. **4** is a schematic illustration of a perception surface cleaning system including an in-line heater configured in accordance with an embodiment of the present technology.

[0015] FIG. **5** is a schematic illustration of a perception surface cleaning system for selectively cleaning one or more perception components configured in accordance with an embodiment of the present technology.

[0016] FIG. **6** is a schematic illustration of a perception surface cleaning system for selectively cleaning one or more sensors with heated fluid configured in accordance with an embodiment of the present technology.

[0017] FIG. **7** is a schematic illustration of a perception surface cleaning system for selectively cleaning one or more sensors with heated fluid configured in accordance with another embodiment of the present technology.

[0018] FIG. **8** is a schematic illustration of a perception surface cleaning system for selectively cleaning one or more sensors with heated fluid configured in accordance with another embodiment of the present technology.

[0019] FIG. **9** is a schematic illustration of a perception surface cleaning system for selectively cleaning one or more sensors with heated fluid configured in accordance with another embodiment of the present technology.

[0020] FIG. **10** is a schematic illustration of a perception surface cleaning system for cleaning one or more sensors with heated fluid, and for recirculating the heated fluid, configured in accordance with an embodiment of the present technology.

[0021] FIG. **11** is a schematic illustration of a perception surface cleaning system for cleaning one or more sensors with heated fluid, and for recirculating the heated fluid, configured in accordance with another embodiment of the present technology.

[0022] FIG. **12** is a schematic illustration of a perception surface cleaning system for cleaning one or more sensors with heated fluid, and for recirculating the heated fluid, configured in accordance with another embodiment of the present technology.

[0023] FIG. **13** is a schematic illustration of a perception surface cleaning system for cleaning one or more sensors with heated fluid, and for recirculating the heated fluid, configured in accordance with another embodiment of the present technology.

[0024] FIG. **14** is a schematic illustration of a perception surface cleaning system for cleaning one or more sensors with heated fluid, and for recirculating the heated fluid, configured in accordance with another embodiment of the present technology.

[0025] FIG. **15** is a schematic illustration of a perception surface cleaning and temperature control system configured in accordance with an embodiment of the present technology.

[0026] FIG. **16** is a schematic illustration of a perception surface cleaning and temperature control system configured in accordance with another embodiment of the present technology.

[0027] FIG. **17** is a schematic illustration of a perception surface cleaning and temperature control system configured in accordance with another embodiment of the present technology.

[0028] FIG. **18** is a schematic illustration of a perception surface cleaning and drying system configured in accordance with an embodiment of the present technology.

[0029] FIG. **19** is a schematic illustration of a perception surface cleaning and drying system configured in accordance with another embodiment of the present technology.

[0030] FIG. **20** is a schematic illustration of a perception surface cleaning and drying system configured in accordance with another embodiment of the present technology.

[0031] FIG. **21** is a schematic illustration of a perception surface cleaning and drying system configured in accordance with another embodiment of the present technology.

[0032] FIG. **22** is a schematic illustration of a perception surface cleaning and drying system configured in accordance with another embodiment of the present technology.

[0033] FIG. **23** is a schematic illustration of a perception surface cleaning and drying system configured in accordance with another embodiment of the present technology.

[0034] FIG. **24** is a schematic illustration of a perception surface cleaning, drying, and thermal management system configured in accordance with an embodiment of the present technology.

[0035] FIG. **25** is a schematic illustration of a perception surface cleaning, drying, and thermal management system configured in accordance with another embodiment of the present technology.

[0036] FIG. **26** is a schematic illustration of a perception surface cleaning system including multiple, hierarchically arranged delivery systems configured in accordance with an embodiment of the present technology.

[0037] FIG. **27** is a schematic illustration of a perception surface cleaning system including multiple parallel delivery systems configured in accordance with an embodiment of the present technology.

[0038] FIG. **28** is a schematic illustration of a perception surface cleaning system including multiple delivery systems configured in accordance with another embodiment of the present technology.

[0039] FIG. **29** is a cross-sectional view of a fluid holding device configured in accordance with an embodiment of the present technology.

[0040] FIG. **30** is a cross-sectional view of a fluid heating device configured in accordance with an embodiment of the present technology.

[0041] FIG. **31** is a cross-sectional view of a fluid heating device configured in accordance with another embodiment of the present technology.

[0042] FIG. **32** is a cross-sectional view of a fluid heating and forced airflow device configured in accordance with an embodiment of the present technology.

[0043] FIG. **33** is a cross-sectional view of a fluid heating and forced airflow device configured in accordance with another embodiment of the present technology.

[0044] FIG. **34** is a partially-schematic, cross-sectional view of a fluid heating and forced airflow device configured in accordance with another embodiment of the present technology.

[0045] FIG. **35** is a partially-schematic, cross-sectional view of a fluid heating and forced airflow device configured in accordance with another embodiment of the present technology.

[0046] FIG. **36** is a partially-schematic, cross-sectional view of a fluid heating and forced airflow device configured in accordance with another embodiment of the present technology.

[0047] FIG. **37** includes several cross-sectional views of multi-lumen tubing for fluid and/or air delivery and/or recirculation configured in accordance with embodiments of the present technology.

[0048] FIG. **38** is a graph of fluid temperature versus time within a washer fluid heating chamber in accordance with embodiments of the present technology.

DETAILED DESCRIPTION

[0049] The following disclosure describes various embodiments of systems and methods for cleaning, drying, and thermally managing vehicle components, including surfaces of vehicle perception components. In some embodiments, the perception surface vehicle components can include one or more exterior surfaces of a vehicle's perception component, such as a windshield, windows, lights, mirrors, cameras, detectors, and other perception sensors or features that may need to be clean to effectively perceive the environment around the vehicle. In some embodiments, a perception surface cleaning system includes a central delivery system configured to route fluid, such as washer fluid, along one or more delivery channels to remote holding chambers. The holding chambers can hold and/or heat the fluid before delivering the fluid to nozzles that spray the fluid on nearby perception surfaces to clean the components.

[0050] Certain details are set forth in the following description and in FIGS. **1-38** to provide a thorough understanding of various embodiments of the present technology. In other instances, well-known structures, materials, operations, and/or systems often associated with vehicles, perception sensors, electromechanical systems, fluid delivery systems (e.g., valves, manifolds, etc.), etc., are not shown or described in detail in the following disclosure to avoid unnecessarily obscuring the description of the various embodiments of the technology. Those of ordinary skill in the art will recognize, however, that the present technology can be practiced without one or more of the details set forth herein, or with other structures, methods, components, and so forth.

[0051] The terminology used below is to be interpreted in its broadest reasonable manner, even though it is being used in conjunction with a detailed description of certain examples of embodiments of the technology. Indeed, certain terms may even be emphasized below; however, any terminology intended to be interpreted in any restricted manner will be overtly and specifically defined as such in this Detailed Description section.

[0052] The accompanying Figures depict embodiments of the present technology and are not intended to be limiting of its scope. The sizes of various depicted elements are not necessarily drawn to scale, and these various elements may be arbitrarily enlarged to improve legibility. Component details may be abstracted in the Figures to exclude details such as position of components and certain precise connections between such components when such details are unnecessary for a complete understanding of how to make and use the invention. Many of the details, dimensions, angles and other features shown in the Figures are merely illustrative of particular embodiments of the disclosure. Accordingly, other embodiments can have other details, dimensions, angles and features without departing from the spirit or scope of the present invention. In addition, those of ordinary skill in the art will appreciate that further embodiments of the invention can be practiced without several of the details described below.

[0053] The headings provided herein are for convenience only and do not necessarily affect the scope of the embodiments.

I. Overview

[0054] FIG. **1** is a block diagram of a vehicle **100** (e.g., an automobile) configured in accordance with an embodiment of the present technology. In the illustrated embodiment, the vehicle **100** includes a maneuvering system **102** (e.g., a system of vehicle components configured to maneuver or physically displace the vehicle) including a propulsion mechanism (e.g., an engine or a motor), a directional mechanism (e.g., steerable wheels), a deceleration mechanism (e.g., brakes, an opposing engine or motor, etc.), and/or other related components. For example, for automobiles, the maneuvering system **102** can include a drive train (e.g., an engine and a transmission), a steering system directing orientation of one or more wheels, a brake system, an external indicator system (e.g., lights corresponding to the brake or a lane-change operation), a drive-by-wire system, or a combination thereof. In other embodiments, the vehicle **100** can be a water, amphibious, or aerial vehicle, and the maneuvering system **102** could include one or of rudders,

flaps, movable propulsion mounts, or other suitable components depending on the intended environment for the vehicle.

[0055] In some embodiments, the vehicle **100** can include one or more perception components **101** including visibility features **103**. For example, the visibility features **103** can include a windshield, windows, mirrors, lights, and/or other surfaces of the vehicle **100**. Some or all of the visibility features **103** may require periodic cleaning to, for example, improve the ability of an operator of the vehicle **100** to see through the visibility features **103**. The perception components **101** also include perception sensors **108**, including cameras, detectors, and other sensors that include external perception surfaces **109** that may be exposed to the elements during operation of the vehicle.

[0056] The vehicle **100** further includes a vehicle component cleaning, drying, and/or thermal management system **110** ("cleaning system **110**"; which can also be referred to as a fluid delivery system, a perception surface cleaning system, a sensor cleaning system, etc.). The cleaning system **110** is configured to clean, dry, heat, and/or cool the sensors **108**, the perception surfaces **109**, components of the maneuvering system **102**, and/or other components of the vehicle **100** (collectively "vehicle components"). The cleaning system **110** can include one or more controllers **112** operably coupled to one or more fluid delivery components **114**, such as tubes, heaters, chillers, valves, manifolds, reservoirs, etc., as described in detail below with reference to FIGS. **2-38**. In some embodiments, all or portions of the maneuvering system **102**, the vehicle control system **104**, and/or the cleaning system **110** can be physically or functionally combined. For example, in some embodiments the vehicle **100** can include a central (e.g., single) controller for controlling both the maneuvering system **102** and the cleaning system **110**. Moreover, while the perception surfaces **109** and the sensors **108** are identified as separate components in FIG. **1**, the sensors **108** can each include a "perception surface" for receiving/transmitting signals (e.g., detecting light).

[0057] The controllers **112** of the cleaning system, and the controllers **106** of the vehicle control system can include one or more CPU(s) (processor) that can be a single processing unit or multiple processing units in a device or distributed across multiple devices. CPU can be coupled to other hardware devices, for example, with the use of a bus, such as a PCI bus or SCSI bus. In some implementations, the controllers can include a communication device capable of communicating wirelessly or hard wired, with features, such as sensors, valve manifolds as discussed below, or other features related to the vehicle. The CPU can have access to a memory in a device or distributed across multiple devices. A memory includes one or more of various hardware devices for volatile and non-volatile storage, and can include both read-only and writable memory. For example, a memory can comprise random access memory (RAM), CPU registers, read-only memory (ROM), and writable non-volatile memory, such as flash memory, hard drives, floppy disks, CDs, DVDs, magnetic storage devices, tape drives, device buffers, and so forth. A memory is not a propagating signal divorced from underlying hardware; a memory is thus non-transitory. Memory can include program memory that stores programs and software, such as an operating system, adaptive training system, and other application programs. Memory can also include data memory that can include power measurements, windowing data points, critical power or finite work capacity determinations, parameterized transformations for various workouts in terms of work, adaptive workout programs based on ability functions, configuration data, settings, user options or preferences, etc., which can be provided to the program memory or any element of the vehicle component of the cleaning, drying and/or thermal management system **110** of the present technology.

[0058] In some embodiments, the cleaning system **110** is configured to selectively deliver fluid (e.g., washer fluid, air, etc.) to one or more of the perception surfaces **109** to thereby clean the perception components **101**. In some embodiments, the cleaning system **110** pumps washer fluid and/ or air and delivers it to one or more selected channels by, for example, opening or closing of one or more valves. The valves may be located distant from each other or may be co-located such as on a shared manifold. In some embodiments, the control of flow in each channel may also be directed through adjusting the position of a rotary valve. Each channel comprises a fluid conduit through which the fluid flows when pumped, delivering it to a nozzle or other application device to clean one or more of the vehicle components. The fluid may be heated prior to the pump, in between the pump and the one or more valves, or anywhere along the length of the conduit carrying the fluid from the one or more valves to the point of delivery. In some embodiments, the cleaning system **110** may include a recirculating function whereby warmed fluid may be routed through a channel to a position proximate to its desired delivery point, and fluid located at that point, which may have cooled over time, may be routed to return to the washer fluid reservoir.

[0059] In some embodiments, the cleaning system **110** is configured to selectively deliver a cooling fluid (e.g., washer fluid, air, etc.) to one or more of the perception components **101**, such as the sensors **108** or other vehicle components, for thermal management (e.g., cooling or heating). In some embodiments, the cleaning system **110** can pump and deliver a cooling fluid, either at ambient temperature or chilled by a fluid chiller, to one or more selected channels by opening or closing selected valves. Each channel comprises a conduit through which the cooling fluid flows when pumped, delivering it to a heat exchanger located at the vehicle component to be cooled. In some embodiments, the fluid chiller may be a discrete device or may leverage an air conditioning system of the vehicle **100** to chill the fluid and/or to provide dehumidified air. In some embodiments, the cooling fluid may traverse a recirculating path—wherein the cooling fluid (i) is delivered from a central reservoir to the vehicle component to be chilled to absorb heat from the component and (iii) subsequently returned to the central reservoir.

[0060] In some embodiments, the cleaning system **110** is configured to deliver fluid to one or more of the vehicle components for both cleaning and thermal management. For example, one channel with a single lumen can be configured to carry heated or cool washer fluid, and heated or cooled air. The air may be ambient air and/or dehumidified drying air, which may be provided via vehicle's air conditioning system. In another example, one or more channels carrying cooling fluid and/or air can be co-routed with one or more channels carrying heated washer fluid, simplifying installation and routing of the cleaning system **110** within the vehicle **100**. In some embodiments, the same fluid is operative at the same temperature for both "warming" (e.g., permitting an effective occlusion wash and dry function) and

for "cooling" (e.g., for inhibiting one or more of the sensors **108**, such as cameras, from getting too hot). In another embodiment, one or more channels can be configured to carry a flow of air (ambient or dehumidified drying air) that is delivered to a perception surface of, as an example, a sensor **108**.

[0061] In some embodiments, the cleaning system **110** is further configured to carry and deliver forced air (heated, dried (i.e., dehumidified), or ambient air) for delivery to destination points proximate to the destination points of the heated washer fluid and the cooling fluid (e.g., to the sensors **108**). For example, forced air may be used to dry the surface of one of the sensors **108** after it has been cleaned by the delivery of washer fluid. In some embodiments, the channels for forced air, washing fluid, and cooling fluid can be coaxially located on the same conduit—for example, where the inner channel carries washer fluid and the outer channel carries air. The proximity of the channels can advantageously allow heat transfer between the air and the liquid washer fluid.

[0062] In some embodiments, the vehicle control system **104** and/or the cleaning system **110** are configured as a closed-loop system. For example, the sensors **108** can communicate with (e.g., send signals to) the controller(s) **106** of the vehicle control system **104** and/or the controller(s) **112** of the cleaning system **110** when the sensors **108** become occluded, exceed a threshold temperature, etc. That is, for example, the vehicle control system **104** and/or the cleaning system **110** can recognize that a particular one of the sensors **108** is not seeing properly, declare a fault, and initiate an attempt to clear the fault. To clear the fault, the cleaning system **110** can deliver washer fluid and/or forced air to the surface of the sensor **108** to clean the surface, and the vehicle control system **104** can check the signal coming from the sensor **108** to determine whether the obstruction has been cleared. Alternatively or additionally, the vehicle control system **104** can engage the cleaning system **110** on a periodic basis without determining that an obstruction exists. For example, forced air may be applied in response to a fault, or it may be applied periodically, or even constantly as the flow of air over the sensor surface may reduce the likelihood that the sensor becomes obstructed. Similarly, the cleaning system **110** can provide cooling on a periodic basis, or cooling may be provided on a periodic basis in which the period varies with the activity of the particular one of the sensors **108**, with an ambient temperature, etc. In some embodiments, for example where the vehicle control system **104** is not fully autonomous, the operator of the vehicle **100** may make the determination that one of the vehicle components (e.g., a backup camera, windshield, etc.) needs cleaning, and may engage with the vehicle **100** to trigger the cleaning system **110** to clean the sensor **108** or perception surface.

II. Selected Embodiments of Vehicle Component Cleaning Systems

[0063] In some embodiments of the present technology, a cleaning system (e.g., the cleaning system **110**) can be configured to heat and deliver fluid, such as washer fluid, to one or more vehicle components (e.g., the sensors **108** and/or the perception surfaces **109**) to clean the vehicle components. In some embodiments, the cleaning system **110** can include a centralized heater that heats the washer fluid at a single location and then moves the heated fluid to the point of delivery. In one aspect of the present technology, such a centralized approach can reduce the number of required components. In another aspect of the present technology, a centralized heater enables parasitic heat recovery from other localized heat sources, such as various components of the maneuvering system **102** (e.g., an internal combustion engine of the vehicle **100**, an exhaust system of the vehicle **100**, a warm battery encasement of the vehicle **100**, etc.) However, the washer fluid will cool as it moves from the centralized heater to the point of delivery, and will cool more the longer it takes to deliver the washer fluid.

[0064] In other embodiments, the cleaning system **110** can heat the washer fluid in a decentralized manner, where ambient temperature fluid is moved to the desired application point (or near to it), and then heat is applied. In one aspect of the present technology, this decentralized approach benefits from less heat loss before delivery but can require relatively more components than a centralized heating system. Additionally, it is more difficult to provide a high temperature source for heat exchange to a distributed collection of application points.

[0065] The cleaning system **110** typically heats the washer fluid by electric resistance heating, or by heat exchange from a high temperature source. Electric heating utilizes electric power from the vehicle **100**, which is often tightly controlled and not widely available, and the generation of which can adversely affect the efficiency of the vehicle **100**. Because of this, electric washer fluid heaters are typically of relatively low continuous power. However, such electric heaters also have the advantage of being able to apply that power even when the vehicle **100** is cold, as it may be when starting vehicle operation. By contrast, parasitic heating, or the recovery of waste heat from the vehicle **100** via a heat exchanger, can often provide many times as much heating power as electric heaters. Additionally, as vehicles often have whole systems designed to get rid of the waste heat, recovery of a small amount has little to no effect on the vehicle **100**. However, these heaters generally require a high temperature heat source, which may not be available for several minutes following vehicle start. Accordingly, in some embodiments the cleaning system **110** includes a hybrid parasitic-electric fluid heater that utilizes both electric heating and parasitic heating. For example, the cleaning system **110** can utilize the electric heater when the heat exchanger cannot provide heat (e.g., during and immediately after the vehicle **100** is started), and can then shut off or minimize the electricity draw from the vehicle **100** and rely on the plentiful waste heat once the vehicle **100** provides heat (e.g., after the vehicle **100** has warmed up).

[0066] The washer fluid is typically brought into the cleaning system **110** at ambient temperature. In some embodiments, the cleaning system **110** heats the washer fluid in-line—in which all pumped fluid passes through the heater. For an electric heater, the electric current can be shut off if no heating is desired. However, for a parasitic heat exchanger heater, all fluid flowing through the heat exchanger will exchange heat. In some embodiments, the cleaning system **110** can include a valving system configured to control the flow of the washer fluid to selectively direct all of the washer fluid to the heater or to bypass the heater, or to direct part of the fluid to the heater, part to bypass the heater, and then recombine the flows.

[0067] In some embodiments, the cleaning system **110** includes distributed electric heaters. In such embodiments,

ambient temperature fluid can be pumped through a rotary valve to select a distribution channel, and thereby to select a desired vehicle component destination for the fluid. Just before arrival at the point of application, one of the distributed electric heaters can selectively heat the fluid. For example, heating can be applied through an electric resistance heating element to a small volume of fluid in an in-line chamber located close to a spray nozzle. This volume is sized to hold the approximate amount of fluid expected to be used in cleaning that channel's perception surface. Generally, the larger the surface to be cleaned, the larger the in-line heated fluid volume. For example, the cleaning system **110** may be designed to apply between 0.5-3 milliliters of heated fluid per square centimeter of area.

[0068] The cleaning system **110** can include sensors to measure the fluid temperature in the in-line chamber as well as in the electric heating elements. A centralized controller (e.g., one or more of the controllers **106** and/or **112**) can receive the temperature signals from each channel's sensors and apply or shut off electric current to the channel's heating element such that desired temperatures are achieved. In some embodiments, instead of controlling fluid temperature within the in-line heating chamber using sensors and a controller, a positive temperature coefficient heater may be used which self-limits temperature by reducing heating as temperatures rise. Heaters can be designed to apply enough power to heat fluid from ambient to the desired delivery temperature in a desired amount of time, usually less than 60 seconds. This enables the vehicle components to be repetitively cleaned with properly heated fluid. In some embodiments, the centralized controller can selectively apply current to the channels' heaters to maintain electric power usage within desired limits. In other embodiments, heating may alternatively be applied to the tubing or conduit carrying fluid towards a nozzle.

[0069] In some embodiments, the cleaning system **110** can include multiple fluid channels that can be selected for fluid delivery to different ones of the vehicle components via operation of a collection of solenoid valves (e.g., a manifold). The controller **106** and/or the controller **112** can monitor power usage on each channel and choose whether to provide power to each channel.

[0070] FIGS. **2-9** are schematic illustrations more specifically illustrating various embodiments of closed-loop control cleaning systems (e.g., sensor cleaning systems) for cleaning one or more vehicle components (e.g., perception sensors) configured in accordance with embodiments of the present technology. The detailed description of each embodiment focuses mainly on those components that are new/different as compared to other embodiments. However, one skilled in the art will appreciate that the various embodiments can (i) include the same or generally similar features (e.g., components, configurations, etc.), (ii) operate the same or generally similarly, and/or (iii) that the various embodiments can be combined. Moreover, one of ordinary skill in the art will appreciate that the number of components can vary in the following embodiments. For example, the systems of the present technology can have any number of delivery channels, return channels, sensors, heaters, chillers, heat exchangers, nozzles, etc.

[0071] FIG. **2** is a schematic illustration of a perception surface cleaning system (e.g., a fluid delivery system) **210** configured in accordance with an embodiment of the present technology. In the illustrated embodiment, a washer fluid pump **204** is configured to pump washer fluid **201** from a reservoir **202** through a delivery channel **228** to a nozzle **217**. The nozzle **217** is configured to spray the washer fluid onto the perception surface to clean the sensor **218**. In other embodiments, the nozzle **217** can be configured to spray and clean the surface of another perception feature, such a window, windshield, mirror, or other perception component, instead of or in addition to the sensor **218**. In the illustrated embodiment, a controller **224** is operably/communicatively coupled to the pump **204** and the sensor **218**. The controller **224** can receive signals from the sensor **218** or otherwise determine that the sensor **218** is occluded and can selectively engage the pump **204** to clean the sensor **218** (e.g., the perception surface of the sensor **218**). In some embodiments, the controller **224** can selectively engage the pump **204** by controlling an on/off state of the pump **204**. In other embodiments, the controller **224** can selectively engage the pump **204** by controlling/selecting a desired pumping flow rate corresponding to a level of sensor occlusion, an ambient temperature, an amount of fluid **201** remaining in the reservoir **202**, and/or other conditions. By this arrangement, the system **210** is configured for closed-loop control and operation.

[0072] FIG. **3** is a schematic illustration of a vehicle component cleaning system **310** for cleaning one or more sensors **318** configured in accordance with an embodiment of the present technology. In the illustrated embodiment, a washer fluid pump **304** is configured to pump washer fluid **301** from a reservoir **302** and along a delivery channel **328** to a flow splitter **303**. The flow splitter **303** splits the flow of washer fluid **301** for delivery to a plurality of nozzles **317** configured (e.g., positioned and shaped) to deliver the fluid **301** to/onto corresponding ones of the sensors **318**. While the flow splitter **303** is shown as splitting the fluid flow to three nozzles **317** in FIG. **3**, in other embodiments the flow splitter **303** can split the delivery channel **328** into any number of sub-channels. In the illustrated embodiment, a controller **324** is operably/communicatively coupled to the pump **304** and the sensors **318**. When the controller **324** determines that any of the sensors **318** are occluded, the controller **324** may selectively engage the pump **304** (e.g., by controlling an on/off state, pumping rate, etc., of the pump **304**) to clean the surfaces of all the sensors **318**. By this arrangement, the system **310** is configured for closed-loop control and operation.

[0073] FIG. **4** is a schematic illustration of a perception surface cleaning system **410** including an in-line heater **412** configured in accordance with an embodiment of the present technology. In the illustrated embodiment, a washer fluid pump **404** is configured to pump washer fluid **401** (i) from a reservoir **402** to the heater **412** and (ii) from the heater **412** along a delivery channel **428** to a nozzle **417**. The nozzle **417** is configured to spray the surface of a perception sensor **418** or another vehicle component to clean the sensor **418** or other vehicle component. In the illustrated embodiment, a controller **424** is operably coupled to the sensor **418**, the heater **412**, and a temperature sensor **425** configured to measure/sense/detect a temperature of the fluid **401** at and/or proximate to the heater **412**. When the controller **424** determines that the surface of the sensor **418** is occluded, the controller **424** can selectively engage the pump **404** to clean the surface of the sensor **418**. The controller **424** can also receive one or more temperature signals from the temperature sensor **425** and/or the heater **412** and may selectively

engage the heater **412** based on the measured temperature, the sensed occlusion of the perception sensor **418**, and/or on some other input or combination of inputs to heat the fluid **401** to a desired temperature. In some embodiments, the controller **424** selectively engages the heater **412** by controlling an on/off state of the heater **412**, changing a power state of the heater **412**, etc. By this arrangement, the system **410** is configured for closed-loop control and operation.

[0074] FIG. **5** is a schematic illustration of a perception surface cleaning system **510** for selectively cleaning one or more sensors **518** configured in accordance with an embodiment of the present technology. In the illustrated embodiment, a washer fluid pump **504** is configured to pump washer fluid **501** from a reservoir **502** to a delivery system **506** (e.g., a manifold, a valve system, etc.) having a plurality of distribution valves **508**. The valves **508** can be selectively opened/closed to permit the fluid **501** to flow along one or more delivery channels **528** to nozzles **517** configured to deliver the fluid **501** onto corresponding ones of the sensors **518** to clean the sensors **518**. In the illustrated embodiment, a controller **524** is operably coupled to the delivery system **506** and to the sensors **518**. When the controller **524** determines that one or more of the sensors **518** are occluded, the controller **524** can selectively engage the pump **504** and the associated distribution valves **508** to route the fluid **501** to the nozzles **517** corresponding to the occluded sensors **518** to clean the corresponding occluded sensors **518**. In one aspect of the present technology, the system **510** can selectively clean only those sensors **518** that are occluded—reducing the amount of the washer fluid **501** consumed during operation. The controller **524** can be configured to apply one or more pulses of washer fluid to the occluded sensor **518** and then communicate with the sensor **518** after each pulse to determine whether the perception surface of the sensor **518** has been adequately cleaned. If not, additional pulses of washer fluid can be directed onto the sensor **518**.

[0075] FIG. **6** is a schematic illustration of a perception surface cleaning system **610** for selectively cleaning one or more sensors **618** with heated fluid configured in accordance with an embodiment of the present technology. In the illustrated embodiment, a washer fluid pump **604** is configured to pump washer fluid **601** (i) from a reservoir **602** to an in-line heater **612** and (ii) from the in-line heater **612** to a delivery system **606** (e.g., a manifold, a valve system, etc.) having a plurality of distribution valves **608**. The valves **608** can be selectively opened to permit the fluid **601** to flow to one or more nozzles **617** configured to deliver the fluid **601** onto corresponding ones of the sensors **618** to clean the sensors **618**. In the illustrated embodiment, the controller **624** selectively activates one distribution valve **608** at a time to maintain adequate fluid flow rate and pressure within the system. In other embodiments, the controller **624** may activate more than one distribution valves simultaneously. In the illustrated embodiment, a controller **624** is operably coupled to the heater **612**, a temperature sensor **625** configured to detect the temperature of the fluid **601** at and/or proximate to the heater **612**, the delivery system **606**, and the sensors **618**. When the controller **624** determines that one or more of the perception sensors **618** are occluded, the controller **624** can selectively engage the pump **604** and the associated one or more of the distribution valves **608** to route the fluid **601** to the nozzles **617** corresponding to the occluded sensors **618** to clean the corresponding occluded sensors **618**. The controller **624** can also receive one or more temperature signals from the temperature sensor **625** and/or the heater **612** and can selectively engage the heater **612** based on the measured temperature, the sensed occlusion of the sensors **618**, and/or on some other input or combination of inputs.

[0076] FIG. **7** is a schematic illustration of a perception surface cleaning system **710** for selectively cleaning one or more sensors **718** with heated fluid configured in accordance with another embodiment of the present technology. In the illustrated embodiment, a washer fluid pump **704** is configured to pump washer fluid **701** from a reservoir **702** to a delivery system **706** (e.g., a manifold, valve system, etc.) having a plurality of distribution valves **708**. A washer fluid heater **712** is arranged in parallel to the delivery system **706**. The delivery system **706** is configured to (i) selectively route the fluid **701** to the heater **712** for heating, (ii) subsequently receive the heated fluid **701** from the heater **712**, and (iii) selectively route the heated/unheated fluid **701** from the delivery system **706** to one or more nozzles **717** configured to deliver the fluid **701** onto corresponding ones of the sensors **718** to clean the sensors **718**.

[0077] In the illustrated embodiment, a controller **724** is operably coupled to the heater **712**, a temperature sensor **725**, the delivery system **706**, and the sensors **718**. In some embodiments, the controller **724** can control the delivery system **706** and the pump **704** to selectively route all the fluid **701** to the heater **712** or to bypass the heater **712** and remain unheated. In other embodiments, the delivery system **706** may direct only a first portion of the fluid **701** to the heater **712** for heating. The first portion can subsequently mix with a remaining second portion of the fluid **701** that bypasses the heater **712** within a volume of the delivery system **706** to achieve a fluid temperature in between that of the fluid **701** exiting the washer fluid reservoir **702** and the fluid **701** exiting the heater **712**. For example, in some embodiments the delivery system **706** may contain a variable aperture valve to direct a portion of the washer fluid to the heater **712**. In other embodiments, the delivery system **706** can include a three-way valve that selectively connects (e.g., based on a control signal from the controller **724**) the pump **704** to (i) the volume within the delivery system **706** and the distribution valves **708** or (ii) the heater **712**. In yet other embodiments, the various valves of the delivery system **706** can be individually controlled solenoid valves or may be combined into a rotary valve system.

[0078] When the controller **724** determines that one or more of the perception sensors **718** are occluded, the controller **724** can selectively engage the pump **704** and the associated one or more of the distribution valves **708** to route the fluid **701** to the nozzles **717** corresponding to the occluded sensors **718** to clean the corresponding occluded sensors **718**. The controller **724** can also receive one or more temperature signals from the temperature sensor **725** and/or the heater **712** and can selectively engage the heater **712** and/or the delivery system **706** based on the measured temperature to control the temperature of the fluid **701**.

[0079] FIG. **8** is a schematic illustration of a perception surface cleaning system **810** for selectively cleaning one or more sensors **818** with heated fluid configured in accordance with another embodiment of the present technology. In the illustrated embodiment, a washer fluid pump **804** is configured to pump washer fluid **801** from a reservoir **802** to a delivery system **806** (e.g., a manifold, valve system, etc.)

having a plurality of distribution valves **808**. The valves **808** can be selectively opened to permit the fluid **801** to be pumped to one or more fluid heaters **812** and from the fluid heaters **812** to corresponding nozzles **817** configured to deliver the fluid **801** onto corresponding ones of the sensors **818** to clean the sensors **818**. In one aspect of the present technology, the fluid heaters **812** are located at or proximate to the corresponding nozzles **817**. In some embodiments, this can reduce the amount of energy needed to heat the fluid **801** since the fluid **801** will not decrease in temperature much between the heaters **812** and the nozzles **817** as compared to, for example, systems with a centralized heater (e.g., the embodiments illustrated in FIGS. **6** and **7**). In some embodiments, the fluid heaters **812** can have features generally the same as or similar to those of the fluid heating devices described in detail below with reference to FIGS. **30-36**.

[0080] In the illustrated embodiment, a controller **824** is operably coupled to the heaters **812**, temperature sensors **825** configured to measure the temperature of the fluid **801** at or proximate to the heaters **812** (e.g., within the heaters **812**), the delivery system **806**, and the sensors **818**. When the controller **824** determines that one or more of the perception sensors **818** are occluded, the controller **824** can selectively engage the pump **804** and the associated one or more of the valves **808** to route the fluid **801** (i) to the heaters **812** to heat the fluid **801** and (ii) from the heaters **812** to the nozzles **817** corresponding to the occluded sensors **818** to clean the corresponding occluded sensors **818** with the heated fluid **801**. The controller **824** can also receive one or more temperature signals from the temperature sensors **825** and/or the heaters **812** and can selectively engage the heaters **812** based on the measured temperatures, the sensed occlusion of the sensors **818**, and/or on some other input or combination of inputs to vary the temperature of the fluid delivered from the nozzles **817**.

[0081] FIG. **9** is a schematic illustration of a perception surface cleaning system **910** for selectively cleaning one or more sensors **918** with heated fluid configured in accordance with another embodiment of the present technology. In the illustrated embodiment, a washer fluid pump **904** is configured to pump washer fluid **901** from a reservoir **902** to a delivery system **906** (e.g., a manifold, a valve system, etc.) having a plurality of distribution valves **908**. A washer fluid heater **912** is arranged in parallel to the delivery system **906**. In the illustrated embodiment, the heater **912** is a parasitic heater (e.g., a heat exchanger) configured to heat the fluid **901** by transferring/exchanging heat generated from another system, such as a vehicle engine **914**, to/with the fluid **901**. More specifically, for example, heat can be provided to the heater **912** by circulation of a higher temperature fluid, such as engine coolant carrying heat away from the engine **914**, or coolant carrying heat away from other vehicular systems needing to be cooled, such as batteries or other electronics in an electric vehicle. For example, the heater can utilize heat from the engine's coolant system, as described in U.S. Pat. Nos. 8,550,147 and 8,925,620, or in U.S. Patent Application Publication No. 2018/0162327, all of which are incorporated herein by reference. The valves **908** and/or other valves (e.g., a three-way valve) can be selectively opened/closed to permit the fluid **901** to flow (i) to the heater **912** for heating, (ii) subsequently back into the delivery system **906** from the heater **912**, and/or (iii) from the delivery system **906** and along one or more parallel delivery channels **928** to one or more nozzles **917**, which are configured to deliver the fluid **901** onto corresponding ones of the sensors **918** to clean the sensors **918**.

[0082] In the illustrated embodiment, a controller **924** is operably coupled to the pump **904**, a temperature sensor **925** configured to sense the temperature of the fluid **901** in and/or proximate to the delivery system **906**, the delivery system **906**, and the sensors **918**. In some embodiments, the controller **924** can control the valves **908** and the pump **904** to selectively route all the fluid **901** to the heater **912** or to bypass the heater **912** and remain unheated. In other embodiments, the delivery system **906** may direct only a first portion of the fluid **901** to the heater **912** for heating. The first portion can subsequently mix with a remaining second portion of the fluid **901** that bypasses the heater **912** to achieve a fluid temperature in between that of the fluid **901** exiting the reservoir **902** and the fluid **901** exiting the heater **912**. For example, the delivery system **906** may contain a variable aperture valve to direct a portion of the washer fluid to the heater **912**. When the controller **924** determines that one or more of the perception sensors **918** are occluded, the controller **924** can selectively engage the pump **904** and the associated one or more of the distribution valves **908** to route the fluid **901** to the nozzles **917** corresponding to the occluded sensors **918** to clean the corresponding occluded sensors **918**. The controller **924** can also receive one or more temperature signals from the temperature sensor **925** and can selectively engage the delivery system **906** based on the measured temperature and/or other inputs, parameters, etc., to control the temperature of the fluid **901**.

III. Selected Embodiments of Perception Surface Cleaning Systems Configured to Recirculate Heated Fluid

[0083] Referring again to FIG. **1**, in some embodiments of the present technology a cleaning system (e.g., the cleaning system **110**) can be configured to heat and deliver fluid, such as washer fluid, to one or more vehicle components such as the perception components **101** (e.g., the sensors **108** and/or the perception features **103**) to clean the perception surfaces **109** while also recirculating the heated fluid and maintaining the heated fluid proximate to the vehicle components. For example, heat can be applied to the fluid in a centralized location and subsequently moved to a location near to a desired application point. Periodically, as the fluid cools, the cleaning system **110** can move newly heated fluid to the location near the application point and return the cooled fluid to a centralized reservoir (e.g., proximate to the heater). In one aspect of the present technology, such an approach ensures that properly heated fluid is positioned at the application point, while also prewarming the fluid reservoir. However, such an approach requires periodic pumping to recirculate the fluid and some level of valving to control the flow, and therefore may be best suited for systems where heating is plentiful and not costly to the performance of the vehicle **100**.

[0084] In some embodiments, the cleaning system **110** includes a "hybrid" heating source that transfers heat to the fluid via the combination of a heat exchanger and an electric resistance heating element. The heat exchanger provides heat from a hot coolant flow to the washer fluid. The electric heating element provides supplemental heating when it is desired. For example, when the vehicle **100** is first started, the coolant may not be at a high enough temperature to

adequately heat the washer fluid via the heat exchanger, and so supplemental heating using the electric heating element may be desired. However, during operation of the vehicle **100**, the heat exchanger may provide sufficient heating without the need for supplemental heating via the electric heating element.

[0085] In some embodiments, the cleaning system **110** includes a rotary valve which directs the flow of heated fluid to a selected channel. Each channel can be coupled to a distribution nozzle configured to spray and clean a vehicle component. In operation, when a channel is selected, heated fluid flows along the channel's conduit to a point very close to the distribution nozzle, wherein it enters a small holding chamber which can be better insulated than the conduit. The volume of the holding chamber can be sized to hold the approximate amount of fluid expected for one or two pulses of fluid delivery to be used in cleaning that channel's perception sensor or perception surface (e.g., the larger the surface to be cleaned, the larger the volume). For example, the cleaning system **110** (e.g., the holding chambers) may be designed to apply between 0.5-3 milliliters per square centimeter of area during a single cleaning spray. The holding chamber can also include a heating element, such as an electric heating element configured to heat the small volume of fluid within the chamber for delivery to the associated perception surface **109**. In such a configuration, the power draw required to heat the small volume of fluid is minimal.

[0086] In some embodiments, individual ones of the holding chambers can have one inlet port through which heated fluid enters, and two outlet ports. The first outlet port can connect to a conduit which returns fluid back to the rotary valve, and from there to a washer fluid reservoir. In some embodiments, the conduit carrying heated fluid to the holding chamber and the conduit carrying fluid back to the rotary valve can be combined in a dual-lumen tube to simplify mounting and routing of the tubing within the vehicle **100**. The second outlet port of the holding chamber can carry heated fluid from the holding chamber to a valve, and from the valve to the distribution nozzle. In some embodiments, the valve is a one-way valve which requires an elevated pressure to open. In operation, the rotary valve can selectively recirculate fluid through a selected channel by (i) opening flow from the rotary valve to the holding chamber and (ii) opening a valve in the fluid path of the conduit returning fluid back to the rotary valve, while a recirculation pump is operating. To spray fluid from a distribution nozzle, the rotary valve can (i) open the flow to the selected channel but (ii) close the valve in the fluid path of the conduit returning fluid back to the rotary valve, while the pump is operating. In this case, pressure in the conduit exceeds the pressure required to open the one-way valve positioned near the distribution nozzle, causing the valve to open, and driving the fluid through the nozzle. As the heated fluid from the holding chamber is dispensed, additional fluid is pumped from the main fluid reservoir, through the heater (e.g., the parasitic heater), through the valve manifold, to the holding chamber and toward the nozzle. Once the one-way valve near the distribution nozzle is closed, the flow of fluid will refill the holding chamber.

[0087] In some embodiments, each return channel is fit with a one-way check valve and connected into one common flow path such that flow through individual ones of the return channels can be opened or closed by a single, common return valve in the common flow path. The return valve—which closes during spraying—can be an elastomeric open bill duckbill valve which faces the bill into the flow stream and automatically self closes upon facing a high flow generated by the (e.g., more powerful) spraying pump. In some embodiments, the one-way check valves are selected in combination with the diameter of the return flow tubing to ensure that the restriction in the return flow paths is less than the pressure required to open the one-way valves positioned proximate to the distribution nozzles. In some embodiments, a centralized controller operates the washer fluid pump and the valves. In other embodiments, controllable check valves can be used that allow multiple return channels to be combined and controlled, for example by a single solenoid valve connected to the controller. The controller can receive an ambient temperature signal from a sensor positioned near one of the holding channels or from the vehicle **100**, and can use a preset function or look-up table to select the frequency and length of time each channel should be recirculated to maintain temperatures in the holding chambers within desired targets.

[0088] In other embodiments, the cleaning system **110** can include a central, electric heating element or heat exchanger instead of a hybrid system. In such embodiments, the selective distribution of washer fluid to channels may be accomplished by a collection of solenoid valves, which may be collectively located on one or more flow manifolds. The holding chambers may be replaced with Y- or T-shaped branches in the flow path, such that hot fluid is simply held in the line feeding into the junction. A check valve before the nozzle may be replaced with a controlled solenoid valve. Each return tube may be equipped with its own return valve. Each channel may be equipped with a temperature sensor connected to a central controller to enable direct monitoring of temperature before the valve and decision making as to frequency of recirculation of that channel. Additionally, as semi-warmed fluid may be returned to the washer fluid reservoir, temperature sensors may measure the temperature of the coolant entering and exiting the heating source, and that information may be utilized in determining frequency of recirculation. Alternatively, a single temperature sensor could be added to the common return tube, after each return tube's check valve and after the flow paths have been combined into a single path. By measuring this temperature while recirculating fluid, the system may adaptively learn the appropriate frequency of recirculation of that channel.

[0089] FIGS. **10-14** are schematic illustrations more specifically illustrating various embodiments of closed-loop control cleaning systems (e.g., sensor cleaning systems) for cleaning one or more vehicle components (e.g., perception sensors) while recirculating heated fluid configured in accordance with embodiments of the present technology. The detailed description of each embodiment focuses mainly on those components that are new/different as compared to other embodiments. However, one skilled in the art will appreciate that the various embodiments can (i) include the same or generally similar features (e.g., components, configurations, etc.), (ii) operate the same or generally similarly, and/or (iii) that the various embodiments can be combined. Further, one skilled in the art will appreciate that the various embodiments discussed with reference to FIGS. **10-14** can (i) include the same or generally similar features (e.g., components, configurations, etc.) as those embodiments discussed with reference to FIGS. **2-9**, (ii) operate the same or generally similarly as those embodiments discussed with

reference to FIGS. **2-9**, and/or (iii) that the various embodiments can be combined with each other and/or the embodiments discussed with reference to FIGS. **2-9**. Moreover, one of ordinary skill in the art will appreciate that the number of components can vary in the following embodiments. For example, the systems of the present technology can have any number of delivery channels, return channels, sensors, heaters, chillers, heat exchangers, nozzles, etc.

[0090] FIG. **10** is a schematic illustration of a perception surface cleaning system **1010** for cleaning one or more perception sensors **1018** with heated fluid, and for recirculating the heated fluid, configured in accordance with an embodiment of the present technology. In the illustrated embodiment, a washer fluid pump **1004** is configured to pump washer fluid **1001** from a reservoir **1002** to a delivery system **1006** (e.g., a valve system, manifold, etc.) having a plurality of distribution valves **1008**. A parasitic heater **1012** is arranged in parallel to the delivery system **1006** and configured to heat the fluid **1001** by transferring heat generated by a vehicle engine **1014** (or other system) to the fluid **1001**. The valves **1008** and/or one or more additional valves of the delivery system **1006** (e.g., a 3-way bypass valve) can be selectively opened/closed to permit the fluid **1001** to flow (i) to the heater **1012** for heating and subsequently back into the delivery system **1006** and/or (ii) from the delivery system **1006** and along one or more parallel delivery channels **1028** to corresponding holding chambers **1016**. As described in detail above, the delivery system **1006** can selectively route all, none, or a portion of the fluid **1001** to the heater **1012** to heat the fluid **1001** to a desired temperature before directing the fluid **1001** to one or more of the holding chambers **1016**.

[0091] In the illustrated embodiment, each of the holding chambers **1016** is fluidly connected to a nozzle **1017** via a three-way pre-nozzle valve **1019**. The three-way pre-nozzle valve **1019** is configured to selectively fluidly connect the holding chamber **1016** to (i) the nozzle **1017** or (ii) a return channel **1026** configured to return the fluid **1001** to the reservoir **1002** and/or the delivery system **1006**. The return channels **1026** can be coupled to the delivery system **1006** (e.g., to return the fluid **1001** thereto) and/or to the reservoir **1002** (e.g., to return the fluid **1001** thereto). In some embodiments, the holding chamber **1016** is configured to hold a volume of fluid of between about one and five times the volume of the fluid **1001** generally delivered via the nozzles **1017** to the sensors **1018**. In one aspect of the present technology, the holding chambers **1016** allow the system **1010** to deliver the heated fluid **1001** when needed and for the volume to be quickly flushed and replaced with warmer fluid **1001** when recirculated. In some embodiments, the holding chambers **1016** can have a lower ratio of surface area to volume than the delivery channels **1028** through which the fluid **1001** generally flows, such that the fluid **1001** cools more slowly in the holding chambers **1016** than in the delivery channels **1028**. In some embodiments, the holding chambers **1016** can include heating elements and/or can be thermally insulated to reduce the rate of heat loss from the fluid **1001**.

[0092] In the illustrated embodiment, a controller **1024** is operably coupled to the pump **1004**, a temperature sensor **1025** configured to sense the temperature of the fluid **1001** in and/or proximate to the delivery system **1006**, the delivery system **1006**, the three-way pre-nozzle valves **1019**, and the sensors **1018**. Periodically, the controller **1024** can recirculate the fluid **1001** in one or more of the delivery channels **1028** to ensure that the fluid **1001** within the holding chambers **1016** is within a desired temperature range. More specifically, to recirculate the fluid **1001** within the delivery channels, the controller **1024** can (i) open the corresponding distribution valves **1008** to pump the fluid **1001** into the selected delivery channels **1028** to move the fluid **1001** from the holding chambers **1016** into the three-way pre-nozzle valves **1019**, and (ii) actuate the three-way pre-nozzle valves **1019** to route the fluid **1001** into the return channels **1026**. The controller **1024** can elect to recirculate the fluid **1001** in one or more the holding chambers **1016** based on signals received from the temperature sensor **1025**, an elapsed time, an ambient temperature, and/or other information. In some embodiments, the controller **1024** can also control the pump **1004** to pump the fluid **1001** at a rate selected for fluid recirculation and may choose to heat the fluid **1001** to different temperatures by selectively routing a portion of the flow to the heater **1012** (e.g., based on signals received from the temperature sensor **1025**). These parameters may be varied for each of sensors **1018** and the corresponding delivery channels **1028**. When the controller **1024** determines that one or more of the perception sensors **1018** are occluded, the controller **1024** can selectively engage the pump **1004** and the associated one or more of the distribution valves **1008** to route the fluid **1001** along the selected delivery channels **1028** to the nozzles **1017** corresponding to the occluded sensors **1018** to clean the corresponding occluded sensors **1018**.

[0093] In the illustrated embodiment, the holding chambers **1016** are positioned proximate to the corresponding nozzles **1017** to minimize a channel distance/volume therebetween. In one aspect of the present technology, the volume of the fluid **1001** held between the holding chambers **1016** and the nozzles **1017** is not recirculated (e.g., because it is positioned beyond the three-way pre-nozzle valves **1019**) and therefore must be ejected from the nozzles **1017** before heated fluid is delivered. Thus, positioning the holding chambers **1016** proximate to the corresponding nozzles **1017** can minimize the inefficient ejection of cooled fluid **1001**. Additionally, by locating the holding chambers **1016** and the three-way pre-nozzle valves **1019** close to the nozzles **1017**, the time required to initiate and to complete a dose of washer fluid **1001** is reduced.

[0094] In some embodiments, to simplify plumbing of the flow-containing channels of the sensor cleaning system **1010**, each channel is constructed of dual lumen tubing **1029** (shown in cross-section in FIG. **10**), wherein one lumen contains the fluid **1001** traveling from the delivery system **1006** to the three-way pre-nozzle valve **1019**, and the other lumen carries the fluid **1001** traveling from the three-way pre-nozzle valve **1019** to the delivery system **1006** and/or the reservoir **1002**. That is, the delivery channels **1028** and the return channels **1026** can be combined in the dual lumen tubing **1029**. In some embodiments, dual lumen tubing can be used to transport the fluid **1001** between the delivery system **1006** and the heater **1012**.

[0095] FIG. **11** is a schematic illustration of a perception surface cleaning system **1110** for cleaning one or more perception sensors **1118** with heated fluid, and for recirculating the heated fluid, configured in accordance with another embodiment of the present technology. In the illustrated embodiment, a washer fluid pump **1104** is configured to pump washer fluid **1101** from a reservoir **1102** to a

delivery system **1106** (e.g., a manifold, valve system, etc.) having a plurality of delivery valves **1108** and a plurality of return valves **1120**. In some embodiments, one or more of the delivery valves **1108**, the return valves **1120**, and/or other valves of the delivery system **1106** can be individually controlled solenoid valves or can be combined into a rotary valve system. A parasitic heater **1112** is arranged in parallel to the delivery system **1106** and configured to heat the fluid **1101** by transferring heat generated by a vehicle engine **1114** (or other system) to the fluid **1101**. The delivery valves **1108** and/or one or more other valves (e.g., a 3-way bypass valve) can be selectively opened/closed to permit the fluid **1101** to flow (i) to the heater **1112** for heating and subsequently back into the delivery system **1106** and/or (ii) from the delivery system **1106** and along one or more parallel delivery channels **1128** to corresponding holding chambers **1116**. As described in detail above, the delivery system **1106** can selectively route all, none, or a portion of the fluid **1101** to the heater **1112** to heat the fluid **1101** to a desired temperature before directing the fluid **1101** to one or more of the holding chambers **1116**.

[0096] In the illustrated embodiment, each of the holding chambers **1116** is fluidly connected to a nozzle **1117** via a pre-nozzle check valve **1121**. The nozzles **1117** are configured to distribute or spray the fluid **1101** onto corresponding ones of the sensors **1118** to clean the sensors **1118** (e.g., clear the sensors **1118** of occlusions). The pre-nozzle check valves **1121** are configured to selectively fluidly connect the holding chambers **1116** to corresponding (i) ones of the nozzles **1117** or (ii) return channels **1126** configured to return the fluid **1101** to the reservoir **1102** and/or the delivery system **1106**. The return channels **1126** can be coupled to the delivery system **1106** (e.g., to return the fluid **1101** thereto) and/or to the reservoir **1102** (e.g., to return the fluid **1101** thereto). For example, in the illustrated embodiment the return valves **1120** are fluidly coupled to corresponding ones of the return channels **1126**.

[0097] A controller **1124** can be operably coupled to the pump **1104**, a temperature sensor **1125** configured to sense the temperature of the fluid **1101** in and/or proximate to the delivery system **1106**, the delivery system **1106**, and the sensors **1118**. Periodically, the controller **1124** can recirculate the fluid **1101** in one or more of the delivery channels **1128** to ensure that the fluid **1101** within the holding chambers **1116** is within a desired temperature range. More specifically, to recirculate the fluid **1101** within a selected one of the holding chambers **1116**, the controller **1124** can open both the delivery valve **1108** and the return valve **1120** of the delivery system **1106** that correspond to the selected one of the holding chambers **1116**. This permits the fluid **1101** to return along the corresponding return channel **1126**, as the pressure at the pre-nozzle check valve **1121** remains below the cracking pressure of the pre-nozzle check valve **1121**. When the return valve **1120** is open, the pre-nozzle check valve **1121** is closed such that the fluid **1101** does not exit the nozzle **1117**. When the controller **1124** determines that one or more of the perception sensors **1118** are occluded, the controller **1124** can selectively engage the pump **1104** and the associated one or more of the delivery valves **1108** to route the fluid **1101** along the selected delivery channels **1128** to the nozzles **1117** corresponding to the occluded sensors **1118** to clean the corresponding occluded sensors **1118**. Specifically, with the return valves **1120** closed, the pressure at the pre-nozzle check valves **1121** exceeds the cracking pressures of the pre-nozzle check valves **1121**—allowing the fluid **1101** to pass therethrough to the nozzles **1117**. As described in detail above, the delivery channels **1128**, the return channels **1126**, and/or other components of the system **1110** can comprise a dual lumen tubing **1129** (shown in cross-section in FIG. **11**).

[0098] FIG. **12** is a schematic illustration of a perception surface cleaning system **1210** for cleaning one or more sensors **1218** with heated fluid, and for recirculating the heated fluid, configured in accordance with another embodiment of the present technology. In the illustrated embodiment, a washer fluid pump **1204** is configured to pump washer fluid **1201** from a reservoir **1202** to a delivery system **1206** having a plurality of delivery valves **1208** and a plurality of return valves **1220**. A parasitic heater **1212** and an electric heater **1213** are arranged (i) in series with each other and (ii) in parallel (e.g., to form a hybrid parasitic-electric heater) with the delivery system **1206**. The parasitic heater **1212** is configured to heat the fluid **1201** by transferring heat generated by a vehicle engine **1214** (or other system) to the fluid **1201**, while the electric heater **1213** is configured to receive the fluid **1201** (heated or unheated) from the parasitic heater **1212** and heat the fluid **1201** via, for example, a resistive heating element. The delivery valves **1208** and/or one or more other valves (e.g., a 3-way bypass valve) can be selectively opened/closed to permit the fluid **1201** to flow to (i) the parasitic heater **1212** and electric heater **1213** for heating and subsequently back into the delivery system **1206** and/or (ii) from the delivery system **1206** and along one or more parallel delivery channels **1228** to corresponding holding chambers **1216**.

[0099] In the illustrated embodiment, each of the holding chambers **1216** is fluidly connected to a nozzle **1217** via a pre-nozzle check valve **1221**. The nozzles **1217** are configured to distribute or spray the fluid **1201** onto corresponding ones of the sensors **1218** to clean the sensors **1218** (e.g., to clear the sensors **1218** of occlusions). The pre-nozzle check valves **1221** are configured to selectively fluidly connect the holding chambers **1216** to corresponding (i) ones of the nozzles **1217** or (ii) return channels **1226** configured to return the fluid **1201** to the delivery system **1206** via the return valves **1220**.

[0100] A controller **1224** can be operably coupled to the pump **1204**, a first temperature sensor **1225** configured to sense the temperature of the fluid **1201** in and/or proximate to the delivery system **1206**, the delivery system **1206**, and the sensors **1218**. Periodically, the controller **1224** can recirculate the fluid **1201** in one or more of the delivery channels **1228** to ensure, that the fluid **1201** within the holding chambers **1216** is within a desired temperature range. More specifically, as described in detail above, the controller **1224** can control the delivery valves **1208** and the return valves **1220** of the delivery system **1206** to control recirculation and disbursement of the fluid **1201**. For example, when the pump **1204** moves the fluid **1201** through the delivery valves **1208** and along the delivery channels **1228**, the pre-nozzle check valves **1221** are (i) open to permit the fluid **1201** to be forced through the nozzles **1217** when the return valves **1220** are closed and (ii) closed to cause the fluid **1201** to be forced through the return channels **1226** when the return valves **1220** are open. The delivery channels **1228**, the return channels **1226**, and/or other components of the system **1210** can comprise a dual lumen tubing **1229** (shown in cross-section in FIG. **12**).

[0101] In some embodiments, the controller **1224** is also operably coupled to a second temperature sensor **1231** configured to sense/detect a temperature of the fluid **1201** at and/or proximate to the electric heater **1213**. When fluid circulating between the engine **1214** and the parasitic heater **1212** is not hot (e.g., when the engine **1214** is not hot after a vehicle incorporating the engine **1214** first starts up), the parasitic heater **1212** may not sufficiently heat the washer fluid **1201**. In this case, the controller **1224** can receive a temperature signal from the second temperature sensor **1231** indicating that the fluid **1201** is below a threshold temperature, and can selectively activate the electric heater **1213** to provide supplemental heating to the washer fluid **1201** before it returns to the delivery system **1206**. In some embodiments, the controller **1224** is configured to selectively disengage the electric heater **1213** when the hot fluid **1201** recirculating between the engine **1214** and the parasitic heater **1212** is sufficiently warm (e.g., after a predetermined time period, when the vehicle is put into drive, and/or under some other condition).

[0102] FIG. **13** is a schematic illustration of a perception surface cleaning system **1310** for cleaning one or more perception sensors **1318** with heated fluid, and for recirculating the heated fluid, configured in accordance with another embodiment of the present technology. In the illustrated embodiment, a washer fluid pump **1304** is configured to pump washer fluid **1301** from a reservoir **1302** to a delivery system **1306** having a plurality of delivery valves **1308** and a plurality of return valves **1320**. A parasitic heater **1312** and an electric heater **1313** are individually connected to the delivery system **1306**. The parasitic heater **1312** is configured to heat the fluid **1301** by transferring heat generated by a vehicle engine **1314** (or other system) to the fluid **1301**, while the electric heater **1313** is configured to heat the fluid **1301** via, for example, a resistive heating element. More specifically, one or more of the delivery valves **1308** and/or one or more other valves (e.g., a 3-way bypass valve) can be opened to route all, none, or a portion of the fluid **1301** to the parasitic heater **1312** and/or to the electric heater **1313**. For example, in some embodiments all the fluid **1301** can be routed to the parasitic heater **1312** for heating, and can be routed to the electric heater **1313** only if the parasitic heater **1312** is unable to heat the fluid **1301** to a predetermined temperature. In other embodiments, a first portion of the fluid **1301** can be routed to the parasitic heater **1312** and a second portion of the fluid **1301** can be routed to the electric heater **1313**. The first and second portions can have the same or different volumes. That is, the delivery system **1306** can selectively route the fluid **1301** to the electric heater **1313**, the parasitic heater **1312**, to neither, or to both.

[0103] Regardless of the one of or combination of the parasitic heater **1312** and the electric heater **1313** used to heat the fluid **1301**, the delivery valves **1308** can be selectively opened/closed to permit the heated fluid **1301** to flow to from the delivery system **1306** and along one or more parallel delivery channels **1328** to corresponding holding chambers **1316**. In the illustrated embodiment, each of the holding chambers **1316** is fluidly connected to a nozzle **1317** via a pre-nozzle check valve **1321**. The nozzles **1317** are configured to distribute or spray the fluid **1301** onto corresponding ones of the sensors **1318** to clean the sensors **1318** (e.g., to clear the sensors **1318** of occlusions). The pre-nozzle check valves **1321** are configured to selectively fluidly connect the holding chambers **1316** to corresponding (i) ones of the nozzles **1317** or (ii) return channels **1326** configured to return the fluid **1301** to the delivery system **1306** via the return valves **1320**.

[0104] A controller **1324** can be operably coupled to the pump **1304**, a first temperature sensor **1325** configured to sense the temperature of the fluid **1301** in and/or proximate to the delivery system **1306**, the delivery system **1306**, and the sensors **1318**. Periodically, the controller **1324** can recirculate the fluid **1301** in one or more of the delivery channels **1328** to ensure, that the fluid **1301** within the holding chambers **1316** is within a desired temperature range. More specifically, as described in detail above, the controller **1324** can control the delivery valves **1308** and the return valves **1320** of the delivery system **1306** to control recirculation and disbursement of the fluid **1301**. For example, when the pump **1304** moves the fluid **1301** through the delivery valves **1308** and along the delivery channels **1328**, the pre-nozzle check valves **1321** are (i) open to permit the fluid **1301** to be forced through the nozzles **1317** when the return valves **1320** are closed and (ii) closed to cause the fluid **1301** to be forced through the return channels **1326** when the return valves **1320** are open. The delivery channels **1328**, return channels **1326**, and/or other components of the system **1310** can comprise a dual lumen tubing **1329** (shown in cross-section in FIG. **13**).

[0105] In some embodiments, the controller **1324** is also operably coupled to a second temperature sensor **1331** configured to sense/detect a temperature of the fluid **1301** at and/or proximate to the electric heater **1313**. When fluid circulating between the engine **1314** and the parasitic heater **1312** is not hot (e.g., when the engine **1314** is not hot after a vehicle incorporating the engine **1314** first starts up), the parasitic heater **1312** may not sufficiently heat the washer fluid **1301**. In this case, the controller **1324** can receive a temperature signal from the second temperature sensor **1331** indicating that the fluid **1301** is below a threshold temperature, and can operate the delivery system **1306** to selectively direct all or a portion of the fluid **1301** to the electric heater **1313** to sufficiently heat the fluid **1301**. In some embodiments, the controller **1324** is configured to selectively disengage the electric heater **1313** when the hot fluid recirculating between the engine **1314** and the parasitic heater **1312** is sufficiently warm (e.g., after a predetermined time period, when the vehicle is put into drive, and/or under some other condition).

[0106] FIG. **14** is a schematic illustration of a perception surface cleaning system **1410** for cleaning one or more perception sensors **1418** with heated fluid, and for recirculating the heated fluid, configured in accordance with another embodiment of the present technology. In the illustrated embodiment, a washer fluid pump **1404** is configured to pump washer fluid **1401** from a reservoir **1402** to a delivery system **1406** having a plurality of delivery valves **1408** and a single return valve **1420**. A parasitic heater **1412** is arranged in parallel with the delivery system **1406** and configured to heat the fluid **1401** by transferring heat generated by a vehicle engine **1414** (or other system) to the fluid **1401**. The delivery valves **1408** and/or one or more other valves (e.g., a 3-way bypass valve) can be selectively opened/closed to permit the fluid **1401** to flow to (i) the heater **1412** for heating and subsequently back into the delivery system **1406** and/or (ii) from the delivery system **1406** and along one or more parallel delivery channels **1428** to corresponding holding chambers **1416**. As described in

detail above, the delivery system **1406** can selectively route all, none, or a portion of the fluid **1401** to the heater **1412** to heat the fluid **1401** to a desired temperature before directing the fluid **1401** to one or more of the holding chambers **1416**.

[0107] In the illustrated embodiment, each of the holding chambers **1416** is fluidly connected to a nozzle **1417** via a pre-nozzle check valve **1421**. The nozzles **1417** are configured to distribute or spray the fluid **1401** onto corresponding ones of the perception sensors **1418** to clean the sensors **1418** (e.g., to clear the sensors **1418** of occlusions). The pre-nozzle check valves **1421** are configured to selectively fluidly connect the holding chambers **1416** to corresponding (i) ones of the nozzles **1417** or (ii) return channels **1426** configured to return the fluid **1401** to the reservoir **1402** and/or the delivery system **1406**. In the illustrated embodiment, each of the return channels **1426** includes a return check valve **1432**, and the return channels **1426** are merged together via a return T-connector **1434** into a single channel received by the single return valve **1420** of the delivery system **1406**. In some embodiments, the delivery channels **1428**, the return channels **1426**, and/or other components of the system **1410** can comprise a dual lumen tubing **1429** (shown in cross-section in FIG. **14**).

[0108] A controller **1424** can be operably coupled to the pump **1404**, a temperature sensor **1425** configured to sense the temperature of the fluid **1401** in and/or proximate to the delivery system **1406**, the delivery system **1406**, and the sensors **1418**. Periodically, the controller **1424** can recirculate the fluid **1401** in one or more of the delivery channels **1428** to ensure, that the fluid **1401** within the holding chambers **1416** is within a desired temperature range. More specifically, to recirculate the fluid **1401** within one or more of the holding chambers **1416** and the delivery channels **1428**, the controller **1424** can open (i) selected ones of the delivery valves **1408** and (ii) the return valve **1420**. In this case, when the pump **1404** moves the fluid **1401** through the delivery valves **1408** and along the delivery channels **1428**, the fluid **1401** in the holding chambers **1416** is forced along the return channels **1426**, through the return check valves **1432**, through the return T-connector **1434**, and through the return valve **1420** of the delivery system **1406**. Because the return valve **1420** is open during recirculation, the pressure in the holding chambers **1416** does not exceed the threshold pressure required to open the pre-nozzle check valves **1421**. In one aspect of the present technology, the dimensions (e.g., length, diameter, etc.) of the return check valves **1432**, the return T-connector **1434**, the return valve **1420**, and the return channels **1426** (e.g., tubing) is selected to limit the pressure drop in this flow path. This can ensure that the pressure at the pre-nozzle check valves **1421** does not exceed the cracking pressure of these valves during recirculation—which would permit the fluid **1401** to pass therethrough. The return check valves **1432** are configured to inhibit or prevent back flow of the fluid **1401** from, for example, the delivery system **1406** into the return channels **1426** during recirculation.

[0109] When the controller **1424** determines that one or more of the perception sensors **1418** are occluded, the controller **1424** can close the return valve **1420** and selectively engage the pump **1404** and the associated one or more of the delivery valves **1408** to route the fluid **1401** along the selected delivery channels **1428** to the nozzles **1417** corresponding to the occluded sensors **1418** to clean the corresponding occluded sensors **1418**. Specifically, when the pump **1404** is activated with the return valve **1420** closed, the pressure in the delivery channels **1428** can increase until pressure at the pre-nozzle check valves **1421** exceeds the cracking pressures of the pre-nozzle check valves **1421**—allowing the fluid **1401** to pass therethrough to the nozzles **1417**.

IV. Selected Embodiments of Systems for Cleaning and Thermally Managing Vehicle Components

[0110] As set forth above, many vehicle components require or can benefit from surface cleaning with a fluid (e.g., heated washer fluid). Often, the same vehicle components and/or other proximate components can also benefit from temperature control. For example, in some instances one component requires surface cleaning while a different nearby component requires cooling. When these components are near to each other, it can be advantageous to provide a combined system for cleaning and thermal management. Accordingly, referring again to FIG. **1**, in some embodiments of the present technology a cleaning system (e.g., the cleaning system **110**) can be configured to deliver fluid, such as washer fluid, to one or more vehicle components (e.g., the sensors **108** and/or the perception surfaces **109**) to both thermally manage (e.g., heat and/or cool) the vehicle components and to clean the vehicle components. In one aspect of the present technology, the present technology can advantageously use the same or generally similar components to route and distribute fluid for cleaning and temperature control. For example, the cleaning system **110** can be configured to route warmed fluid or cooled fluid to components of the vehicle **100**, utilizing the same or similar washer fluid reservoir, washer fluid, fluid pump, delivery system, distribution tubing, controller, temperature sensors, etc., as described in detail above with reference to FIGS. **2-14**.

[0111] Washer fluid commonly used in vehicles is frequently a mix of water and up to 50% alcohol by volume (e.g., methanol (CH_3OH) or ethanol (C_2H_6O), depending on local regulations). Such washer fluid is commonly used across a range of temperatures from −30-65° C., and has well understood thermal properties including a heat capacity between 3.0-4.1 joules per milliliter per degree Celsius, depending on the temperature and composition of the washer fluid. Because of its broad operating temperature range and reasonably high heat capacity, such washer fluid may serve as a heat transfer medium in addition to a surface cleaning solution.

[0112] In some embodiments, the cleaning system **110** (e.g., a sensor cleaning and temperature control system) is configured to pump washer fluid from a fluid reservoir and deliver the fluid to a distribution system comprising valves, pathways directing fluid flow, sensors, and connectors. Fluid within the distribution system may be selectively routed by the actuation of valves to be heated, to be cooled, or to do neither (e.g., leaving the fluid at ambient temperature or a temperature of the fluid in the reservoir). The distribution system can selectively route this fluid to one or more selected channels (e.g., tubes, conduits, etc.) that direct the fluid to a selected destination (e.g., to one of the components of the vehicle **100**) for cleaning and/or temperature control. In some embodiments, the channels are selected by opening or closing one or more valves. The valves may be located distant from each other or near each other. For example, the valves can be electrically-actuated solenoid valves mounted

to or built into a shared manifold. In other embodiments, the control of flow in each channel may be directed through adjusting the position of one or more multi-position valves such as rotary valves or may be directed through the combination of different types of valves such as rotary valves and solenoid valves.

[0113] In some embodiments, heated washer fluid may be highly desirable for cleaning perception components or other vehicle components during particular times of the year, such as when ambient temperatures are low, and snow and ice can occlude perception surfaces. In contrast, cooled washer fluid may be highly desirable for cooling the same vehicle components during times of the year when ambient temperatures are higher. Further, some vehicle components may require cooling at the same times of the year that their surfaces require cleaning, necessitating the delivery of both hot and cold fluid.

[0114] In some embodiments, the cleaning system **110** is configured to deliver fluid for temperature control and for cleaning at different locations on or features of a vehicle component. For example, cleaning fluid may be sprayed on the lens of a camera, while temperature control fluid may pass through a heat exchanger mounted to the rear or the side of the camera. Similarly, cleaning fluid may be sprayed on the surface of a headlamp, while temperature control fluid may pass through a heat exchanger mounted to the rear or one of the sides of the headlamp.

[0115] In some embodiments, the cleaning system **110** includes a recirculating function including, for example, any of the components, features, and/or configurations described in detail above with reference to FIGS. **10-14**. For example, in some embodiments the cleaning system **110** can (i) route fluid to a fluid heater and then through a channel to a position proximate a desired delivery point, and (ii) selectively route the fluid from the position proximate the delivery point, where it may have cooled over time, to return to the washer fluid reservoir. By this arrangement/method, warm fluid is maintained proximate to a desired point of delivery. Similarly, when component cooling is desired, the fluid may be routed to a chiller and then through a channel to a heat exchanger on the component to be cooled, and then returned to the fluid reservoir. The channel which carries the warmed fluid may be the same as the channel which carries the cooled fluid, or warmed and cooled fluids may be carried in separate channels.

[0116] In one aspect of the present technology, the cleaning system **110** can thermally manage vehicle components intended to be fully hermetically sealed, but that may not be completely sealed (e.g., 100%) during operation. More particularly, complete hermetic sealing is desirable to protect internal electrical/electronic componentry of perception sensors such as cameras (which are expected to be the most common type of perception sensor in vehicles) and headlamp assemblies. However, if the sealing is not perfect, contaminants (e.g., dust) and moisture can degrade the performance of these components. For example, condensation on the internal and/or external surfaces of a camera can cause temporary and permanent malfunction of the camera. Likewise, cold camera lenses or headlamp lenses can condense moisture in the form of water droplets, which eventually dry out and leave a film on the internal side of the lens. With headlamps, such contaminants can cause oncoming glare to approaching vehicles, while also deteriorating visibility for the driver of the offending vehicle. With cameras, any condensed moisture or traces of dust or film on the inside of the camera lens can make it difficult to generate a clear image.

[0117] More specifically, electronic cameras (e.g., as used in vehicle camera perception systems) can be particularly susceptible to permanent internal electrical malfunction when moisture condenses on electric/electronic circuitry and causes electrolysis corrosion that can interfere with and damage this circuitry. Moreover, such corrosion can also generate oxidation gasses that condense on the inside surface of the camera lens—further degrading the camera. Such electrolysis/corrosion can happen at an increased rate in higher population and industrial areas which commonly precipitate atmospheric dust that, when combined with condensed water, can form an electrolyte and result in accelerated electrolysis corrosion.

[0118] Similarly, whenever a cold vehicle enters a warm ambient environment (which will often contain higher levels of air moisture than cold outside air)—as might happen when a car operating on a cold winter day enters a warm garage, parking structure, or service area—the higher moisture ambient air will tend to condense as water droplets on the cold surfaces of the vehicle, including those of the perception cameras. In a reverse manner, when a car that has been parked inside a warm garage drives outside into cold air, the warm higher moisture air contained within the car—and thus within vehicle perception cameras or sensors—will tend to condense into water and interrupt camera/sensor function. Even though electronic cameras generate some heat, the rate of heat generation may not be great enough to prevent condensation or to quickly dry out moisture. Accordingly, in one aspect of the present technology, the cleaning system **110** can provide thermal heating to such cameras and/or other vehicle components to rapidly warm the cameras to reduce the above-noted deleterious effects of condensation.

[0119] FIGS. **15-17** are schematic illustrations more specifically illustrating various embodiments of closed-loop systems for cleaning and temperature control of vehicle components configured in accordance with embodiments of the present technology. The detailed description of each embodiment focuses mainly on those components that are new/different as compared to other embodiments. However, one skilled in the art will appreciate that the various embodiments can (i) include the same or generally similar features (e.g., components, configurations, etc.), (ii) operate the same or generally similarly, and/or (iii) that the various embodiments can be combined. Further, one skilled in the art will appreciate that the various embodiments discussed with reference to FIGS. **15-17** can (i) include the same or generally similar features (e.g., components, configurations, etc.) as those embodiments discussed with reference to FIGS. **2-14**, (ii) operate the same or generally similarly as those embodiments discussed with reference to FIGS. **2-14**, and/or (iii) that the various embodiments can be combined with each other and/or the embodiments discussed with reference to FIGS. **2-14**. Moreover, one of ordinary skill in the art will appreciate that the number of components can vary in the following embodiments. For example, the systems of the present technology can have any number of delivery channels, return channels, sensors, heaters, chillers, heat exchangers, nozzles, etc.

[0120] FIG. **15** is a schematic illustration of a perception surface cleaning and temperature control system **1510** con-

figured in accordance with an embodiment of the present technology. In the illustrated embodiment, a washer fluid pump **1504** is configured to pump washer fluid **1501** from a reservoir **1502** to a delivery system **1506** (e.g., a manifold, valve system, etc.) having a plurality of delivery valves **1508** and a plurality of return valves **1520**. A fluid heater **1512** and a fluid cooler or chiller **1540** are individually connected to the delivery system **1506**. The fluid heater **1512** can comprise a parasitic heater configured to heat the fluid **1501** by transferring heat generated by a vehicle engine (or other system) to the fluid **1501**, an electric heater configured to heat the fluid **1501** via a resistive heating element, another type of heater, and/or a combination of heaters (e.g., including an electric heater and a parasitic heater). In some embodiments, the fluid cooler **1540** is configured to cool the fluid **1501** via exchange with a cold fluid, such as air or liquid cooled by an air conditioning system of a vehicle. One or more of the delivery valves **1508** and/or one or more other valves (e.g., a 3-way bypass valve) can be opened to route all, none, or a portion of the fluid **1501** to the heater **1512** and/or to the fluid cooler **1540**. For example, a first portion of the fluid **1501** can be routed to the fluid heater **1512** and a second portion of the fluid **1501** can be routed to the fluid cooler **1540**. The first and second portions can have the same or different volumes. In other embodiments, all of the fluid **1501** can be routed to the heater **1512**, such as when only heated fluid is required/desirable. Put differently, the fluid **1501** can be selectively directed to the fluid heater **1512**, the fluid cooler **1540**, to neither, or to both.

[0121] Regardless of the one or more combinations of the fluid heater **1512** and the fluid cooler **1540** used to heat/cool the fluid **1501**, the delivery valves **1508** can be selectively opened/closed to permit the heated/cooled fluid **1501** to flow from the delivery system **1506** and along one or more parallel delivery channels **1528** to corresponding pre-sensor valves **1523**. The pre-sensor valves **1523** are configured to selectively fluidly connect each of the delivery channels **1528** to (i) a nozzle **1517** configured to spray the fluid **1501** onto a corresponding perception sensor **1518** or (ii) a heat exchanger **1542** configured to heat and/or cool the sensor **1518** by generating a temperature differential between the fluid **1501** therein and the sensor **1518**. In the illustrated embodiment, the nozzle **1517** and the heat exchanger **1542** clean and cool/heat, respectively, the same component—the sensor **1518**. In other embodiments, the nozzle **1517** and the heat exchanger **1542** can operate with respect to different vehicle components. For example, the nozzle **1517** could be configured to clean the sensor **1518** (e.g., a camera) while the heat exchanger **1542** could be configured to cool a different nearby component (e.g., another camera, a sensor, etc.). As further shown in FIG. **15**, return channels **1526** fluidly connect the heat exchangers **1542** to the return valves **1520** of the delivery system **1506** and are configured to return the fluid **1501** to the delivery system **1506** and/or the reservoir **1502**.

[0122] A controller **1524** can be operably coupled to the pump **1504**, a temperature sensor **1525** configured to sense the temperature of the fluid **1501** in and/or proximate to the delivery system **1506**, the delivery system **1506**, the sensors **1518**, and/or the pre-sensor valves **1523**. In operation, the controller **1524** is configured to receive a signal (e.g., a signal **1544**) from one or more of the sensors **1518** and determine whether the sensors **1518** require cleaning and/or thermal management. Based on the determination, the controller **1524** can operate the pump **1504** (e.g., by sending a control signal **1546**) and the delivery system **1506** to selectively heat and/or cool the fluid **1501** before opening one or more of the delivery valves **1508** to route the heated/cooled fluid **1501** along the delivery channels **1528** corresponding to the sensors **1518** requiring cleaning and/or thermal management. The controller **1524** can then operate (e.g., actuate) the pre-sensor valves **1523** to selectively direct the fluid **1501** to the nozzles **1517** and/or the heat exchangers **1542**. Any of the fluid **1501** directed to the heat exchangers **1542** is subsequently returned to the delivery system **1506** and/or the reservoir **1502** via the return valves **1520**.

[0123] In some embodiments, one or more of the delivery valves **1508**, the return valves **1520**, and/or other valves of the delivery system **1506** can be individually controlled solenoid valves or can be combined into a rotary valve system. In some embodiments, the delivery channels **1528**, the return channels **1526**, and/or other components of the system **1510** can comprise a dual lumen tubing **1529** (shown in cross-section in FIG. **15**).

[0124] FIG. **16** is a schematic illustration of a perception surface cleaning and temperature control system **1610** configured in accordance with another embodiment of the present technology. In the illustrated embodiment, a washer fluid pump **1604** is configured to pump washer fluid **1601** from a reservoir **1602** to a delivery system **1606** having a plurality of first delivery valves **1608***a*, a plurality of second delivery valves **1608***b*, a plurality of first return valves **1620***a*, and a plurality of second return valves **1620***b*. A fluid heater **1612** and a fluid cooler or chiller **1640** are individually connected to the delivery system **1606**. One or more of the first delivery valves **1608***a*, the second delivery valves **1608***b*, and/or other valves (e.g., a 3-way bypass valve) can be opened to route all, none, or a portion of the fluid **1601** to the fluid heater **1612** and/or to the fluid cooler **1640** to selectively heat/cool the fluid **1601**.

[0125] In the illustrated embodiment, the first delivery valves **1608***a* can be selectively opened/closed to permit the heated/cooled fluid **1601** to flow from the delivery system **1606** and along one or more parallel first delivery channels **1628***a* to corresponding heat exchangers **1642**. The heat exchangers **1642** can be configured to heat and/or cool nearby perception sensors **1618**. First return channels **1626***a* fluidly connect the heat exchangers **1642** to the first return valves **1620***a* of the delivery system **1606** and are configured to return the fluid **1601** to the delivery system **1606** and/or the reservoir **1602**. By this arrangement, the fluid **1601** routed to the heat exchangers **1642** is recirculated within the system **1610**. The second delivery valves **1608***b* can be selectively opened/closed to permit the heated/cooled fluid **1601** to flow from the delivery system **1606** and along one or more parallel second delivery channels **1628***b* to pre-nozzle delivery valves **1623**. Each of the pre-nozzle delivery valves **1623** is configured to selectively route the fluid **1601** to (i) a nozzle **1617** configured to spray the fluid **1601** onto a corresponding one of the perception sensors **1618** or (ii) a second return channel **1626***b* configured to return the fluid **1601** to the delivery system **1606** and/or the reservoir **1602** via the second return valves **1620***b*. The pre-nozzle delivery valves **1623** can be three-way valves (e.g., three-way solenoid valves), check valves, and/or other types of valves. As described in detail above with reference to FIGS. **10-14**, the pre-nozzle delivery valves **1623** allow for the fluid **1601** in the second delivery channels **1628***b* to be recirculated back

into the delivery system **1606** and/or the reservoir **1602** to be heated again. Moreover, in some embodiments, the system **1610** can include fluid holding chambers (e.g., insulated chambers configured to hold a volume of the fluid **1601** that is between about 1-5 times greater than the expected volume of the fluid **1601** to be delivered by the nozzles **1617**) fluidly connected to the second delivery channels **1628***b*. In some such embodiments, the fluid holding chambers can be positioned near the nozzles **1617** and before the pre-nozzle delivery valves **1623**.

[0126] A controller **1624** can be operably coupled to the pump **1604**, a temperature sensor **1625** configured to sense the temperature of the fluid **1601** in and/or proximate to the delivery system **1606**, the delivery system **1606**, the sensors **1618**, and/or the pre-nozzle delivery valves **1623**. In operation, the controller **1624** is configured to receive a signal (e.g., a signal **1644**) from one or more of the sensors **1618** and determine whether the sensors **1618** require cleaning and/or thermal management. Based on the determination, the controller **1624** can operate the pump **1604** (e.g., by sending a control signal **1646**) and the delivery system **1606** to selectively heat and/or cool the fluid **1601** before opening one or more of the first delivery valves **1608***a* and/or the second delivery valves **1608***b* to route the heated/cooled fluid **1601** along the first delivery channels **1628***a* and/or the second delivery channels **1628***b* corresponding to the sensors **1618** requiring cleaning and/or thermal management. More specifically, for example, if one the sensors **1618** requires thermal management, the controller **1624** can actuate (e.g., open) the corresponding one of the first delivery valves **1608***a* to route the fluid **1601** along the first delivery channel **1628***a* to the heat exchanger **1642**. Similarly, if one the sensors **1618** requires cleaning, the controller **1624** can actuate the corresponding one of the second delivery valves **1608***b* to route the fluid **1601** along the second delivery channel **1628***b* to the pre-nozzle delivery valve **1623**. If the pre-nozzle delivery valve **1623** is a controller-actuatable valve (e.g., a three-way solenoid valve), the controller **1624** can control the pre-nozzle delivery valve **1623** to route the fluid to the nozzle **1617** for cleaning the sensor **1618**. If the pre-nozzle delivery valve **1623** is a check valve or other passive valve, the controller **1624** can control the delivery system **1606** to close the corresponding one of the second return valves **1620***b* such that that the pressure in the second delivery channel **1628***b* exceeds the cracking pressure of the pre-nozzle delivery valve **1623**, allowing the fluid **1601** to exit through the nozzle **1617**.

[0127] In some embodiments, the controller **1624** is configured to determine that recirculation of the fluid **1601** second delivery channels **1628***b* is needed or desirable based on a temperature signal received from the temperature sensor **1625** or another temperature sensor (e.g., positioned along one of the second delivery channels **1628***b* or at a holding chamber coupled thereto). In other embodiments, the controller **1624** can periodically recirculate the second delivery channels **1628***b* or can base the determination that recirculation is needed on another input or criteria. If the pre-nozzle delivery valves **1623** are controller-actuatable valves (e.g., three-way solenoid valves), the controller **1624** can recirculate the fluid **1601** in the second delivery channels **1628***b* by controlling the pre-nozzle delivery valves **1623** to route the fluid **1601** to the second return channels **1626***b*. If the pre-nozzle delivery valves **1623** are check valves or other passive valves, the controller **1624** can recirculate the fluid **1601** in the second delivery channels **1628***b* by controlling the delivery system **1606** to open the second return valves **1620***b* such that that the pressure in the second delivery channels **1628***b* does not exceed the cracking pressure of the pre-nozzle delivery valves **1623**, preventing the fluid **1601** from exiting through the nozzles **1617** and allowing the fluid **1601** to flow into the second return channels **1626***b*.

[0128] In some embodiments, the first delivery channels **1628***a*, the second delivery channels **1628***b*, the first return channels **1626***a*, the second return channels **1626***b*, and/or other components of the system **1610** can comprise a four-lumen tubing **1649** (shown in cross-section in FIG. **16**). In some embodiments, the four-lumen tubing **1649** can be co-extruded. Such an arrangement can reduce the number of tubes/conduits required to service each of the sensors **1618**.

[0129] FIG. **17** is a schematic illustration of a perception surface cleaning and temperature control system **1710** configured in accordance with another embodiment of the present technology. In the illustrated embodiment, a washer fluid pump **1704** is configured to pump washer fluid **1701** from a reservoir **1702** to a delivery system **1706** (e.g., a manifold) having a plurality of first delivery valves **1708***a*, a plurality of second delivery valves **1708***b*, and a plurality of return valves **1720**. A fluid heater **1712** and a fluid cooler or chiller **1740** are individually connected to the delivery system **1706**. One or more of the first delivery valves **1708***a*, the second delivery valves **1708***b*, and/or other valves (e.g., a 3-way bypass valve) can be opened to route all, none, or a portion of the fluid **1701** to the fluid heater **1712** and/or to the fluid cooler **1740** to heat/cool the fluid **1701**. As described in detail above, the first delivery valves **1708***a* can be selectively opened/closed to permit the heated/cooled fluid **1701** to flow from the delivery system **1706** and along one or more parallel first delivery channels **1728***a* to corresponding heat exchangers **1742** configured to heat and/or cool nearby perception sensors **1718**. First return channels **1726***a* are fluidly connected to the heat exchangers **1742** and are configured to receive the fluid **1701** after it has been heated/cooled by the heat exchangers **1742**. The second delivery valves **1708***b* can be selectively opened/closed to permit the heated/cooled fluid **1701** to flow from the delivery system **1706** and along one or more parallel second delivery channels **1728***b* to pre-nozzle delivery valves **1723** (e.g., controller-operable solenoid valves, check valves, etc.). Each of the pre-nozzle delivery valves **1723** is configured to selectively route the fluid **1701** to (i) a nozzle **1717** configured to spray the fluid **1701** onto a corresponding one of the sensors **1718** or (ii) a second return channel **1126***b*.

[0130] In the illustrated embodiment, each of the first return channels **1726***a* includes a first return check valve **1732***a* and each of the second return channels **1726***b* includes a second return check valve **1732***b*. The first return channels **1726***a* and the second return channels **1726***b* corresponding to the same one of the sensors **1718** are merged together via a return T-connector **1734** into a single return channel **1748** received by a corresponding one of the return valves **1720** of the delivery system **1706**. In the illustrated embodiment, three channels are used to carry the fluid **1701** between the delivery system **1706** (e.g., the first delivery channels **1728***a*, the second delivery channels **1728***b*, and the single return channel **1748**) and each of the sensors **1718**. In some embodiments, these channels can comprise a three-lumen tubing **1739** (shown in cross-section

in FIG. **17**) that can be, for example, co-extruded. Such an arrangement can reduce the number of tubes/conduits required to service each of the sensors **1718**.

[0131] A controller **1724** can be operably coupled to the pump **1704**, a temperature sensor **1725** configured to sense the temperature of the fluid **1701** in and/or proximate to the delivery system **1706**, the delivery system **1706**, the sensors **1718**, and/or the pre-nozzle delivery valves **1723**. In operation, the controller **1724** is configured to receive a signal (e.g., a signal **1744**) from one or more of the sensors **1718** and determine whether the sensors **1718** require cleaning and/or thermal management. Based on the determination, the controller **1724** can operate the pump **1704** (e.g., by sending a control signal **1746**) and the delivery system **1706** to selectively heat and/or cool the fluid **1701** before opening one or more of the first delivery valves **1708***a* and/or the second delivery valves **1708***b* to route the heated/cooled fluid **1701** along the first delivery channels **1728***a* and/or the second delivery channels **1728***b* corresponding to the sensors **1718** requiring cleaning and/or thermal management. As described in detail above with reference to FIGS. **10-14** and **17**, the pre-nozzle delivery valves **1723** allow for the fluid **1701** in the second delivery channels **1728***b* to be recirculated back into the delivery system **1706** and/or the reservoir **1702** to be reheated. For example, to recirculate the fluid **1701** in the second delivery channels **1728***b*, the controller **1724** can activate the pump **1704** to pump the fluid **1701** through the second delivery valves **1708***b* while (i) opening the return valves **1720** of the delivery system **1706** if the pre-nozzle delivery valves **1723** are check valves (or other passive valves) or (ii) actuating the pre-nozzle delivery valves **1723** to direct the fluid **1701** to the second return channels **1726***b* if the pre-nozzle delivery valves **1723** are controller-operable valves (e.g., solenoid valves). The first return check valves **1732***a* and the second return check valves **1732***b* are configured to inhibit or prevent back flow of the fluid **1701** from, for example, the delivery system **1706** into the first return channels **1726***a* and second return channels **1726***b* during recirculation.

[0132] Moreover, in some embodiments, the system **1710** can include fluid holding chambers (e.g., insulated chambers configured to hold a volume of the fluid **1701** that is between about 1-5 times greater than the expected volume of the fluid **1701** to be delivered by the nozzles **1717**) fluidly connected to the second delivery channels **1728***b*. In some such embodiments, the fluid holding chambers can be positioned near the nozzles **1717** and before the pre-nozzle delivery valves **1723**.

[0133] Accordingly, referring to FIGS. **15-17** together, a perception surface cleaning and temperature control system configured in accordance with the present technology can include (i) combined delivery channels for routing fluid together to a nozzle and a heat exchanger and a single return channel for recirculating the fluid from the heat exchanger (FIG. **15**), (ii) separate delivery channels for routing fluid to a nozzle and a heat exchanger and separate return channels for recirculating the fluid from the heat exchanger and proximate to the nozzle (FIG. **16**), and/or (iii) separate delivery channels for routing fluid to a nozzle and a heat exchanger and a combined return channel for recirculating the fluid from the heat exchanger and proximate to the nozzle (FIG. **17**).

V. Selected Embodiments of Systems for Cleaning and Drying Vehicle Components

[0134] As set forth above, many perception components require or can benefit from surface cleaning with a fluid (e.g., heated washer fluid). Often, the same perception components and/or other components can also benefit from drying or cleaning via forced air. For example, in some instances a perception sensor's ability to "see" may be hindered by the presence of water or dust on the surface of the sensor. Water droplets may occur due to rain, condensation, spraying of cleaning fluid, or some other source. While washer fluid might remove dust, the surface might require a second air drying step before vision is fully restored. Accordingly, referring again to FIG. **1**, in some embodiments of the present technology a cleaning system (e.g., the cleaning system **110**) can be configured to deliver forced air to one or more vehicle components (e.g., the sensors **108** and/or the perception surfaces **109**). For example, the cleaning system **110** can deliver forced air to one or components of the vehicle **100** to remove water droplets, dust, and/or other contaminants therefrom. That is, the cleaning system can selectively blow air across one or more perception surfaces to provide improved surface cleaning, clearing, and drying. In some embodiments, the cleaning system **110** is configured to deliver air at high velocities, pre-dry the air, and/or warm the air. In some embodiments, the cleaning system **110** can also deliver washer fluid to clean the vehicle components and/or deliver fluid to thermally control the components.

[0135] The source of forced air can be a blower, an air compressor, an air accumulator and/or another source. In some embodiments, the cleaning system **110** includes a valve system that selectively routes the air to a heating and/or drying system and back to the valve system before being routed to one or more air distribution channels. In some embodiments, the valve system does not select an air flow containing conduit, but rather pressurizes a plenum which delivers forced air to multiple channels at once. In some embodiments, forced air is delivered continuously during vehicle operation, as forced air may help prevent occlusion of vehicle components. In other embodiments, forced air can be selectively provided.

[0136] In some embodiments, washer fluid and forced air may be routed from a central valve system (e.g., manifold) to a plurality of nozzles configured to deliver the air and fluid. The air and fluid may be delivered through the same nozzle or nozzles, or may be delivered through separate nozzles. In other embodiments, washer fluid and forced air may be routed from a central valve system to one or more peripheral valve systems (e.g., hierarchical manifolds), which route the washer fluid and air to the nozzles.

[0137] In some embodiments, the cleaning system **110** includes (i) a washer fluid manifold and valve system configured to direct flow to a flow channel (e.g., a hose, tube, etc.) corresponding to a vehicle component to be cleaned and (ii) an air flow manifold and valve system configured to direct airflow to a flow channel (e.g., a hose, tube, etc.) corresponding to the vehicle component to be cleaned and/or dried. In other embodiments, distribution of washer fluid and air is accomplished via a common manifold in which either washer fluid or compressed air may be selected as the input fluid and routed—via a tube that may hold either washer fluid or compressed air—to a common nozzle which applies the washer fluid and/or the air to the vehicle component.

[0138] In some embodiments, the cleaning system **110** can be configured to recirculate washer fluid. For example, the cleaning system **110** can include a tube configured to carry fluid from a valve system to a nozzle, and another tube configured to carry fluid back from the nozzle to the valve system. Washer fluid may be pumped so as to recirculate in the tubes without spraying out of the nozzle. When a surface needs cleaning, the recirculation of fluid is stopped and compressed air is allowed to flow into the tubes, forcing washer fluid out of the nozzle under high pressure. Subsequently, the recirculation pathway can be re-opened, forcing liquid out of the remainder of the tubing flowing towards the nozzle. When the tubing behind the nozzle has cleared of liquid, the recirculation pathway can be closed again, causing the forced air to exit the nozzle to dry the surface.

[0139] In some embodiments, tubes for carrying air and fluid can be combined into a dual-lumen tubing. For example, the air and fluid can be carried by a coaxial conduit including an inner channel for carrying washer fluid and an outer channel for carrying air. In some such embodiments, the inherent proximity of the inner and outer channels provides for advantageous heat transfer between the air and the liquid washer fluid. Alternatively, the flow channels may be side-by-side in parallel tubes or in co-extruded multi-lumen tubing. As the volumetric flow rates of washer fluid and air may differ significantly, the diameters of the flow paths within the tubing may not be the same.

[0140] FIGS. **18-23** are schematic illustrations more specifically illustrating various embodiments of closed-loop systems for cleaning and/or drying vehicle components configured in accordance with embodiments of the present technology. The detailed description of each embodiment focuses mainly on those components that are new/different as compared to other embodiments. However, one skilled in the art will appreciate that the various embodiments can (i) include the same or generally similar features (e.g., components, configurations, etc.), (ii) operate the same or generally similarly, and/or (iii) that the various embodiments can be combined. Further, one skilled in the art will appreciate that the various embodiments discussed with reference to FIGS. **18-23** can (i) include the same or generally similar features (e.g., components, configurations, etc.) as those embodiments discussed with reference to FIGS. **2-17**, (ii) can operate the same or generally similarly as those embodiments discussed with reference to FIGS. **2-17**, and/or (iii) can be combined with each other and/or the embodiments discussed with reference to FIGS. **2-17**. Moreover, one of ordinary skill in the art will appreciate that the number of components can vary in the following embodiments. For example, the systems of the present technology can have any number of delivery channels, return channels, sensors, heaters, chillers, heat exchangers, nozzles, etc.

[0141] FIG. **18** is a schematic illustration of a perception surface cleaning and drying system **1810** configured in accordance with an embodiment of the present technology. In the illustrated embodiment, the system **1810** includes a washer fluid pump **1804** configured to pump washer fluid **1801** from a reservoir **1802** to a delivery system **1850** (e.g., a manifold, valve system, etc.) having a plurality of fluid delivery valves **1808** and a single return valve **1820**. A heater **1812** (e.g., a parasitic and/or electric heater) is configured to heat the fluid **1801**. A bypass valve (e.g., a three-way bypass valve) **1851** can be selectively opened/closed to permit the fluid **1801** to flow to the heater **1812** for heating and subsequently back into the delivery system **1850**. The fluid delivery valves **1808** can be selectively opened/closed to permit the fluid **1801** to flow from the delivery system **1850** and along one or more parallel fluid delivery channels **1828** to corresponding holding chambers **1816**. Each of the holding chambers **1816** is fluidly connected to a nozzle **1817** via a pre-nozzle check valve **1821**. The nozzles **1817** are configured to distribute or spray the fluid **1801** onto corresponding perception sensors **1818** to clean the sensors **1818** (e.g., clear the sensors **1818** of occlusions). The pre-nozzle check valves **1821** are configured to selectively fluidly connect the holding chambers **1816** to corresponding (i) ones of the nozzles **1817** or (ii) return channels **1826** configured to return the fluid **1801** to the reservoir **1802** and/or the delivery system **1850**. In the illustrated embodiment, each of the return channels **1826** includes a return check valve **1832**, and the return channels **1826** are merged together via a return T-connector **1834** into a single channel received by the single return valve **1820** of the delivery system **1850**. As described in detail above, this arrangement can enable the selective recirculation of the fluid **1801** from the holding chambers **1816**.

[0142] In the illustrated embodiment, the system **1810** further includes a forced air source **1852** (e.g., a blower, an air compressor, and/or a compressed air accumulator) configured to provide air flow to the delivery system **1850**. More specifically, the delivery system **1850** can include an air manifold **1854** that divides the air flow from the air source **1852** into one or more parallel air delivery channels **1858**. In operation, the air flows through the air delivery channels **1858** to nozzles **1855** configured to direct the air against corresponding ones of the sensors **1818**. In one aspect of this embodiment, the delivery system **1850** does not select an air flow containing conduit, but rather pressurizes the air manifold **1854** which delivers forced air to all of the air delivery channels **1858** at once.

[0143] A controller **1824** can be operably coupled to the pump **1804**, the air source **1852**, the delivery system **1850**, and the sensors **1818**. When the controller **1824** determines that one or more of the perception sensors **1818** are occluded, the controller **1824** can close the return valve **1820** and selectively engage the pump **1804** and the associated one or more of the fluid delivery valves **1808** to route the fluid **1801** along the selected fluid delivery channels **1828** to the nozzles **1817** corresponding to the occluded sensors **1818** to clean the corresponding occluded sensors **1818**. Similarly, the controller **1824** can control the air source **1852** to provide air flow at the sensors **1818**. In some embodiments, the controller **1824** is configured to trigger air flow soon after and/or during delivery of the fluid **1801** to one or more of the sensors **1818**. For example, forced air can be provided immediately after delivery of the fluid **1801** to dry the sensors **1818**.

[0144] In some embodiments, the air source **1852** is operated continuously during operation of a vehicle incorporating the system **1810** to, for example, help prevent occlusion of the sensors **1818**. In other embodiments, the controller **1824** can selectively engage the air source **1852** during operation.

[0145] FIG. **19** is a schematic illustration of a perception surface cleaning and drying system **1910** configured in accordance with another embodiment of the present technology. In the illustrated embodiment, a fluid pump **1904** is configured to deliver washer fluid **1901** from a reservoir

1902 to a delivery system 1950 for heating via a heater 1912 and subsequent delivery to one or more perception sensors 1918 and/or recirculation to the reservoir 1902, as described in detail above. In some embodiments, the fluid delivery components of the system 1910 are identical to those of the system 1810 described in detail above with reference to FIG. 18.

[0146] In the illustrated embodiment, however, the system 1910 includes an air source comprising an air compressor 1957 and a compressed air accumulator 1959 configured to provide air flow to the delivery system 1950. For example, the delivery system 1950 can include an air manifold 1954 that divides the air flow from the air source into one or more parallel air delivery channels 1958. In the illustrated embodiment, the delivery system 1950 includes an air accumulator valve 1960 that can be opened/closed to allow air flow into the air manifold 1954. When the air accumulator valve 1960 is open and the air source is activated, air flows through the air delivery channels 1958 to nozzles 1955 configured to direct the air against corresponding ones of the sensors 1918.

[0147] A controller 1924 can be operably coupled to the pump 1904, the air source (e.g., the air compressor 1957), the delivery system 1950, the sensors 1918, and one or more delivery system sensors 1962 (e.g., temperature sensors, pressure gauges, transducers, and/or other sensors for sensing a condition, parameter, etc., of the fluid 1901 and/or air within and/or proximate to the delivery system 1950). When the controller 1924 determines that one or more of the sensors 1918 are occluded, the controller 1924 can route the fluid 1901 to the nozzles 1917 corresponding to the occluded sensors 1918 to clean the corresponding occluded sensors 1918. Similarly, the controller 1924 can control the air source (e.g., the air compressor 1957) and open the air accumulator valve 1960 to provide air flow at the sensors 1918. In some embodiments, the controller 1924 is configured to trigger air flow soon after and/or during delivery of the fluid 1901 to one or more of the sensors 1918. For example, forced air can be provided immediately after delivery of the fluid 1901 to dry the sensors 1918.

[0148] FIG. 20 is a schematic illustration of a perception surface cleaning and drying system 2010 configured in accordance with another embodiment of the present technology. In the illustrated embodiment, a fluid pump 2004 is configured to deliver washer fluid 2001 from a reservoir 2002 to a delivery system 2050 for heating via a heater 2012 and subsequent delivery to one or more perception sensors 2018 and/or recirculation to the reservoir 2002, as described in detail above. In some embodiments, the fluid delivery components of the system 2010 are identical to those of the system 1810 and/or the system 1910 described in detail above with reference to FIGS. 18 and 19. Likewise, the system 2010 includes an air source comprising an air compressor 2057 and a compressed air accumulator 2059 configured to provide air flow to the delivery system 2050.

[0149] In the illustrated embodiment, however, the delivery system 2050 includes an air manifold 2054 that divides the air flow from the air source into one or more parallel air delivery channels 2058, and a plurality of air delivery valves 2060 that can be selectively opened/closed to allow air flow into individual ones of the air delivery channels 2058. That is, one or more of the air delivery valves 2060 can be selectively opened to allow air to flow through a corresponding one of the air delivery channels 2058 to a nozzle 2055 configured to direct the air against a corresponding one of the sensors 2018.

[0150] A controller 2024 can be operably coupled to the pump 2004, the air source (e.g., the air compressor 2057), the delivery system 2050, the sensors 2018, and one or more delivery system sensors 2062 (e.g., temperature sensors, pressure gauges, transducers, and/or other sensors for sensing a condition, parameter, etc., of the fluid 2001 and/or air within and/or proximate to the delivery system 2050). When the controller 2024 determines that one or more of the sensors 2018 are occluded, the controller 2024 can route the fluid 2001 to the nozzles 2017 corresponding to the occluded sensors 2018 to clean the corresponding occluded sensors 2018. Similarly, the controller 2024 can control the air source (e.g., the air compressor 2057) and selectively open one or more of the air delivery valves 2060 to provide air flow to corresponding ones of the sensors 2018.

[0151] FIG. 21 is a schematic illustration of a perception surface cleaning and drying system 2110 configured in accordance with another embodiment of the present technology. In the illustrated embodiment, a fluid pump 2104 is configured to deliver washer fluid 2101 from a reservoir 2102 to a delivery system 2150 for heating via a heater 2112. The delivery system 2150 is configured to selectively deliver (e.g., via actuation of one or more delivery valves) the fluid 2101 along one or more parallel fluid delivery channels 2128 to corresponding holding chambers 2116. The system 2110 further includes an air source comprising an air compressor 2157 and a compressed air accumulator 2159 configured to provide air flow to the delivery system 2150. The delivery system 2150 includes an air manifold 2154 that divides the air flow from the air source into one or more parallel air delivery channels 2158, and a plurality of air delivery valves 2160 that can be selectively opened/closed to allow air flow into individual ones of the air delivery channels 2158.

[0152] In the illustrated embodiment, the air delivery channels 2158 and the fluid delivery channels 2128 for each of the sensors 2118 are joined together via a T-connector 2166 connected to an air and fluid delivery nozzle 2164. That is, the nozzles 2164 are configured to both (i) distribute or spray the fluid 2101 onto the sensors 2118 to clean the sensors 2118 (e.g., to clear the sensors 2118 of occlusions) and (ii) direct the air against the sensors 2118 to clean, dry, etc., the sensors 2118. In the illustrated embodiment, an air flow check valve 2167 inhibits or prevents back flow of the fluid 2101 into the air delivery channels 2158. Similarly, a fluid flow check valve 2169 inhibits or even prevents back flow of air into the fluid delivery channels 2128.

[0153] A controller 2124 can be operably coupled to the pump 2104, the air source (e.g., the air compressor 2157), the delivery system 2150, the sensors 2118, and one or more delivery system sensors 2162. When the controller 2124 determines that one or more of the sensors 2118 are occluded, the controller 2124 can route the fluid 2101 to the nozzles 2164 corresponding to the occluded sensors 2118 to clean the corresponding occluded sensors 2118. Similarly, the controller 2124 can control the air source (e.g., the air compressor 2157) and selectively open one or more of the air delivery valves 2160 to provide air flow to the occluded sensors 2118 via the same nozzles 2164. In some embodiments, air can be delivered after the fluid 2101 to, for example, dry the sensors 2118. In other embodiments, the

fluid **2101** and air can be delivered simultaneously, or air can be delivered before the fluid **2101**.

[0154] FIG. **22** is a schematic illustration of a perception surface cleaning and drying system **2210** configured in accordance with another embodiment of the present technology. In the illustrated embodiment, a pump **2204** is configured to deliver washer fluid **2201** from a reservoir **2202** to a delivery system **2250** for heating via a heater **2212**. The delivery system **2250** includes a fluid and air delivery manifold **2268** including a plurality of delivery valves **2208**. The system **2210** further includes an air source comprising an air compressor **2257** and a compressed air accumulator **2259** configured to provide air flow to the delivery system **2250**. More specifically, in the illustrated embodiment the air source is selectively connected to the delivery manifold **2268** via an air delivery valve **2260**. By this arrangement, the delivery manifold **2268** is connected to both the air source and the fluid reservoir **2202** and is configured to divide and deliver the fluid **2201** along one or more parallel delivery channels **2228** to holding chambers **2216**.

[0155] Each of the holding chambers **2216** is fluidly connected to an air and fluid delivery nozzle **2264** via a pre-nozzle check valve **2221**. The pre-nozzle check valves **2221** are configured to selectively fluidly connect the holding chambers **2216** to corresponding (i) ones of the nozzles **2217** or (ii) return channels **2226** configured to return the fluid **2201** to the reservoir **2202** and/or the delivery system **2206**. For example, in the illustrated embodiment each of the return channels **2226** includes a return check valve **2232**, and the return channels **2226** are merged together via a return T-connector **2234** into a single channel received by a single return valve **2220** of the delivery system **2250**. As described in detail above, this arrangement allows for the recirculation of the fluid **2201** from the holding chambers **2216** to the fluid reservoir **2202**.

[0156] A controller **2224** can be operably coupled to the pump **2204**, the air source (e.g., the air compressor **2257**), the delivery system **2250**, the sensors **2218**, and one or more delivery system sensors. When the controller **2224** determines that one or more of the sensors **2218** are occluded, the controller **2224** can route the fluid **2201** to the nozzles **2264** corresponding to the occluded sensors **2218** to clean the corresponding occluded sensors **2218**. More specifically, the controller **2224** can close the return valve **2220** of the delivery system **2250** while operating the pump **2204** and/or the air source (e.g., the air compressor **2257**) to increase the pressure in the delivery channels **2228** above the cracking-pressure of the pre-nozzle check valves **2221**. That is, either or both of the pump **2204** and the air source can be selectively operated to provide the required pressure for delivering the fluid **2201** from the nozzles **2264**.

[0157] When the air source is used to initiate delivery of the fluid **2201**, the air flows behind the fluid **2201** in the delivery channels **2228**, thereby driving the fluid **2201**. In one aspect of the present technology, as the fluid **2201** is ejected from the holding chambers **2216** through the nozzles **2264**, the fluid **2201** within the delivery channels **2228** flows to refill the holding chamber **2216**, while compressed air fills part or all of the delivery manifold **2268**, and possibly a portion of the delivery channels **2228**. Pressure moves through the fluid **2201** at the speed of sound resulting in nearly instantaneous commencement of fluid flow from the nozzles **2264**. Moreover, the fluid **2201** is expelled through the nozzle **2264** at a high rate depending on the pressure in and the volume of the air source. In some embodiments, for example, the fluid **2201** can be expelled at a rate of about 50 milliliters per second. Delivery of 5 milliliters of the fluid **2201** can therefore occur within about 0.1 second of the opening of the air delivery valve **2260**.

[0158] To stop delivery of the fluid **2201** from the nozzles **2264**, the controller **2224** can close the air delivery valve **2260**, open the return valve **2220**, and/or close the selected delivery valves **2208**. If forced air delivery to the sensors **2218** is not desired, the air delivery valve **2260** is closed, and the pump **2204** can pump the fluid **2201** through the delivery system **2250** to (i) refill the selected delivery channels **2228** and the holding chambers **2216** and (ii) expel any remaining air entrapped in the delivery manifold **2268** and/or the delivery channels **2228** into the washer fluid reservoir **2202**. If forced air delivery to the sensors **2218** is desired, the air delivery valve **2260** and the return valve **2220** are opened (or remain open). This allows pressurized air to continue to drive the fluid **2201** out of the selected delivery channels **2228** and the holding chambers **2216**. After a short period (e.g., less than about 3 seconds, less than about 1 second, less than about 0.5 second, etc.) in which the fluid **2201** is forced through the return channels **2226** and into the reservoir **2202**, the return valve **2220** can be closed. This allows the air source to increase the pressure within the holding chambers **2216** above the cracking pressure of the pre-nozzle check valves **2221** so that the pre-nozzle check valves **2221** open, thereby allowing air to be expelled onto the sensors **2218**.

[0159] In some embodiments, the delivery channels **2228** (e.g., tubes) can have a relatively small inner diameter (e.g., about 4 millimeters) such that the volume per unit length of the delivery channels **2228** is relatively small (e.g., about 12.6 milliliters per meter of length of a 4-millimeter inner diameter tube). The volume of the fluid **2201** desired to be delivered to the sensors **2218** can vary depending on the size of the sensors **2218** (e.g., a surface size), the type of occlusion, environmental factors, etc. However, the volume to be delivered may be quite small, such as 1 milliliter per square centimeter. A small (e.g., 2.5-centimeter diameter circular surface of one of the sensors **2218**) might require 5 milliliters of hot washer fluid or less.

[0160] FIG. **23** is a schematic illustration of a perception surface cleaning and drying system **2310** configured in accordance with another embodiment of the present technology. In the illustrated embodiment, a fluid pump **2304** is configured to deliver washer fluid **2301** from a reservoir **2302** to a delivery system **2350** for heating via a heater **2312** (e.g., a parasitic heater configured to transfer heat generated by a vehicle engine **2314** (or other system) to the fluid **2301**. The delivery system **2350** is configured to selectively deliver the fluid **2301**—via actuation of one or more fluid delivery valves **2308**—along one or more parallel fluid delivery channels **2328** to perception sensors **2318** to clean the sensors **2318**. The system **2310** further includes an air source **2352** comprising a blower. The delivery system **2350** includes an air manifold that divides the air flow from the air source **2352** into one or more parallel air delivery channels **2358**, and a plurality of air delivery valves **2360** that can be selectively opened/closed to allow air flow into individual ones of the air delivery channels **2358**.

[0161] In the illustrated embodiment, the delivery system **2350** is configured to selectively route the air from the air source **2352** to the heater **2312** to heat the air. More

specifically, a controller **2324** can be operably coupled to the delivery system **2350**, the air source **2352**, the sensors **2318**, the pump **2304**, temperature sensors, pressure sensors, and/or other components of the system **2310**. In some embodiments, the controller **2324** can control the delivery system **2350** and/or the air source **2352** to selectively route all of the air to the heater **2312** or to bypass the heater **2312** and remain unheated. In other embodiments, the delivery system **2350** may direct only a first portion/volume of air to the heater **2312** for heating. The first portion can subsequently mix with a remaining second portion/volume of air that bypasses the heater **2312** within a volume of the delivery system **2350** (e.g., within the air manifold) to achieve an air temperature in between that of the air exiting the air source **2352** and the air exiting the heater **2312**. For example, in some embodiments the delivery system **2350** may contain a variable aperture valve to direct a portion of the air to the heater **2312**. In other embodiments, the delivery system **2350** can include a three-way valve that selectively connects (e.g., based on a control signal from the controller **2324**) the air source **2352** to (i) the air manifold and the air delivery valves **2360** or (ii) the heater **2312**. In yet other embodiments, the various valves of the delivery system **2350** can be individually controlled solenoid valves or may be combined into a rotary valve system.

[0162] When the controller **2324** determines that one or more of the sensors **2318** are occluded, the controller **2324** can route the fluid **2301** to fluid delivery nozzles **2317** corresponding to the occluded sensors **2318** to clean the corresponding occluded sensors **2318**. Similarly, the controller **2324** can control the air source **2352** and the delivery system **2350** to provide heated and/or unheated air flow to the occluded sensors **2318** via nozzles **2355**.

[0163] As one of ordinary skill in the art will appreciate, any of the embodiments described with reference to FIGS. **18-22** can be modified to include heating air prior to delivering the air to one or more occluded sensors.

VI. Selected Embodiments of Systems for Cleaning, Drying, and Thermally Managing Vehicle Components

[0164] As set forth above, many vehicle components require or can benefit from surface cleaning with a fluid (e.g., heated washer fluid), surface cleaning or drying via forced air, and/or temperature control. Accordingly, referring again to FIG. **1**, in some embodiments of the present technology a cleaning system (e.g., the cleaning system **110**) can be configured to (i) heat and deliver fluid, such as washer fluid, to one or more vehicle components (e.g., the sensors **108** and/or the perception surfaces **109**), (ii) to deliver forced air to clean, dry, remove contaminants, etc., from the vehicle components, and (iii) control a temperature (heat and/or cool) of the vehicle components.

[0165] Accordingly, FIGS. **24** and **25** are schematic illustrations more specifically illustrating various embodiments of closed-loop systems for cleaning, drying, and thermally managing vehicle components configured in accordance with embodiments of the present technology. The detailed description of each embodiment focuses mainly on those components that are new/different as compared to other embodiments. However, one skilled in the art will appreciate that the various embodiments can (i) include the same or generally similar features (e.g., components, configurations, etc.), (ii) operate the same or generally similarly, and/or (iii) that the various embodiments can be combined. Further, one skilled in the art will appreciate that the various embodiments discussed with reference to FIGS. **24** and **25** can (i) include the same or generally similar features (e.g., components, configurations, etc.) as those embodiments discussed with reference to FIGS. **2-23**, (ii) operate the same or generally similarly as those embodiments discussed with reference to FIGS. **2-23**, and/or (iii) that the various embodiments can be combined with each other and/or with the embodiments discussed with reference to FIGS. **2-23**. Moreover, one of ordinary skill in the art will appreciate that the number of components can vary in the following embodiments. For example, the systems of the present technology can have any number of delivery channels, return channels, sensors, heaters, chillers, heat exchangers, nozzles, etc.

[0166] FIG. **24** is a schematic illustration of a vehicle component cleaning, drying, and thermal management system **2410** configured in accordance with an embodiment of the present technology. In the illustrated embodiment, a washer fluid pump **2404** is configured to pump washer fluid **2401** from a reservoir **2402** to a delivery system **2470** having a plurality of first fluid delivery valves **2408***a*, a plurality of second fluid delivery valves **2408***b*, a plurality of air delivery valves **2460**, and a plurality of return valves **2420**. A fluid heater **2412** (e.g., a parasitic heater configured to transfer heat generated by a vehicle engine **2414** (or other system) to the fluid **2401**) and a fluid cooler or chiller **2440** are individually connected to the delivery system **2470**. The delivery system **2470** is configured to route all or a portion of the fluid **2401** to the fluid heater **2412** and/or to the fluid cooler **2440** to heat/cool the fluid **2401**. The system **2410** also includes an air source **2452** configured to provide air flow to the delivery system **2450** (e.g., to an air manifold).

[0167] The air delivery valves **2460** can be selectively opened/closed to allow air to flow from the delivery system **2470** and along one or more parallel air delivery channels **2458** to air delivery nozzles (not shown) configured to direct the air against perception sensors **2418**. The first fluid delivery valves **2408***a* can be selectively opened/closed to permit the heated/cooled fluid **2401** to flow from the delivery system **2470** and along one or more parallel first fluid delivery channels **2428***a* to corresponding heat exchangers (not shown) configured to heat and/or cool the perception sensors **2418**. The second fluid delivery valves **2408***b* can be selectively opened/closed to permit the heated/cooled fluid **2401** to flow from the delivery system **2470** and along one or more parallel second fluid delivery channels **2428***b* to holding chambers **2416** and pre-nozzle delivery valves **2423** (e.g., controller-operable solenoid valves, check valves, etc.). Each of the pre-nozzle delivery valves **2423** is configured to selectively route the fluid **2401** to a nozzle **2417** configured to spray the fluid **2401** onto a corresponding one of the sensors **2418**. The fluid **2401** from the heat exchangers and/or recirculated from the holding chambers **2416** is aggregated in a single, common return channel **2448**.

[0168] A controller **2424** can be operably coupled to the pump **2404**, the air source **2452**, the delivery system **2470**, the sensors **2418**, temperature sensors, pressure sensors, and/or other components. When the controller **2424** determines that one or more of the sensors **2418** are occluded and/or require thermal management, the controller **2424** can operate the pump **2404** and the delivery system **2470** to selectively heat and/or cool the fluid **2401** before opening one or more of the first fluid delivery valves **2408***a* and/or

the second fluid delivery valves **2408***b* to route the heated/cooled fluid **2401** along the first fluid delivery channels **2428***a* and/or the second fluid delivery channels **2428***b* corresponding to the sensors **2418** requiring cleaning and/or thermal management. Similarly, the controller **2424** can control the air source **2452** and/or selectively open one or more of the air delivery valves **2460** to provide air flow to the occluded sensors **2418**. In some embodiments, air can be delivered after the fluid **2401** to, for example, dry the sensors **2418**. In other embodiments, the fluid **2401** and air can be delivered simultaneously, or air can be delivered before the fluid **2401**.

[0169] In some embodiments, to simplify plumbing of the various channels, a quad-lumen tubing **2449** can be used—wherein (i) a first lumen carries the fluid **2401** traveling from the delivery system **2470** to the holding chambers **2416**, (ii) a second lumen carries the fluid **2401** returning/recirculating from the heat exchangers and/or holding chambers **2416** to the delivery system **2470** and the reservoir **2402**, (iii) a third lumen carries cooling fluid from the delivery system **2470** to the heat exchangers, and (iv) a fourth lumen carries air from the delivery system **2470** to the sensors **2418**.

[0170] FIG. **25** is a schematic illustration of a vehicle component cleaning, drying, and thermal management system **2510** configured in accordance with another embodiment of the present technology. The system **2510** is generally similar to the system **2410** described in detail with reference to FIG. **34**, but the valving of delivery system **2570** is illustrated in greater detail. In the illustrated embodiment, a washer fluid pump **2504** is configured to pump washer fluid **2501** from a reservoir **2502** to the delivery system **2570**. A first 3-way valve **2551***a* receives the flow of the fluid **2501** and either directs the flow to a parasitic heater **2512** or bypasses the flow past the parasitic heater **2512**. In either case, a second 3-way valve **2551***b* receives the flow of the fluid **2501** and directs the flow to an electric heater **2513** or bypasses the flow past the electric heater **2513**. Any of the fluid **2501** exiting the electric heater **2513** is routed to second fluid delivery valves **2508***b*. Any of the fluid **2501** bypassing the electric heater **2513** is received by a third 3-way valve **2551***c* and directs the flow (i) to the second fluid delivery valves **2508***b* or (ii) to a fluid chiller or cooler **2540** for cooling. Cooled fluid **2501** from the fluid cooler is directed to first fluid delivery valves **2508***a*. The first fluid delivery valves **2508***a* can be selectively opened/closed to permit the cooled fluid **2501** to flow from the delivery system **2570** and along one or more parallel first fluid delivery channels **2528***a* to corresponding heat exchangers (not shown) configured to heat and/or cool nearby perception sensors **2518**. The second fluid delivery valves **2508***b* can be selectively opened/closed to permit the heated/unheated fluid **2501** to flow from the delivery system **2570** and along one or more parallel second fluid delivery channels **2528***b* to holding chambers **2516** and pre-nozzle check valves **2523** (e.g., controller-operable solenoid valves, check valves, etc.). While six first fluid delivery channels **2528***a* and six second fluid delivery channels **2528***b* are shown in FIG. **25**, the system **2510** can include any number of delivery channels.

[0171] To provide hot fluid **2501** during normal hot engine operation, the delivery system **2570** is configured to route the fluid **2501** (i) from the first 3-way valve **2551***a* to the parasitic heater **2512**, (ii) from the parasitic heater **2512** to the second 3-way valve **2551***b*, (iii) from the second 3-way valve **2551***b* to the second fluid delivery valves **2508***b*. To provide hot fluid **2501** during engine startup (or when the parasitic heater **2512** is otherwise unable to provide heated fluid), the delivery system **2570** is configured to route the fluid **2501** (i) from the first 3-way valve **2551***a* to the second 3-way valve **2551***b* bypassing the parasitic heater **2512**, (ii) from the second 3-way valve **2551***b* to the electric heater **2513**, and (iii) from the electric heater **2513** to the second fluid delivery valves **2508***b*. To provide unheated fluid **2501**, the delivery system **2570** is configured to route the fluid **2501** (i) from the first 3-way valve **2551***a* to the second 3-way valve **2551***b* bypassing the parasitic heater **2512**, (ii) from the second 3-way valve **2551***b* to the third 3-way valve **2551***c* bypassing the electric heater **2513**, and (iii) from the third 3-way valve **2551***c* to the second fluid delivery valves **2508***b* bypassing the fluid cooler **2540**. To provide cooled fluid **2501**, the delivery system **2570** is configured to route the fluid **2501** (i) from the first 3-way valve **2551***a* to the second 3-way valve **2551***b* bypassing the parasitic heater **2512**, (ii) from the second 3-way valve **2551***b* to the third 3-way valve **2551***c* bypassing the electric heater **2513**, and (iii) from the third 3-way valve **2551***c* to fluid cooler **2540**, and (iv) from the fluid cooler **2540** to the first fluid delivery valves **2508***a*.

[0172] As one example, in the illustrated embodiment a first perception sensor **2518***a* needs to be cleaned and so hot fluid **2501** is directed to its surface by opening a first one of the second fluid delivery valves **2508***b-a* and closing a return valve **2520** of the delivery system **2570** so that the pressure in a first holding chamber **2516***a* exceeds the cracking pressure of a first pre-nozzle check valve **2523***a* and the fluid **2501** flows through and exits a first nozzle **2517***a*. To maintain hot fluid **2501** in the first holding chamber **2516***a*, the fluid **2501** may be recirculated by opening (i) the first one of the second fluid delivery valves **2508***b-a* and (ii) opening the return valve **2520** while pumping heated fluid **2501** to the second fluid delivery valves **2508***b*. The fluid **2501** returning to the reservoir **2502** goes through a first return check valve **2532***a* to a single return channel **2548** connected to the return valve **2520**

[0173] The system **2510** further includes an air source **2552** connected to the delivery system **2570**. In the illustrated embodiment, a fourth 3-way valve **2551***d* receives the air flow from the air source **2552** and directs the air flow (i) to an air heater **2579** (which could be the parasitic heater **2512** and/or the electric heater **2513**) or (ii) to bypass the air heater **2579**. In either case, the air is directed to air delivery valves **2560**. The air delivery valves **2560** can be selectively opened/closed to allow air to flow from the delivery system **2570** and along one or more parallel air delivery channels **2558** to air delivery nozzles (not shown) configured to direct the air against the sensors **2518**.

[0174] As a second example, in the illustrated embodiment a second perception sensor **2518***b* needs to be cleaned, cooled, and air dried. Accordingly, heated fluid **2501** can be directed to a second nozzle **2517***b* by opening a second one of the second fluid delivery valves **2508***b-b* and closing the return valve **2520**, as described in detail above. Similarly, a cooled fluid **2501** can be directed to the second perception sensor **2518***b* by opening a second one of the first fluid delivery valves **2508***a-b* and opening the return valve **2520**. The fluid **2501** used to cool the second perception sensor **2518***b* is subsequently returned to the delivery system **2570** via a second return check valve **2532***b* to the return channel **2548**. Similarly, heated or unheated air can be directed

against the second perception sensor **2518***b* by opening a second one of the air delivery valves **2560***b*.

[0175] In some embodiments, any of the 3-way valves **2551***a*-2551*d* can be variable aperture valves or other types of valves.

VII. Selected Embodiments of Perception Surface Cleaning Systems with Multiple Delivery Systems

[0176] Referring again to FIG. **1**, in some embodiments of the present technology a cleaning system (e.g., the cleaning system **110**) can distribute fluids to clean and/or cool vehicle components (e.g., the sensors **108** and/or the perception surfaces **109**) using any suitable combination of valves, manifolds, etc. For example, in some embodiments the cleaning system **110** can distribute fluid to one or more channels by selectively opening/closing one or more valves (e.g., electrically-actuated solenoid valves) co-located at (e.g., mounted to or built into) a shared delivery system or manifold. In other embodiments, the valves may be located distant from one another. In other embodiments, the cleaning system **110** includes one or more rotary valves that are adjustable to distribute the fluid to the channels.

[0177] In some embodiments, the cleaning system includes two or more delivery systems arranged hierarchically. That is, for example, a central collection of valves (e.g., a first or central delivery system) can route fluid to a plurality of first channels which can each distribute the fluid (i) either to a vehicle component to be cleaned (ii) or to another collection of valves (e.g., a second or peripheral delivery system), which can route the fluid on to one or more second channels. In some such embodiments, each delivery system is configured to selectively direct flow to between three and eight channels, using between three and eight valves. In some embodiments, the delivery systems are connected in series to comprise a system capable of selectively directing flow to a larger number of channels. In some embodiments, if the delivery systems provide more channels than are required, one or more of the channels can be plugged instead of fluidly connected to a valve. In some embodiments, each delivery system connects to an electronic circuit board (e.g., via a modular electrical connector) configured to control the function of the valves.

[0178] In one aspect of the present technology, the use of multiple delivery system is advantageous when multiple sensors are located near to each other but remote from a central delivery system. For example, a central delivery system may be in the engine compartment of a vehicle, a cluster of sensors may be located on the rear bumper of the vehicle, and another cluster of sensors may be located on the roof of the vehicle. By utilizing multiple delivery systems to hierarchically route the fluid, the length and size of tubing traversing the vehicle may be greatly reduced.

[0179] Accordingly, FIGS. **26-28** are schematic illustrations more specifically illustrating various embodiments of closed-loop systems for cleaning vehicle components and including multiple, distributed delivery systems configured in accordance with embodiments of the present technology. The detailed description of each embodiment focuses mainly on those components that are new/different as compared to other embodiments. However, one skilled in the art will appreciate that the various embodiments can (i) include the same or generally similar features (e.g., components, configurations, etc.), (ii) operate the same or generally similarly, and/or (iii) that the various embodiments can be combined. Further, one skilled in the art will appreciate that the various embodiments discussed with reference to FIGS. **26-28** can (i) include the same or generally similar features (e.g., components, configurations, etc.) as those embodiments discussed with reference to FIGS. **2-25**, (ii) operate the same or generally similarly as those embodiments discussed with reference to FIGS. **2-25**, and/or (iii) that the various embodiments can be combined with each other and/or with the embodiments discussed with reference to FIGS. **2-25**. Moreover, one of ordinary skill in the art will appreciate that the number of components can vary in the following embodiments. For example, the systems of the present technology can have any number of delivery channels, return channels, sensors, heaters, chillers, heat exchangers, nozzles, etc.

[0180] FIG. **26** is a schematic illustration of a perception surface cleaning system **2610** including multiple, hierarchically arranged delivery systems configured in accordance with an embodiment of the present technology. In the illustrated embodiment, the system **2610** includes a washer fluid pump **2604** configured to pump washer fluid **2601** from a reservoir **2602** to a first delivery system **2606***a* (e.g., a manifold, valve system, etc.) having a plurality of first fluid delivery valves **2608***a*. The first fluid delivery valves **2608***a* can be selectively opened/closed to permit the fluid **2601** to flow from the first delivery system **2606***a* and along one or more first delivery channels **2628***a*. The first delivery channels **2628***a* can direct the fluid **2601** to one or more additional delivery systems **2606** (e.g., a second delivery system **2606***b* shown in FIG. **26**) and/or one or more first perception sensors **2618***a* to clean the first perception sensors **2618***a*. The second delivery system **2606***b* includes a plurality of second fluid delivery valves **2608***b* configured to selectively route the fluid **2601** along one or more second delivery channels **2628***b* to one or more additional delivery systems **2606** (e.g., a third delivery system **2606***c* shown in FIG. **26**) and/one or more second perception sensors **2618***b* to clean the second perception sensors **2618***b*. The third delivery system **2606***c* includes a plurality of third fluid delivery valves **2608***c* configured to selectively route the fluid **2601** along one or more third delivery channels **2628***c* to one or more third perception sensors **2618***c* to clean the third perception sensors **2618***c*. Accordingly, in the arrangement shown in FIG. **26**, the delivery systems **2606** are arranged in series.

[0181] FIG. **27** is a schematic illustration of a perception surface cleaning system **2710** including multiple delivery systems configured in accordance with an embodiment of the present technology. In the illustrated embodiment, the system **2710** includes a washer fluid pump **2704** configured to pump washer fluid **2701** from a reservoir **2702** to a first delivery system **2706***a* (e.g., a manifold, valve system, etc.) having a plurality of first fluid delivery valves **2708***a*. The first fluid delivery valves **2708***a* can be selectively opened/closed to permit the fluid **2701** to flow from the first delivery system **2706***a* and along one or more first delivery channels **2728***a* to clean first perception sensors **2718***a*. In the illustrated embodiment, the system **2710** further includes a second delivery system **2706***b* connected to the first delivery system **2706***a* via a fluid channel **2703** such that the first delivery system **2706***a* and the second delivery system **2706***b* are arranged in parallel. The second delivery system **2706***b* includes a plurality of second fluid delivery valves **2708***b* that can be selectively opened/closed to permit the fluid **2701** to flow from the second delivery system **2706***b*

and along one or more second delivery channels **2728***b* to clean second perception sensors **2718***b*. In other embodiments, one or more additional delivery systems can be arranged in parallel with the first delivery system **2706***a* and/or the second delivery system **2706***b* to, for example, increase the number of fluid distribution channels available in a given region of a vehicle. In some embodiments, the first delivery system **2706***a* and the second delivery system **2706***b* are modular systems.

[0182] FIG. **28** is a schematic illustration of a perception surface cleaning system **2810** including multiple delivery systems configured in accordance with another embodiment of the present technology. More particularly, the system **2810** includes several features generally similar to the system **2210** described in detail above with reference to FIG. **22** but, in the illustrated embodiment, the system **2810** includes multiple hierarchically arranged delivery systems **2850**, including a central delivery systems **2850***a* and a plurality of peripheral delivery systems **2850***b*. In some embodiments, the peripheral delivery systems **2850***b* can be closer to perception sensors **2818** than the central delivery system **2850***a*. In one aspect of the present technology, this architecture may be advantageous when the sensors **2818** are arranged in clusters remote from the central delivery system **2850***a*. For example, the central delivery system **2850***a* may be in the engine compartment of a vehicle, while the sensors **2818** may be located in clusters on the rear bumper of the vehicle, on the roof of the vehicle, etc. By utilizing multiple delivery systems to hierarchically route washer fluid, the length and size of tubing traversing the vehicle may be greatly reduced.

[0183] In the illustrated embodiment, a pump **2804** is configured to deliver washer fluid **2801** from a reservoir **2802** to the central delivery system **2850***a* for heating via a heater **2812**. An air source comprising an air compressor **2857** and a compressed air accumulator **2859** is configured to provide air flow to the central delivery system **2850***a*, which includes a plurality of central delivery valves **2808***a*. The central delivery valves **2808***a* can be selectively opened/closed to divide and deliver the fluid **2801** and/or air along one or more parallel first delivery channels **2828***a* to the peripheral delivery systems **2850***b*.

[0184] Individual ones of the peripheral delivery systems **2850***b* can include peripheral delivery valves **2808***b* that can be selectively opened/closed to divide and deliver the fluid **2801** and/or air along one or more parallel second delivery channels **2828***b* to holding chambers **2816**. Each of the holding chambers **2816** is fluidly connected to an air and fluid delivery nozzle **2864** via a pre-nozzle check valve **2821**. The pre-nozzle check valves **2821** are configured to selectively fluidly connect the holding chambers **2816** to corresponding (i) ones of the nozzles **2864** or (ii) second return channels **2826***b* configured to return the fluid **2801** and/or air to the peripheral delivery systems **2850***b* and, more particularly, through second return valves **2820***b* of the peripheral delivery systems **2850***b*. For example, in the illustrated embodiment each of the second return channels **2826***b* includes a second return check valve **2832***b*, and the second return channels **2826***b* are merged together (e.g., via a T-connector) into a single channel received by the corresponding one of the second return valves **2820***b*. Each of the peripheral delivery systems **2850***b* is, in turn, further connected to the central delivery system **2850***a* via first return channels **2826***a*. The first return channels **2826***a* can each include a first return check valve **2832***a* and can be merged together (e.g., via a T-connector) into a single channel received by a single first return valve **2820***a* of the central delivery system **2850***a*. As described in detail above, this arrangement allows for the recirculation of the fluid **2801** and/or air from the holding chambers **2816** to the fluid reservoir **2802**.

[0185] A controller **2824** can be operably coupled to the pump **2804**, the air source (e.g., the air compressor **2857**), the central delivery system **2850***a*, the peripheral delivery systems **2850***b*, the sensors **2818**, and any one or combination of additional sensors (e.g., temperature sensors, pressure sensors, etc.) When the controller **2824** determines that one or more of the sensors **2818** are occluded, the controller **2824** can route the fluid **2801** and/or air to the nozzles **2864** corresponding to the occluded sensors **2818** to clean and/or dry the corresponding occluded sensors **2818**. More specifically, the controller **2824** can close the first return valve **2820***a* of the central delivery system **2850***a* and the second return valve **2820***b* of the corresponding peripheral delivery system **2850***b* while operating the pump **2804** and/or the air source (e.g., the air compressor **2857**) to increase the pressure in the second delivery channels **2828***b* above the cracking-pressure of the pre-nozzle check valves **2821**. To recirculate the fluid **2801**, both the first return valve **2820***a* of the central delivery system **2850***a* and the second return valve **2820***b* of the corresponding one of the peripheral delivery systems **2850***b* can be opened, and the pump **2804** and/or the air source activated to recirculate the fluid **2801** and/or air to the reservoir **2802**. The first return check valves **2832***a* and the second return check valves **2832***b* are configured to inhibit backflow during recirculation.

VIII. Selected Embodiments of Fluid Holding, Fluid Heating, and/or Forced Airflow Devices

[0186] As described in detail above, some embodiments of the present technology can include fluid holding chambers configured to receive fluid (e.g., washer fluid) and hold and/or heat the fluid before delivering the fluid to a nozzle. In some embodiments, the fluid is heated and held within a desired temperature range within the holding chambers so that it is ready to be delivered. The holding chambers can be positioned proximate to the nozzles to, for example, reduce the distance the heated fluid must travel for delivery and therefore reduce fluid heat loss. In some embodiments, a flow divider can be connected to and/or integrally formed with one or more of the holding chambers such that the heated fluid can be subdivided after leaving the holding chamber for, for example, delivery to multiple perception surfaces or sensors.

[0187] In one aspect of the present technology, the holding chambers are configured to hold a minimum volume of fluid such that they can (i) vary a fluid pulse volume and/or (ii) deliver a series of fluid pulses in a short period of time. The larger the volume of fluid, the more energy is required for heating, and the longer the fluid will take to heat. Accordingly, the volume of fluid held within each of the heating chambers can be between an upper limit and a lower limit relative to a desired pulse volume. In some embodiments, each of the holding chambers can hold between one and five times the expected pulse volume for a particular channel. For example, if a sensor's required average fluid pulse is five milliliters, the holding chamber can hold between 5-25 milliliters of fluid. Likewise, if a sensor's required average

fluid pulse is 25 milliliters, the holding chamber can hold between 25-125 milliliters of fluid. In certain embodiments, the holding chambers are configured to hold about two times the expected pulse volume for an associated sensor surface.

[0188] Heat loss from a holding chamber to its surroundings is inefficient and wastes vehicle energy. Accordingly, in some embodiments the heating chambers are configured to minimize heat loss to the surrounding environment. For example, the holding chambers can be designed to minimize a ratio of surface area to volume to minimize heat transfer away from the holding chambers. For example, the heating chambers can have a ratio of surface area (SA) to volume (V) of about 1 cm^{-1}, or about the value defined by the function $SA/V=6.2V^{-0.33}$. Moreover, the holding chambers can be thermally insulated. For example, outer surfaces of the holding chambers can be fully or partially covered by an insulating material which reduces conductive heat transfer to the outer surfaces. In some embodiments, each of the holding chambers can be insulated by an outer shell which is separated from the outer surface of the heating chamber by a gap (e.g., an air gap, a vacuum gap, etc.). In yet other embodiments, the outer surfaces of the holding chambers can be covered with material (e.g., a thin layer of foil or other reflective material) which reflects radiated heat emitted from the chambers back into the chambers.

[0189] As cooler fluid may be less effective at cleaning surfaces than hotter fluid, delivery of fluid not within the desired temperature range should be minimized. Accordingly, in some embodiments the heating chambers can be located proximate to the nozzles configured to deliver the fluid for cleaning perception sensors or other vehicle components. This can minimize the heat lost by the fluid during transport from the holding chambers to the perception sensors. More specifically, in some embodiments the volume of fluid located in the flow path between the heating chambers and the nozzles is less than 20% of the volume of the average fluid pulse for the corresponding channels. For example, if a fluid pulse of 10 milliliters is used to clean a specific sensor, the volume of fluid between the heating chamber and the nozzle can be less than 2 milliliters. If this fluid is contained within a four-millimeter inner diameter hose, this equates to roughly 15 centimeters of hose length. As a further example, if a fluid pulse of 50 milliliters is used to clean a sensor, the volume of fluid between the heating chamber and the nozzle can be less than about 10 milliliters, or roughly 80 centimeters of four-millimeter inner diameter tubing.

[0190] In some embodiments, the fluid channels between the heating chambers and the nozzles can be insulated (e.g., covered with insulation) to reduce conductive and/or radiative heat transfer. In some embodiments, one one-way check valves are built into the heating chambers such that fluid may flow in a direction from the chamber to the nozzle, but not from the nozzle to the heating chamber.

[0191] In some embodiments, holding chambers can be configured as heating chambers including heating elements (e.g., electric heating elements) for heating washer fluid therein. In some embodiments, the heating chambers include a phase change material (PCM) used to store thermal energy and to provide the thermal energy to washer fluid flowing into the heating chambers. The electric heating elements may heat the fluid directly, or the electric heating elements may heat the PCM directly, and heat may be transferred to the fluid from the PCM. As described in detail above, in some embodiments unheated fluid is pumped into a holding chamber after fluid is delivered from a holding chamber through a nozzle to replace the delivered fluid. With electric heating only, the speed at which this fluid is heated to the desired temperature is limited by the power of the heater, which in turn may be limited by available electric current from the vehicle. However, when a PCM is present, a substantial amount of thermal energy is available at a constant temperature until the PCM has completely changed phase. Therefore, a lower rate of electric heating may be provided to a heating chamber when washer fluid is not being pumped, and a portion of this energy may be stored in the PCM so that it can be quickly extracted when needed. In some embodiments, a specific PCM can be selected to limit the upper temperature of the washer fluid. For example, the upper limit can be between about 50-65° C. As heat is applied to the PCM, the temperature of the fluid in the holding chamber will rise until it reaches the phase change temperature of the PCM. At that temperature, the addition of thermal energy does not raise the temperature, but rather drives the PCM's phase transition (for example, from solid to liquid phase). In this manner, heating via a PCM may be used as protection for over-heating the fluid. Moreover, the time in which the PCM may heat fluid is limited only by the heat transfer properties internal to the system, which may enable much faster heating than with electric heating only and/or may allow the system to use a lower peak electric current.

[0192] In some embodiments, heating chambers are configured to enable the delivery of forced air. For example, in some embodiments a heating chamber can include (i) a fluid inlet port for receiving fluid into the heating chamber, (ii) an air inlet port for receiving airflow into the heating chamber or a separate chamber, and (iii) one or more outlet ports for connecting the air flow and fluid flow to a nozzle. In some such embodiments, the forced air pathway connects with the fluid pathway after the heating chamber such that airflow does not disrupt the contents of the heating chamber, but forces fluid from the outlet port and the nozzle such that air is emitted from the nozzle (e.g., onto a vehicle component to be cleaned). In other embodiments, the forced air pathway connects with the fluid pathway within the heating chamber such that airflow forces fluid from the heating chamber through the nozzle before air flows from the nozzle onto the perception surface to be cleaned. Following the delivery of fluid and air, a fluid pump can refill the heating chamber with washer fluid.

[0193] In some embodiments, forced air can be delivered to evacuate fluid tubing to, for example, inhibit of even prevent fluid from freezing within the tubing. For example, a fluid heating and forced airflow device can include a channel including a fluid valve which regulates fluid flow into the channel, a fluid lumen carrying fluid to a heating chamber, an air valve which regulates air flow into the channel, an air lumen carrying air to a point where it joins the fluid outflow of the heating chamber, and a check valve configured to prevent fluid flow into the air lumen. When fluid delivery is desired, the fluid valve can be opened, and a fluid pump can push fluid through the fluid lumen, the heating chamber, and a nozzle configured to receive the fluid and air outflow and direct it against a vehicle component. When air delivery is desired, the fluid pump can be turned off, the fluid valve can be closed, and the air valve can be opened to allow airflow to eject fluid from a short span of

tubing between the heating chamber and the nozzle before spraying air on the perception surface. When evacuation of the system is desired for freeze protection, the air valve can be opened to allow air flow to eject liquid from the span of tubing between the heating chamber and the nozzle, and then the fluid valve can be opened to allow the forced air to push fluid out of the heating chamber and out of fluid lumen back into a fluid reservoir. When the system is restarted, the fluid pump can refill the fluid lumen and heating chamber with fluid.

[0194] In some embodiments, a heating chamber is configured to enable self-pumping. For example, the heating chamber can include (i) a fluid inlet port controlled by a one-way check valve that only allows fluid flow from the fluid inlet port into the heating chamber and (ii) a fluid outlet port controlled by a variable (e.g., solenoid) valve. Washer fluid can be heated within the heating chamber to a temperature above the boiling point of methanol, causing a rapid rise in the pressure within the heating chamber. When methanol boils, its vapor phase accumulates at the top of the heating chamber, while washer fluid exits towards the solenoid valve and a nozzle from the bottom of the heating chamber. When the solenoid valve opens, the expanding gas forcibly ejects the fluid through the nozzle. When the solenoid valve is closed, the remaining fluid in the chamber will cool, creating a vacuum, pulling fluid from the reservoir back into the chamber.

[0195] FIGS. **29-36** are cross-sectional views more specifically illustrating various embodiments of fluid holding, fluid heating, and/or forced airflow devices configured in accordance with embodiments of the present technology. The detailed description of each embodiment focuses mainly on those components that are new/different as compared to other embodiments. However, one skilled in the art will appreciate that the various embodiments can (i) include the same or generally similar features (e.g., components, configurations, etc.), (ii) operate the same or generally similarly, and/or (iii) that the various embodiments can be combined. Further, one skilled in the art will appreciate that the various embodiments discussed with reference to FIGS. **29-36** can be combined/incorporated with each other and/or the embodiments discussed with reference to FIGS. **2-28**.

[0196] FIG. **29** is a cross-sectional view of a fluid holding device **2980** configured in accordance with an embodiment of the present technology. In the illustrated embodiment, the fluid holding device **2980** includes a fluid holding chamber **2982** connected to an inlet port **2981**, a return/recirculation port **2983**, and an outlet port **2985**. The fluid holding device **2980** further includes a pressure-actuated check valve (e.g., a pre-nozzle check valve) comprising a spring **2992** and a seal **2994**. The seal **2994** is configured to block/seal a check valve aperture **2986** to prevent fluid from flowing from the holding chamber **2982** through the outlet port **2985**. More specifically, the check valve aperture **2986** remains blocked when the pressure within the holding chamber **2982** is too low to compress the spring **2992** and depress the seal **2994**. However, when the pressure in the holding chamber **2982** exceeds the cracking pressure, the spring **2992** compresses and depresses the seal **2994**—unsealing the check valve aperture **2986** and allowing fluid (e.g., washer fluid) to exit via the outlet port **2985** and to flow to, for example, a delivery nozzle.

[0197] In one aspect of the embodiment illustrated in FIG. **29**, the fluid holding device **2980** includes an integrated check-valve. Therefore, in some embodiments the fluid holding device **2980** comprises a single device that could be incorporated into any of the embodiments described in detail above to integrate a holding chamber into a pre-nozzle check valve. As one representative example, the fluid holding device **2980** could be incorporated into the system **1110** described in detail with reference to FIG. **1110** to replace any pair of the holding chambers **1116** and the pre-nozzle check valves **1121**.

[0198] FIG. **30** is a cross-sectional view of a fluid heating device **3080** configured in accordance with an embodiment of the present technology. In the illustrated embodiment, the device **3080** includes a fluid holding chamber **3082** connected to an inlet port **3081** and an outlet port **3085**. Fluid (e.g., washer fluid) can enter the holding chamber **3082** via the inlet port **3081** and can exit the holding chamber **3082** via the outlet port **3085**. In some embodiments, a one-way check valve **3084** is positioned within the holding chamber **3082** and configured to prevent fluid back-flow from the outlet port **3085** into the holding chamber **3082**. In the illustrated embodiment, the device **3080** includes an electric heating element **3094** configured to heat a fluid in the holding chamber **3082**. The electric heating element **3094** can be connected to a controller and/or a power bus by electrical leads **3093**. In some embodiments, the leads **3093** can be configured to transmit signals (e.g., temperature signals) sensed from within the holding chamber **3082** (e.g., via one or more sensors; not shown). The device **3080** can also include thermal insulation **3095** configured to limit heat loss from the fluid to the environment.

[0199] In some embodiments, the device **3080** can be positioned proximate to a washer fluid nozzle in a cleaning system. Thus, in one aspect of the present technology, the device **3080** is configured to provide localized heating and holding of heated fluids proximate to delivery nozzles or other components for cleaning vehicle components.

[0200] FIG. **31** is a cross-sectional view of a fluid heating device **3180** configured in accordance with another embodiment of the present technology. In the illustrated embodiment, the device **3180** includes a fluid holding chamber **3182** connected to an inlet port **3181** and an outlet port **3185**. Fluid (e.g., washer fluid) can enter the holding chamber **3182** via the inlet port **3181** and can exit the holding chamber **3182** via the outlet port **3185**. A one-way check valve **3184** is positioned within the holding chamber **3182** and configured to prevent fluid back-flow from the outlet port **3185** into the holding chamber **3182**.

[0201] In the illustrated embodiment, the device **3180** further includes a phase change material chamber **3196** positioned within the holding chamber **3182** or otherwise thermally coupled to the holding chamber **3082**. An electric heating element **3194** is connected to a controller and/or a power bus by electrical leads **3193** and is configured to heat a phase change material in the phase change material chamber **3196** to thereby heat the fluid in the holding chamber **3182** to, for example, a target temperature range. In some embodiments, the phase change material is selected such that it changes phase within the target temperature range. For example, the target temperature of the fluid in the holding chamber **3182** may be between about 45-55° C. and the phase change material can be selected to shift phases at about 53° C. In some embodiments, the electric heating element **3194** is coupled to a controller configured to provide trickle heating to maintain the temperature of both the

washer fluid and the phase change material at 55° C., maintaining the phase change material in its elevated state. When the fluid in the holding chamber **3182** is expelled via the outlet port **3185** (e.g., to be sprayed onto a vehicle component), it can be replaced with cold fluid via the inlet port **3181**. The electric heating element **3194** can transfer heat to the cold fluid via the phase change material to thereby accelerate re-heating of the holding chamber **3182** and the fluid therein. In some embodiments, the device **3180** can also include thermal insulation **3195** (e.g., an outer blanket of insulation) configured to limit heat loss from the holding chamber **3182** and the phase change material chamber **3196** to the environment.

[0202] In some embodiments, the holding chamber **3182** is configured to hold (e.g., has a volume of about) about 50 milliliters of fluid and the phase change material chamber **3196** is configured to hold about 60 milliliters of an organic phase change material that melts at 63° C. with a latent heat of 150 kilojoules per kilogram and a specific gravity of 0.91. In such embodiments, the thermal energy released by the phase change material as it solidifies is 8.2 kilojoules—enough heat to raise the temperature of 20 milliliters of washer fluid by 120° C. (or twice by 60° C.). In this manner, an electric vehicle including the device **3180** could pre-heat the phase change material and the initial volume of washer fluid in the holding chamber **3182** while charging, and still retain enough energy to deliver 60 milliliters of heated fluid (e.g., in six pulses of 10 milliliters each). The vehicle would only expend energy on maintaining the temperature of the holding chamber **3182** thereafter.

[0203] FIG. **32** is a cross-sectional view of a fluid heating and forced airflow device **3280** configured in accordance with an embodiment of the present technology. In the illustrated embodiment, the device **3280** includes a fluid holding chamber **3282** connected to a fluid inlet port **3281** and a fluid outlet port **3285**. Fluid (e.g., washer fluid) can enter the holding chamber **3282** via the fluid inlet port **3281** and can exit the holding chamber **3282** via the fluid outlet port **3285**. A one-way check valve **3284** is positioned within the holding chamber **3282** and configured to prevent fluid back-flow from the fluid outlet port **3285** into the holding chamber **3282**. An electric heating element **3294** is configured to heat the fluid in the holding chamber **3282**, and thermal insulation **3295** is configured to limit heat loss from the holding chamber **3282** to the environment. In the illustrated embodiment, the device **3280** further includes a forced air inlet **3297** and a forced air outlet **3299** separated by a forced air one-way valve **3298**. The forced air outlet **3299** can join the fluid outlet port **3285** (e.g., at a T-junction) for outlet and delivery to a nearby vehicle component.

[0204] FIG. **33** is a cross-sectional view of a fluid heating and forced airflow device **3380** configured in accordance with another embodiment of the present technology. In the illustrated embodiment, the device **3380** includes a fluid holding chamber **3382** connected to a fluid inlet port **3381** and an air holding chamber **3302** connected to an air inlet port **3397**. The fluid holding chamber **3382** and the air holding chamber **3302** are connected to a common plenum **3301** via a first one-way check valve **3384** and a second one-way check valve **3398**, respectively. The plenum **3301** is, in turn, connected to an outlet port **3306** configured to deliver fluid and air to a nearby perception sensor. An electric heating element **3394** is configured to heat the fluid in the fluid holding chamber **3382**, and thermal insulation **3395** is configured to limit heat loss from the fluid holding chamber **3382** to the environment. In some embodiments, washer fluid may be provided to outlet port **3306** (e.g., to a nozzle) for cleaning when fluid is pumped, and air may be provided to the outlet port **3306** for surface drying when air flows. Air and washer fluid may be transported to the fluid inlet port **3381** and the air inlet port **3397** by two separate tubes or within two lumens in a dual-lumen tube.

[0205] FIG. **34** is a partially-schematic, cross-sectional view of a fluid heating and forced airflow device **3480** configured in accordance with another embodiment of the present technology. In the illustrated embodiment, the device **3480** includes a holding chamber **3403** connected to a fluid inlet port **3481**, an air inlet port **3497**, a return/recirculation port **3483**, and a common air and fluid outlet port **3406**. The holding chamber **3403** is connected to (i) the outlet port **3406** via a first one-way check valve **3407** and the (ii) air inlet port **3497** via a second one-way check valve **3498**. The outlet port **3406** is configured to deliver fluid and/or air to a nearby vehicle component to clean and/or dry the vehicle component. An electric heating element **3494** is configured to heat fluid and/or air in the holding chamber **3403**, and thermal insulation **3495** is configured to limit heat loss from the holding chamber **3403** to the environment.

[0206] In the illustrated embodiment, a fluid pump **3404** is connected to the fluid inlet port **3481** via a fluid distribution channel and a fluid distribution valve **3408** and is configured to selectively route fluid from a fluid reservoir **3402** to the holding chamber **3403**. An air source **3452** is connected to the air inlet port **3497** via an air distribution channel and air distribution valve **3460** and is configured to selectively route air to the holding chamber **3403**. The second one-way check valve **3498** can prevent fluid from flowing back into the air inlet port **3497** from the holding chamber **3403**. The fluid reservoir **3402** is connected to the return port **3483** of the holding chamber **3403** via a return channel and return valve **3420** which can be selectively opened/closed to allow fluid and/or air to return to the reservoir **3402**.

[0207] When fluid delivery is desired, the pump **3404** pumps fluid into the holding chamber **3403** while the return valve **3420** remains closed, thereby increasing the pressure within the holding chamber **3403** above the cracking pressure of the first one-way valve **3407**. This allows the fluid to flow through the outlet port **3406** to a nozzle or other delivery element. If forced air delivery is subsequently desired, the air source **3452** can pump/force air into the holding chamber **3403** to expel the fluid in the holding chamber **3403** through the first one-way valve **3407** and the outlet port **3406**. When the volume of fluid in the holding chamber **3403** has been reduced or depleted, air may then flow out the first one-way valve **3407** and the outlet port **3406** to the nozzle. To refill the holding chamber **3403** with fluid, fluid is pumped into the holding chamber **3403** while the return valve **3420** is open. This allows the holding chamber **3403** to fill with fluid and forces air and fluid through the return port **3483**. In some embodiments, if freeze prevention is desired, air may be forced into the holding chamber **3403** while the return valve **3420** is open to evacuate any fluid in the holding chamber **3403**.

[0208] FIG. **35** is a partially-schematic, cross-sectional view of a fluid heating and forced airflow device **3580** configured in accordance with another embodiment of the present technology. In the illustrated embodiment, the device **3580** includes (i) a fluid holding chamber **3582**

connected to a fluid inlet port **3581** via first one-way check valve **3512** and (ii) an air holding chamber **3509** connected to an air inlet port **3597** via a second one-way valve **3598**. The fluid holding chamber **3582** and the air holding chamber **3509** are connected to a common outlet port **3506** via a selectable valve **3513** (e.g., a solenoid valve) and a third one-way check valve **3514**, respectively. An electric heating element **3594** is configured to heat the fluid in the fluid holding chamber **3582**, and thermal insulation **3595** is configured to limit heat loss from the fluid holding chamber **3582** and/or the air holding chamber **3509** to the environment.

[0209] In the illustrated embodiment, a movable piston **3510** separates the fluid holding chamber **3582** from the air holding chamber **3509** and is coupled to a spring **3511**. Under normal conditions, the selectable valve **3513** is closed, and the fluid pump **3504** maintains pressure in the washer fluid holding chamber **3582**. This pressure drives the piston **3510** toward the air inlet port **3597** (e.g., toward the left of the page in FIG. **35**), thereby compressing the spring **3511**. When fluid delivery is desired, the selectable valve **3513** is opened and heated fluid exits through the outlet port **3506**. This reduces the pressure within the fluid holding chamber **3582** and permits the piston **3510** to be driven toward the fluid inlet port **3581** (e.g., toward the right of the page in FIG. **35**) by the spring **3511**. Movement of the piston **3510** toward the fluid inlet port **3581** draws air into the air holding chamber **3509**. Once a pulse of fluid is ejected through the outlet port **3506**, the selectable valve **3513** closes—increasing the pressure in the fluid holding chamber **3582** due to the pressure flow of fluid provided by the pump **3504**. This pressure again drives the piston **3510** toward the air inlet port **3597**, which drives air from the air holding chamber **3509** and through the outlet port **3506**.

[0210] Therefore, in one aspect of the present technology, the device **3580** is configured to deliver both heated fluid and forced air using only the pressure from the fluid pump **3504**. That is, forced air delivery is achieved without the need for a pressurized air source.

[0211] FIG. **36** is a partially-schematic, cross-sectional view of a fluid heating and forced airflow device **3680** configured in accordance with another embodiment of the present technology. In the illustrated embodiment, the device **3680** includes (i) a fluid holding chamber **3682** connected to a fluid inlet port **3681** via first one-way check valve **3612** and (ii) an air holding chamber **3609** connected to an air inlet port **3697** via a second one-way valve **3698**. The fluid holding chamber **3682** and the air holding chamber **3609** are connected to a common outlet port **3606** via a third one-way check valve **3613** and a fourth one-way check valve **3614**, respectively. An electric heating element **3694** is configured to heat the fluid in the fluid holding chamber **3682**, and thermal insulation **3695** is configured to limit heat loss from the fluid holding chamber **3682** and/or the air holding chamber **3609** to the environment. A movable piston **3610** separates the fluid holding chamber **3682** from the air holding chamber **3609** and is coupled to a spring **3611**.

[0212] In the illustrated embodiment, the air inlet port **3697** is connected to an air source **3652** via a selectable valve (e.g., a solenoid valve) **3660**. The fluid inlet port **3681** is connected to a fluid reservoir **3602**. Under normal conditions, the fluid holding chamber **3682** is filled with fluid and (ii) the air holding chamber **3609** and the fluid holding chamber **3682** are at near-ambient pressure such that the spring **3611** is extended and the piston **3610** is extended (e.g., in a most-extend position) toward the air inlet port **3697** (e.g., toward the left of the page in FIG. **36**). When fluid delivery is desired, the selectable valve **3660** is opened and air flows into the air holding chamber **3609**. This increases the pressure within the air holding chamber **3609** and drives the piston toward the fluid inlet port **3681** (e.g., toward the right of the page in FIG. **36**). Movement of the piston **3610** toward the fluid inlet port **3681** increases the pressure in the fluid holding chamber **3682** until the cracking pressure of the third one-way check valve **3613** is exceeded and fluid is expelled through the outlet port **3606** to a nozzle or other delivery element. The piston **3610** eventually stops moving as the spring **3611** compresses until the air pressure in the air holding chamber **3609** exceeds the cracking pressure of the fourth one-way check valve **3614**, which drives air from the air holding chamber **3609** through the fourth one-way check valve **3614** and through the outlet port **3606** to the nozzle or other delivery element. When the selectable valve **3660** is closed, the pressure in the air holding chamber **3609** returns to ambient, and the spring **3611** extends and drives the piston **3610** toward the air inlet port **3697**. This movement of the piston **3610** draws fluid from the reservoir **3602** into the fluid holding chamber **3682**.

[0213] Therefore, in one aspect of the present technology, the device **3680** is configured to deliver both heated fluid and forced air using only the pressure from the air source **3652**. That is, heated fluid delivery is achieved without the need for a fluid pump.

IX. Selected Embodiments of Delivery/Return Channels

[0214] Because washer fluid and forced air distribution systems may be designed to deliver air and/or fluid to twenty or more vehicle components (e.g., surfaces, sensors, etc.), the management of tubing within a vehicle may become quite complex. In some embodiments, the routing, mounting, and tracing may be significantly easier for a co-extruded bundle of tubes than a collection of individual tubes. Similarly, because recirculating washer fluid systems bring washer fluid to and back from component locations around the vehicle, and forced air systems bring air to the same points, using co-extruded multi-lumen tubing may greatly simplify such systems.

[0215] Accordingly, FIG. **37** includes several cross-sectional views of multi-lumen tubing for fluid and/or air delivery and/or recirculation configured in accordance with embodiments of the present technology. In some embodiments, a selected fluid delivery channel and the associated return channel can be combined in a single tube **3702** having two equally-sized lumen. In some embodiments of systems including forced air delivery, fluid delivery, and fluid recirculation the various delivery and return channels can be combined in a tube **3706** having three equal sized lumens in a linear (e.g. planar) arrangement or a tube **3708** having three equally sized lumens in a bunched arrangement. In some embodiments, the washer fluid and/or of forced air can flow at significantly different flow velocities. Accordingly, the various delivery and return channels can be combined in a tube **3710** having three unequally-sized lumens in a linear arrangement or a tube **3712** having three unequally sized lumens in a bunched arrangement. In yet other embodiments, a tube **3704** having two unequally sized lumens can be used to, for example, combine fluid delivery and return

channels. As one of ordinary skill in the art will appreciate, many other configurations of multi-lumen tubing are within the scope of the present technology.

[0216] In some embodiments, the various tube lumens can be used to carry wires instead of or in addition to fluid and air. Such wires can include, for example, any wires necessary to sense, control, and/or operate localized heating elements within distributed heating chambers.

X. Selected Embodiments of Fluid Heating

[0217] Referring again to FIG. **1**, in some embodiments the cleaning system **110** is configured to heat fluid such that it has a temperature of between about 35-60° C. when it is held within one or more holding and/or heating chambers positioned near corresponding vehicle components (e.g., corresponding ones of the sensors **108** and/or perception surfaces **109**). In some embodiments, a target temperature within each chamber may be different based on, for example, a surface to be cleaned, a vehicle operating state, ambient weather conditions, etc. For example, the cleaning system **110** may have one or more preset temperature target modes, and each channel (corresponding to a chamber) may be assigned one of these preset modes which determines the temperature to which it will heat fluid held in its heating chamber. For example, the cleaning system **110** can have a high temperature mode set to 60° C., a medium mode set to 45° C., a low temperature mode set to 30° C., and/or an ambient temperature mode in which no heating is provided. The cleaning system **110** can determine which mode to assign to each channel through the use of inputs, such as inputs from ambient temperature sensors or information conveyed by a vehicle control system.

[0218] In some embodiments, the vehicle **100** is an electric vehicle having one or more batteries and the cleaning system **110** is configured to pre-heat fluid during charging of the batteries. That is, initial fluid heating may be performed while the vehicle **100** is charging to minimize energy consumption from the batteries of the vehicle **100** during operation.

[0219] In some embodiments, the cleaning system **110** is configured heat fluid within one or more heating chambers using closed-loop temperature control of electric resistance heating elements. Accordingly, one or more electric resistance heating elements and one or more temperature sensors can be located within each heating chamber. The temperature in the heating chamber can be measured on one or more heating elements, in the fluid in the heating chamber, or elsewhere in the heating chamber. In some embodiments, bang-bang heating control is done wherein power to the one or more heating elements is turned on when the measured temperature is below a first threshold value and is turned off when it is above a second threshold value. In other embodiments, power provided to the one or more heating elements is reduced to reduce the heating rate. For example, power can be reduced via pulse width modulation of the electrical circuit of each heating element to reduce the average voltage provided to the one or more heating elements. In yet other embodiments, heating power is reduced by low frequency switching of the power to the one or more heating elements, such as turning the heaters on for several seconds and then off for several seconds. In some embodiments, heating power is increased or reduced based on the difference between the measured temperature and a target temperature.

[0220] In some embodiments, the cleaning system **110** is configured to heat fluid within one or more heating chambers using uncontrolled positive temperature coefficient fluid heating within the heating chambers. For example, the heating can be done by providing electric power to positive temperature coefficient heating elements positioned at and/or within the heating chambers. The cleaning system **110** can provide a constant voltage to the positive temperature coefficient heating elements or a modulated voltage to, for example, control the heating rate or the equilibrium temperature of the heating elements.

[0221] In some embodiments, the cleaning system **110** is configured to heat fluid within one or more heating chambers using switched positive temperature coefficient fluid heating within the heating chambers. For example, the heating can be done by independently controlling the electric power to positive temperature coefficient heating elements positioned at and/or within the heating chambers. In other embodiments, the heating chambers can be grouped, and the electric power can be modulated to each group of associated heating elements. Each heating chamber can contain one or more one positive temperature coefficient heating elements that can have the same or different power ratings, the same or different equilibrium temperatures, and/or can be controlled together or independently.

[0222] FIG. **38** is a graph of fluid temperature versus time for the heating of washer fluid within a heating chamber (e.g., by a cleaning system, such as the cleaning system **110** of FIG. **1**) in accordance with embodiments of the present technology. In the illustrated embodiment, the fluid heating system provides an initial rapid fluid heating **3806** curve such that the washer fluid temperature rises quickly to a lower limit **3802** of a target temperature range. This can provide the washer fluid with enough thermal energy to reduce its viscosity, increase its flow rate, and improve its cleaning ability. Once the lower limit **2802** of the target temperature range is reached, the fluid heating system may manage the expenditure of power in different ways to reduce power draw from the vehicle. If power is readily available, heating may continue as before, following the curve **3808** denoting continued rapid fluid heating. If cumulative power management is needed, the fluid heating system may reduce the power provided to the heater in the heating chamber, resulting in a reduced power fluid heating curve **3810**. In extreme cases, power may be greatly reduced, as in a curve **3812** denoting power-limited fluid heating. In some embodiments, heating may be turned off, yielding pauses in heating (and associated temperature decline)—denoted by a first paused heating period **3814** and a second paused heating period **3818**. The fluid heating system may intermittently have power available, allowing the system to continue heating as shown by a resumed power-limited heating curve **3816**, and a second resumed power-limited heating curve **3820** until an upper limit **3804** of the target temperature range is achieved. Once the upper limit **3084** is reached, heating is reduced, stopped, or the temperature is thermostatically controlled at a minimal heating rate required to offset thermal losses to the environment.

XI. Selected Embodiments of Pulsed Fluid Delivery

[0223] Referring again to FIG. **1**, in some embodiments the cleaning system **110** is configured to deliver fluid to clean vehicle components in pulses as one or more fluid

delivery valves are opened and subsequently closed (while a fluid pump operates) to deliver the fluid along selected channels to corresponding ones of the fluid delivery components **114**. In some embodiments, the parameters which control the pulse may be preset and correspond to the vehicle component to be cleaned such that each vehicle component (e.g., a surface thereof) receives an appropriate amount of fluid. In some embodiments, each vehicle component to be cleaned has a standard set of parameters which control the delivery of a fluid pulse. These parameters may be added to, subtracted from, multiplied, or divided based on changes to input parameters which include an ambient temperature, a temperature of the fluid, a detected occlusion severity, a mode of vehicle operation, a location of the vehicle **100**, and/or other factors. In some embodiments, standard pulses for warmed fluid delivery are set to be between 0.5-5 milliliters per square centimeter of surface area to be cleaned.

[0224] In some embodiments, each fluid pulse is controlled by actuating the pump and the delivery valves for a preset time. The preset time may be different for each vehicle component to be cleaned and may change based on other sensed parameters. For example, longer duration pulses may occur when ambient temperatures are lower or detected occlusions are severe. In some embodiments, the delivery of each fluid pulse may be controlled to deliver a specified volume of fluid. This volume may be different for each vehicle component to be cleaned and may change based on other sensed parameters. For example, larger volume pulses may occur when ambient temperatures are lower, and the viscosity of the delivered fluid is greater (e.g., resulting in lower flow rates for a given pump pressure). As another example, pulse volumes may increase when difficult-to-clean occlusions are sensed, perhaps such as insect splatter, or may be decreased when minor occlusions like surface dust are detected.

XII. Selected Embodiments of Cleaning System Control

[0225] Referring again to FIG. **1**, in some embodiments an electronic control system (e.g., the controller **106** of the vehicle delivery system **104** and/or the controller **112** of the cleaning system **112**) includes a microprocessor configured to control/actuate the components of the cleaning system **110**, such as one or more fluid pumps, valves, electric heaters, etc. The electronic control system can be separate from the vehicle control system **104** or can communicate with the vehicle control system to receive signals, such as operating states of the vehicle **100**, ambient temperatures, power limits, sensors to be cleaned, error signals (such as empty washer fluid reservoir), etc. In some embodiments, the vehicle control system **104** directly controls the cleaning system **110**.

[0226] When the vehicle **100** is an electric vehicle, it is often important to manage power and energy draw from the batteries of the vehicle **100**. The vehicle **100** can include energy management controls which prioritize and de-prioritize expenditure of stored electric energy on vehicle systems. When the cleaning system **110** uses electric energy to heat washer fluid, the vehicle **100** may command a state in the cleaning system **110** which limits electric power usage. In some embodiments, the vehicle control system **104** communicates an operating state to the cleaning system **110**, and the cleaning system **110** modifies the fluid heating temperatures accordingly.

[0227] In some embodiments, the vehicle control system **104** communicates an operating state to the cleaning system **110**, and the cleaning system **110** manages the cumulative consumption of electricity from the cleaning system **110** to remain within a corresponding preset range. In other embodiments, the vehicle control system **104** communicates a numerical value for a preset power limit to the cleaning system **110**, and the cleaning system **110** allocates the cumulative power consumption of the system to stay within this limit.

[0228] In some embodiments, the cleaning system **110** includes one or more energy storage devices in which in which electrical energy may be stored over a period and released for fluid heating and valve operation over a shorter period. The energy storage devices can be batteries, capacitors, and/or other devices. The energy storage devices can be located proximate to one or more fluid heating chambers and the heating elements contained therein. In such embodiments, small wires may carry low electric current over longer spans to the energy storage devices, and larger wires can carry the higher currents from the energy storage devices to the heating elements over a shorter distance. In some embodiments, the energy storage devices are designed to hold enough energy to heat the washer fluid within a heating chamber by about 50° C., can store between 1-10 kilojoules of electrical energy, and/or can release their stored energy in less than 30 seconds.

XIII. Exemplary System

[0229] Referring again to FIG. **1**, in some embodiments, the cleaning system **110** includes 20 parallel fluid delivery channels, 15 of which service small, 5 square centimeter camera sensor surfaces, and 5 of which service larger, 25 square centimeter LIDAR sensor surfaces. In some embodiments, maintaining the cleanliness of the LIDAR sensor surfaces can be relatively more important than maintaining the cleanliness of the camera surfaces. When a camera surface occlusion is detected, delivery of a 10-milliliter bolus of heated fluid is specified. In line, just before nozzles configured to clean the camera surfaces, each channel can have a 20-milliliter heating chamber including a 20-watt electric heater capable of heating the volume from 0° C. to 30° C. in less than three minutes, and to 55° C. in less than ten minutes. To clean the LIDAR surfaces, a 50-milliliter bolus of heated fluid is specified. In line, just before the LIDAR surfaces, each channel has a 100-milliliter heating chamber including a 100-watt electric heater.

[0230] Accordingly, operating all 20 channels at maximum power can requires 800 watts. This power can be available from the vehicle **100** while the vehicle **100** is charging (in the case of an electric vehicle), or for a short period of up to five minutes after start-up. After the start-up period, the cleaning system **110** can have a maximum allowable power draw of 130 watts. The system controller selectively applies this power to the 20 fluid holding chambers to compensate for their heat loss and to maintain their temperatures, or to reheat fluid in a chamber following fluid delivery.

[0231] The cumulative heat loss from the holding chambers—even in very cold conditions—can total less than approximately 25 watts. Reheating a large holding chamber

following delivery of a pulse of fluid may draw as much as approximately 100 watts if rapid reheating is allowed, or less, if the heating rate is throttled to limit system power. Cumulatively, the cleaning system **110** may see short peaks of 125-watt power draw but, over time, the average power draw is expected to be much closer to 25 watts. When ambient temperatures are warmer, or when the target washer fluid temperature is reduced, this power draw can be reduced considerably.

XIV. Conclusion

[0232] The above Detailed Description of examples of the present technology is not intended to be exhaustive or to limit the present technology to the precise form disclosed above. While specific examples for the present technology are described above for illustrative purposes, various equivalent modifications are possible within the scope of the present technology, as those skilled in the relevant art will recognize. For example, while processes or blocks are presented in a given order, alternative implementations may perform routines having steps, or employ systems having blocks, in a different order, and some processes or blocks may be deleted, moved, added, subdivided, combined, and/or modified to provide alternative or sub-combinations. Each of these processes or blocks may be implemented in a variety of different ways. Also, while processes or blocks are at times shown as being performed in series, these processes or blocks may instead be performed or implemented in parallel, or may be performed at different times. Further, any specific numbers noted herein are only examples; alternative implementations may employ differing values or ranges.

[0233] These and other changes can be made to the present technology in light of the above Detailed Description. While the Detailed Description describes certain examples of the present technology as well as the best mode contemplated, the present technology can be practiced in many ways, no matter how detailed the above description appears in text. Details of the system may vary considerably in its specific implementation, while still being encompassed by the technology disclosed herein. As noted above, particular terminology used when describing certain features or aspects of the present technology should not be taken to imply that the terminology is being redefined herein to be restricted to any specific characteristics, features, or aspects of the present technology with which that terminology is associated. Accordingly, the present technology is not limited, except as by the appended claims. In general, the terms used in the following claims should not be construed to limit the present technology to the specific examples disclosed in the specification, unless the above Detailed Description section explicitly defines such terms.

[0234] Although certain aspects of the present technology are presented below in certain claim forms, the applicant contemplates the various aspects of the present technology in any number of claim forms. Accordingly, the applicant reserves the right to pursue additional claims after filing this application to pursue such additional claim forms, in either this application or in a continuing application.

1. A system for cleaning a perception component of a vehicle, the system comprising:

a manifold configured to receive a flow of fluid and including a distribution valve, wherein the distribution valve is movable between open and closed positions;

a delivery conduit fluidly connected to the manifold via the distribution valve;

a delivery component fluidly connected to the delivery conduit and configured to deliver the fluid to the perception component of the vehicle; and

a controller configured to—

receive a signal from the perception component indicating that the perception component has an occlusion; and

based on the signal indicating that the perception component has an occlusion, send a control signal to the manifold to move the distribution valve to the open position to route the flow of the fluid through the delivery conduit and to the delivery component for delivery to the fluid perception component to clear the occlusion.

2. The system of claim **1** wherein the distribution valve is an electrically-actuated solenoid valve configured to receive the control signal from the controller.

3. The system of claim **1** wherein the delivery component is a nozzle configured to spray the fluid against the perception component to clear the occlusion.

4. The system of claim **1**, further comprising a fluid heater fluidly connected to the manifold.

5. The system of claim **4** wherein the manifold includes a three-way valve that is actuatable to selectively route the flow of the fluid (a) to the heater for heating or (b) to bypass the heater and remain unheated.

6. The system of claim **4** wherein the heater is an electric heater, a parasitic heater, or both an electric heater and a parasitic heater.

7. The system of claim **1**, further comprising a holding chamber fluidly connected to the delivery conduit between the manifold and the delivery component, wherein the holding chamber is configured to hold a selected volume of the fluid proximate to the delivery component.

8. The system of claim **7** wherein a connection portion of the delivery conduit extends between the holding chamber and the delivery component, wherein the delivery conduit is sized to contain a volume of fluid corresponding to approximately ½ of the volume of fluid dispensed in a pulse of the fluid delivered to the perception component.

9. The system of claim **7** wherein the holding chamber includes an electric heating element configured to heat the volume of the fluid held therein.

10. The system of claim **1** wherein the fluid is washer liquid, and further comprising:

a reservoir configured to hold at least a portion of the washer liquid; and

a pump fluidly connected to the reservoir and configured to pump the washer liquid from the reservoir to the manifold and through the delivery conduit to the delivery component.

11. The system of claim **1** wherein the fluid is air.

12. A method for cleaning perception components of a vehicle, the method comprising:

receiving, from a perception component of the vehicle, a signal indicating that the perception component has an occlusion; and

based on the signal indicating that the perception component has an occlusion, (a) opening a valve of a manifold to fluidly connect a delivery conduit to the manifold and (b) actuating a pump to flow a fluid through the manifold and along the delivery conduit to

a fluid delivery component configured to deliver the fluid to the perception component to clear the occlusion.

13. The method of claim **12** wherein the perception component is a first perception component, wherein the valve is a first valve, wherein the delivery conduit is a first delivery conduit, and wherein the method further comprises:

receiving, from a second perception component of the vehicle, a signal indicating that the second perception component has an occlusion; and

based on the signal indicating that the second perception component has an occlusion, (a) opening a second valve of the manifold to fluidly connect a second delivery conduit to the manifold and (b) actuating the pump to flow the fluid through the manifold and along the second delivery conduit to a delivery component configured to deliver the fluid to the second perception component to clear the occlusion.

14. The method of claim **13** wherein actuating the pump to flow the fluid through the manifold and along the first delivery conduit and the second delivery conduit includes flowing the fluid along the first delivery conduit and the second delivery conduit simultaneously.

15. The method of claim **12** wherein the method further comprises:

receiving, from the perception component, a signal indicating that the perception component no longer has the occlusion; and

based on the signal indicating that the perception component no longer has the occlusion, closing the valve to fluidly disconnect the delivery conduit from the manifold to stop the delivery of the fluid to the perception component.

16. The method of claim **12** wherein the method further comprises heating the fluid before flowing the fluid along the delivery conduit.

17. The method of claim **16** wherein heating the fluid includes (a) actuating the pump to flow the fluid through the manifold and (b) actuating a three-way valve of the manifold to route at least a portion of the flow of the fluid through a heater.

18. A system for cleaning perception components of a vehicle, the system comprising:

a manifold including a plurality of valves movable between open and closed positions, and wherein the manifold is configured to receive a flow of fluid;

a plurality of delivery conduits fluidly connected to the manifold via corresponding ones of the valves;

a plurality of nozzles fluidly connected to corresponding ones of the delivery conduits, wherein the nozzles are configured to spray the fluid on corresponding ones of the perception components of the vehicle; and

a controller configured to—

receive, from individual ones of the perception components, a signal relating to washing of the perception component; and

based on the signal relating to washing of the perception component is occluded, move the corresponding one of the valves to the open position to route the flow of the fluid along the corresponding one of the delivery conduits to the corresponding one of the nozzles to spray the fluid on the perception component to clean the perception component.

19. The system of claim **18** wherein the manifold is configured to be positioned proximate to an engine compartment of the vehicle.

20. The system of claim **18**, further comprising:

a parasitic heater fluidly connected to the manifold, wherein the parasitic heater is configured to heat the fluid via heat exchange with an engine of the vehicle;

an electric heater fluidly connected to the manifold;

wherein the manifold includes a first three-way valve that is actuatable to selectively route the flow of the fluid (a) to the parasitic heater for heating or (b) to bypass the parasitic heater; and

wherein the manifold includes a second three-way valve that is actuatable to selectively route the flow of the fluid (a) to the electric heater for heating or (b) to bypass the electric heater.

21. The system of claim **20** wherein the controller is further configured to, based on a condition of the engine of the vehicle, actuate either (a) the first three-way valve to route the flow of the fluid to the parasitic heater or (b) the second three-way valve to route the flow of the fluid to the electric heater.

* * * * *