C. T. HENDERSON.

CIRCUIT CONTROLLER.

APPLICATION FILED APR. 14, 1913.

1,178,584. Patented Apr. 11, 1916.

Fig. 1.

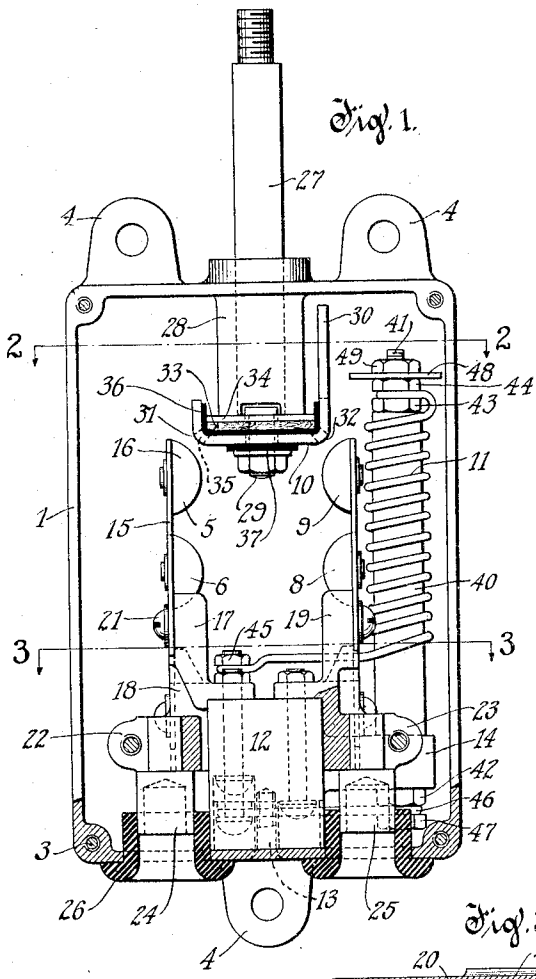

Fig. 2.

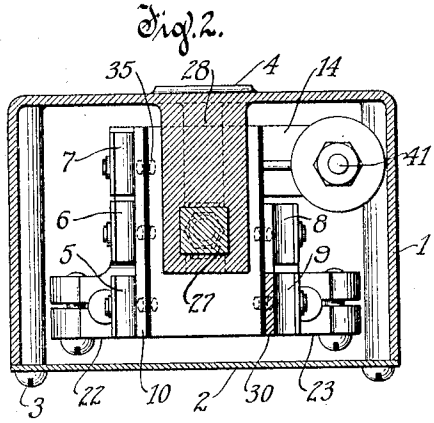

Fig. 3.

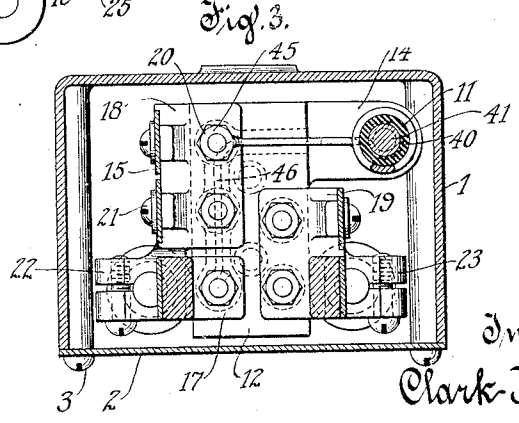

Witnesses-

J. L. Johnson

H. Watson

Inventor

Clark J. Henderson

By Edwin R. Stowell, Jr.

Attorney

THE COLUMBIA PLANOGRAPH CO., WASHINGTON, D. C.

UNITED STATES PATENT OFFICE.

CLARK T. HENDERSON, OF MILWAUKEE, WISCONSIN, ASSIGNOR TO THE CUTLER-HAMMER MFG. CO., OF MILWAUKEE, WISCONSIN, A CORPORATION OF WISCONSIN.

CIRCUIT-CONTROLLER.

1,178,584. Specification of Letters Patent. Patented Apr. 11, 1916.

Application filed April 14, 1913. Serial No. 760,984.

To all whom it may concern:

Be it known that I, CLARK T. HENDERSON, a citizen of the United States, residing at Milwaukee, in the county of Milwaukee and State of Wisconsin, have invented new and useful Improvements in Circuit-Controllers, of which the following is a full, clear, concise, and exact description, reference being had to the accompanying drawing, forming a part of this specification.

My invention relates to improvements in circuit controllers.

It is particularly adapted to be used as a power controller for an electric motor as exemplified in my co-pending application, Serial No. 760,985, filed Apr. 14, 1913, but may be used in various other relations and for numerous different purposes.

My invention has among its objects to provide a simple, compact and durable device for effecting circuit variations.

A further object is to provide a circuit controller having a resistance element carried thereby and adapted to be included in certain of the circuit connections established by said controller.

Other objects and advantages of my invention will hereinafter appear.

For the purpose of clearly and fully disclosing the nature and advantages of my invention I shall describe one embodiment thereof as illustrated in the accompanying drawing.

The several parts of the controller illustrated are mounted within and supported by a rectangular box 1 having a removable cover 2 suitably secured by screws 3. The box is also provided with ears 4 for attachment thereof to any suitable support.

The controller includes five stationary contacts, 5, 6, 7, 8 and 9, a movable bridging contact 10 and a resistance element 11.

The stationary contacts and the resistance elements are all mounted upon an insulating base 12 secured to one end of the box 1 by screws 13. The base 12 is substantially rectangular in shape and is provided on one side, and preferably adjacent to its rear edge, with an extension 14 for supporting the resistance element 11.

The contacts 5, 6 and 7 are mounted on one side of the base 12 while the contacts 8 and 9 are mounted upon the opposite side of the base and in front of the resistance element support. The contacts are arranged in two sets relative to the movable contact 10, said sets being arranged to be engaged by said movable contact successively. The set first engaged by the contact 10 includes the contacts 5 and 9 while the other set includes contacts 6, 7 and 8. All of the contacts are of the same construction and preferably comprise resilient conducting fingers 15 having at their ends contact tips 16 provided with curved contact surfaces. The five contacts are mounted upon three metallic brackets 17, 18 and 19 each secured to the insulating block 12 by one or more bolts 20. The bracket 17 carries the contact 5, the bracket 18 carries the contacts 6 and 7 and the bracket 19 carries contacts 8 and 9. The contacts are thus divided into three electrically independent sets. Each of the contacts is secured, preferably at its lower end, to its respective bracket, by a screw 21, said brackets being of suitable construction to support said contacts in a stepped relation with respect to the movable contact, to be successively engaged thereby in two sets as above set forth. The brackets 18 and 19 are provided with terminal clamps 22 and 23 respectively. The clamp 22 carries a terminal device 24 and the clamp 23 a terminal device 25, said terminal devices being illustrated as conductor or cable sockets. The casing has openings in its end in line with said terminals and insulating bushings 26 for said openings.

The movable contact 10 is mounted upon a reciprocating bar 27 which in practice may be provided with any suitable operating means. The box 1 is provided with an extended bearing 28 for the bar 27 and said bar is preferably rectangular in cross section to insure against rotation of the contact 10. The contact 10 comprises a metallic plate secured to the end of the bar 27 by a bolt 29. The plate, comprising the contact 10, is on its left hand side of sufficient width to engage all three contacts 5, 6 and 7 and is of such restricted height as to disengage contact 16 prior to engaging contacts 6 and 7. On its opposite side the contact plate 10 is of such width as to engage both contacts 8 and 9 but is of a stepped construction, being provided with an extension 30 for maintaining engagement with the contact 9 upon engaging contact 8. The pur-

pose of this arrangement will be hereinafter set forth. It should be understood however that the extension 30 might be dispensed with, if desired, and that the contact 10 might be arranged to remain in engagement with both of the contacts 5 and 9 upon engagement with the remaining contacts according to the results desired. The corners 31 and 32 of the contact plate 10 are preferably rounded and are preferably supplied with lubricant to prevent undue friction and wear of the same, and also of the tips of the stationary contacts. This lubrication is accomplished by a lubricant pad 33 clamped between the contact plate and a plate 34, the lubricant being supplied to the face of the contact plate through passages 35. In practice, one of these feed passages is preferably provided for each of the stationary contacts. Also, in practice the contact 10 is preferably insulated from the operating bar 27 and from the bearing of said bar. As illustrated, this is accomplished by an insulating strip 36 interposed between the contact 10 and the lubricating pad and plate 34 and by an insulating washer 37 interposed between said contact plate and the nut of bolt 29. The contact 10 may be insulated from the bolt 29 either by spacing, as illustrated, or by providing the opening in said contact with an insulating bushing.

The mechanical operation of the controller as thus far described is as follows: Assuming that the contact 10 is pressed downwardly from the position illustrated, it will simultaneously engage and bridge contacts 5 and 9, then disengage contact 5 and thereafter simultaneously engage and bridge contacts 6, 7 and 8, at the same time remaining in engagement with contact 9. When moved in the opposite direction the contact 10 will simultaneously disengage the contacts 6, 7 and 8 and then engage contact 5 and thereafter simultaneously disengage contacts 5 and 9. During the first operation the contact plate 10 is pressed against the lubricant pad 33 causing lubricant to be fed through the passages 35 to the active faces of all of the engaging contacts This reduces the friction and wear, at the same time permitting the contact fingers to be so tensioned as to insure an efficient electrical contact. Further, the curvatures of the engaging faces of the contacts facilitate the operation of the controller and prevent stubbing and consequent buckling and distortion of the contact fingers.

The resistance element 11, as illustrated, comprises a resistance coil mounted upon an insulating tube 40. This tube is mounted upon a rod 41 secured at its lower end, as by means of a nut 42, to the extension 14 of the insulating block. The tube 40 is firmly secured on the rod by a nut 43 threaded onto the upper end of the bolt. The resistance element may, of course, be connected in circuit, as desired. As illustrated, the upper terminal thereof is coiled about the rod 41 clamped between the nut 43 and a second nut 44, while the lower terminal thereof is clamped by a nut 45 to one of the bolts of the bracket 18 carrying the contact fingers 6 and 7. This connects the resistance between the contacts 6 and 7 and the upper end of the rod 41, while said rod is connected at its lower end to the bracket 17 carrying the contact finger 5. This is accomplished by a conductor 46 clamped to the rod 41 by a nut 47 and connected to the bracket 17 by its securing bolt. An insulating disk 48 is preferably secured by a nut 49 to the upper end of the rod 41 of the resistance element to positively maintain the upper end of said element out of contact with the walls of the inclosing box should said element vibrate.

With the connection of the resistance element as above set forth bridging of the contacts 5 and 9 would result in completing a circuit from one terminal, for instance the terminal 25, through contact 9 and movable contact 10 to contact 5, thence through the supporting bracket of said latter contact by conductor 46 through the rod 41, thence to and through the resistance element 11 to the bracket 18 and terminal 24. The contact 10 upon leaving contact 5 would interrupt the aforesaid circuit, and, upon bridging contacts 6, 7 and 8, would complete a circuit from terminal 25 to bracket 19, thence through both contacts 8 and 9, by contact 10 to contacts 6 and 7 and thence to terminal 24, as already specified. The second circuit, it will be noted, excludes the resistance element 11 from circuit.

From the foregoing it will be observed that when the resistance is included in circuit with a consequent reduction in current and potential the contact 10 engages but two contact fingers but when the resistance is excluded from circuit said contact engages four contact fingers. Thus the purpose and advantage of the number and arrangement of contact fingers illustrated will be apparent to those skilled in the art.

The application and utility of the controller as above described, or with modifications in the circuit arrangement, will be apparent to those skilled in the art. For instance, as illustrated it would be particularly adapted to use as a power controller for an electric motor employed to start an automobile as disclosed in my co-pending application aforesaid.

What I claim as new and desire to secure by Letters Patent is:—

1. A circuit controller comprising stationary contacts, and a movable contact to engage the same and means carried by said

movable contact for lubricating the engaging faces of said contacts.

2. In a circuit controller, in combination, a reciprocable contact, a base, a plurality of contact fingers mounted on said base in a spaced relation to receive said reciprocable contact between the same and to be engaged thereby, and means carried by said reciprocable contact to lubricate the contact surfaces of said contact fingers.

3. In a circuit controller, in combination, a reciprocable contact, a base, a plurality of contact fingers mounted on said base in a spaced relation to receive said reciprocable contact between the same and to be engaged thereby, and means carried by said reciprocable contact to lubricate the contact surfaces of said contact fingers, said contact fingers having inclined surfaces to be engaged by said contact member.

4. A circuit controller comprising a reciprocating member, a contact connected therewith, a lubricant pad interposed between said contact and said member, lubricant passages from said pad to the contact surface of said contact, and stationary contacts arranged to be engaged by the lubricated surface of said former contact.

5. A circuit controller comprising a reciprocating member, a contact connected therewith, a lubricant pad interposed between said contact and said member, lubricant passages from said pad to the contact surface of said contact, and stationary contacts arranged to be engaged by the lubricated surface of said former contact, said stationary contacts being resilient and upon engagement with said former contact exerting a pressure thereon to compress said lubricating pad.

6. A circuit controller provided with a plurality of sets of yielding contact fingers, a coöperating contact member reciprocable therebetween and longitudinally thereof, said contact fingers being of varying length and said reciprocable member having contact parts of varying length.

7. In a circuit controller, a casing, a contact member reciprocably mounted in one end of said casing, an insulating base secured within said casing at its opposite end, contact fingers fixed to said base and projecting therefrom longitudinally of and on opposite sides of the line of movement of said reciprocable member, and a resistance element supported in said casing in a parallel relation with respect to said contact fingers.

8. In a circuit controller, in combination, a casing, a base fixed to one end thereof, a contact member reciprocably mounted in the opposite end of said casing, a plurality of contact fingers mounted on said base to be engaged by said reciprocable contact member and disposed in a parallel relation thereto, and a resistance element mounted upon said base and extending parallel to said contact fingers.

9. In a circuit controller, in combination, a casing, a base mounted therein, a plurality of contact fingers mounted on said base in a parallel relation, a rod secured to said base in a parallel relation with said contact fingers, a resistance coil mounted on said rod and connected to certain of said contact fingers, and a contact member reciprocably mounted in said casing to engage said contact fingers.

10. In a circuit controller, in combination, a casing, a base mounted therein, a plurality of contact fingers mounted on said base in a parallel relation, a rod secured to said base in a parallel relation with said contact fingers, a resistance coil mounted on said rod and connected to certain of said contact fingers, and a contact member reciprocably mounted in said casing to engage said contact fingers, said resistance having one terminal electrically connected to certain of said fingers through said rod.

11. In a circuit controller, in combination, a casing, a base mounted therein, a plurality of contact supporting brackets fixed to said base and insulated from one another, certain of said brackets having terminal devices, contact fingers mounted on said brackets, a resistance element mounted on said base and electrically connected to certain of said brackets and a movable contact member within said casing to engage said contact fingers.

12. In a circuit controller, in combination, a casing, a base mounted within said casing at one end thereof, contact fingers and a resistance element fixed to said base and all projecting toward the opposite end of said casing, and a contact member reciprocably mounted in the latter end of the casing to move longitudinally of said contact fingers and to coöperate therewith.

13. In a circuit controller, in combination, a casing, an insulating base mounted therein, stationary contacts and a resistance element mounted on said base, and a controlling member engageable with said contacts to successively establish circuits including and excluding said resistance elements, said controlling member disengaging certain of said contacts to interrupt circuit during said change of circuits.

14. In a circuit controller, in combination, a base, three contact supports and a resistance element mounted upon said base, said supports being insulated from one another and said element being electrically connected between two of said supports, contacts carried by said supports, and a single contact member engageable with said fingers to establish circuits including and excluding said resistance element.

15. In a circuit controller, in combination, a substantially rectangular casing, an insulating base fixed to one end thereof, a contact member reciprocably mounted in the opposite end of said casing, a plurality of yielding contact fingers mounted on said base to receive said reciprocable contact between the same and to be engaged thereby successively in groups, and a resistance element mounted on said base and electrically connected between the contact fingers of one of said groups.

In witness whereof, I have hereunto subscribed my name in the presence of two witnesses.

CLARK T. HENDERSON.

Witnesses:
C. T. EVANS,
FRANK H. HUBBARD.

Copies of this patent may be obtained for five cents each, by addressing the "Commissioner of Patents, Washington, D. C."