Sept. 5, 1967 W. J. FITZGERALD 3,339,531

FLASH-TYPE STEAM GENERATORS

Filed June 29, 1965

Fig. 1

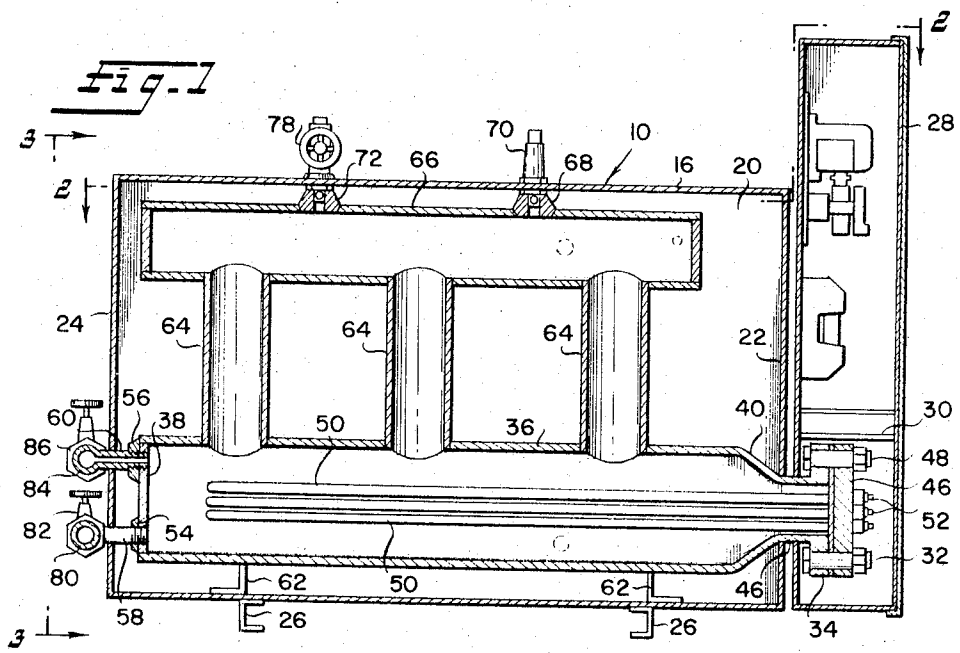

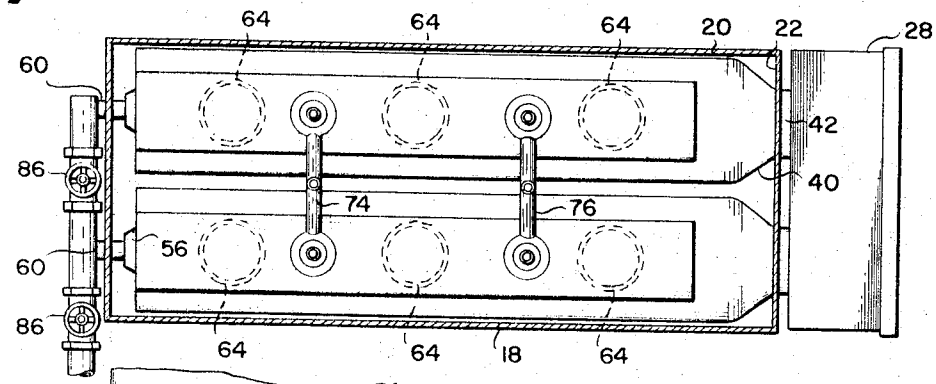

Fig. 2

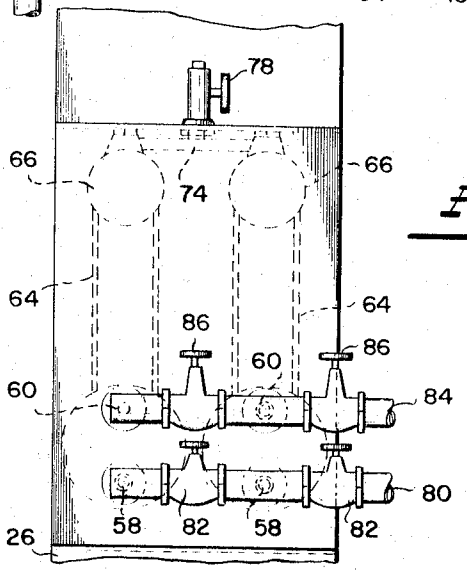

Fig. 3

INVENTOR
William J. Fitzgerald

BY *Lawrence J. Winter*

ATTORNEY

United States Patent Office 3,339,531
Patented Sept. 5, 1967

3,339,531

FLASH-TYPE STEAM GENERATORS

William J. Fitzgerald, 16 N. Edison St., Arlington, Va. 22203

Filed June 29, 1965, Ser. No. 467,877
4 Claims. (Cl. 122—32)

The present invention relates to a steam generator or boiler, and more particularly to a flash-type steam generator.

In accordance with the present invention, there is provided a relatively compact and preferably portable type of steam generator embodying a single unit for the uniform flash generation of steam, or a plurality of identical individual units that can be utilized together depending upon the required amount of steam to be generated.

It is an object of the present invention to provide a flash-type steam generator having a lower substantially horizontally extending water drum and a substantially horizontally extending steam header or drum, extending parallel to the water drum and spaced in vertical alignment therewith, which drums are connected to each other by vertical riser members connecting the top of the lower drum to the bottom of the upper drum, and which riser members are disposed at spaced intervals along the longitudinal axis of the drums so as to provide a uniform flow of steam to the steam header.

It is another object of the present invention to provide a flash-type steam generator consisting of a lower water drum and an upper steam drum connected by a plurality of vertical risers forming a single unit, which unit will occupy a substantially rectangular space and to which identical sections can be added alongside of a first section so as to provide a flash-type generator producing a maximum amount of steam in a given space.

It is another object of the present invention to provide a flash-type steam generator that is of simple and inexpensive construction and which can be made by unskilled labor and does not require any special tooling and further has no maintenance costs.

It is another object of the present invention to provide a single unit flash-type steam generator having a feed water inlet adjacent one end and a steam outlet adjacent the top of the unit which feed water inlet and steam outlet can be readily connected to a common feed water inlet header and a common steam outlet header, so that individual steam generating units may be added alongside of the original or first unit as required, so that steam generator units now in the field can be enlarged so as to produce additional steam, where steam requirements have increased, by merely adding additional identical units to the existing structures.

It is another object of the present invention to provide a flash-type steam generator consisting of a lower water drum having a heating element or heating means therein connected to an upper steam drum by a plurality of vertical risers spaced uniformly along the length or longitudinal axis of the drums so as to permit a maximum amount of steam to be generated in the unit, while providing a compact unit without any circulation problems as encountered heretofore.

It is another object of the present invention to provide a flash-type steam generator unit having a lower water drum and an upper steam drum connected to each other by a plurality of vertically disposed and laterally spaced risers, and in which the lower drum is provided with a readily detachable heating unit that can be inserted and removed from the lower drum end and the interior of the lower drum by merely unfastening bolt means so that the interior of the drum may be cleaned, if necessary, and the heating unit may be replaced if desired.

It is another object of the present invention to provide a portable flash-type steam generator that can be enclosed within a substantially rectangular housing or casing and in which the control means can be disposed adjacent the front end of the substantially rectangular casing in a complementary housing or casing.

It is another object of the present invention to provide a flash-type steam generator consisting of a lower water drum and an upper steam drum connected to each other by the plurality of vertically disposed riser tubes or members and in which the upper drum and the lower drum ends are formed integral with the longitudinal cylindrical casings of the drums, except for a closure member in the front end of the lower drum for readily and quickly inserting a heating element within the water drum.

Various other objects and advantages of the present invention are readily apparent from the following detailed description, when considered in connection with the accompanying drawing, forming a part thereof and in which FIGURE 1 is a side elevational view in section of the flash-type steam generator unit embodied in the present invention. FIGURE 2 is a top plan view, taken along line 2—2 of FIGURE 1, of the steam generator of the present invention, and FIGURE 3 is a rear end view looking along the line 3—3 in FIGURE 1.

Referring to the drawings the referenced numeral **10** generally designates a flash-type steam generator disposed in a substantially rectangular casing or housing **12** having a bottom **14**, a top **16**, opposite side walls **18** and **20**, and a front wall **22** and a rear wall **24**.

The bottom **12** is preferably disposed on two spaced C channel members **26**, although if desired, the channel members can be carried by casters or other means for making the unit portable.

Adjacent the front wall **22** and disposed in space relationship therewith is a vertically extending casing **28** in which are disposed the electrical control means of the steam generator, not forming part of the present invention. The lower part of the casing **28** is provided with a partition **30** forming a chamber **32** for receiving the front end **34** of a water drum **36**.

The flash-type steam generator is provided with the water drum **36** which is substantially horizontally extending and is cylindrical and has a circular closed rear end **38** welded to the steel water drum **36**. The front end of the cylindrical drum **36** is necked inwardly as at **40** and has a reduced tubular portion **42** extending through the casing. The tubular portion **42** has an annular flange **44** extending there around so as to form the front end **34**. A detachable circular closure member **46** is connected to the flange **44** by a plurality of bolt members **48** and a liquid-tight gasket of any suitable means may be employed so as to provide a liquid-tight seal between the flange **44** and the closure member **46**.

The closure member **46** is provided with a plurality of substantially U-shaped electrical resistant units **50** disposed in stacked relationship with the U's being in a horizontal plane to form a heater for the water drum. Each electrical resistant member is provided with its electrical terminals **42** for receiving a source of electrical energy from means not shown. The electrical resistant units are properly insulated by any suitable means from the water drum and they extend substantially the full length of the drum.

The rear end closure member **38** of the water drum **36** is provided with a feed water inlet connection **54** and a condensate return connection **56**. The feed water inlet connection **54** has a feed water inlet pipe **58** connected thereto while the condensate return connection **56** has a condensate return pipe **60** connected thereto. It will be noted that the pipes **58** and **60** extend through the rear

wall 24 of the casing while the closure member 38 is disposed inwardly of the wall. The bottom of the water drum 36 is supported by two L-shaped members 62 also supporting the outer periphery of the water drum and the L-shaped members 62 are disposed on the bottom 12 of the casing. The water drum is preferably 5 inches in diameter and there are three vertical risers or conduits 64 having their lower ends welded to the top of the water drum 36 and their upper end secured to a horizontal steam drum 66. The three risers are spaced equidistant from each other and are preferably 2 inches in diameter while the upper steam drum or header is preferably 3 inches in diameter. The water and steam drums are disposed in vertical alignment with each other and the three risers 64 are also disposed in vertical alignment with the water and steam drum as best seen in FIGURES 2 and 3. The rear end of the steam drum 66 is disposed in vertical alignment with the rear closure member 38 of the water drum while the front end of the steam drum 66 is disposed inwardly of the front wall 22, as best seen in FIGURE 1, and the steam drum has its upper periphery in spaced relationship with the top 16 of the casing.

The top of the steam drum 66 is provided with a connection 68 for receiving a safety valve 70, and a connection 72 for connecting thereto a steam outlet pipe or conduit 74. The safety valve 70 on units containing multiple sections, is disposed in a cross connection line 76 so that the safety valve may serve and function as the relief pressure valve for more than one individual unit, in the present invention. The steam outlet pipe 74 on units containing multiple sections is also cross connected to the two adjacent steam drums 66 of two separate and independent units so that a single steam outlet control valve 78 may be utilized, for both units.

It will also be noted that the feed water inlet pipes 58 on units having multiple sections are cross connected to each other by a horizontal cross connection pipe 80 as best seen in FIGURE 3. The cross connection pipe 80 is provided with feed water control valves 82 so that a single steam generating unit may be used or multiple units may be used as desired. A drain-blow-down cross connection line 84 is provided for as best seen in FIGURE 3, for connecting the 5" water drums 36 of multiple section units.

In operating of a steam generating unit of the present invention, consisting of a water drum and the uniformly supplied risers and the steam drum, electrical energy is supplied to the U-shaped resistant members as desired so that the water which is introduced into the water drum 36 from the feed inlet pipe 58 is heated to produce or flash steam, which steam rises through the riser member 64 to the steam drum or header 66. The steam thereafter flows out of the individual unit through the connection 72 to the steam outlet pipe 74 to a source of use not shown. After the steam has been cooled, any condensate is returned to the water drum from the source of use not shown, through the return condensate pipe 60. The desired amount of heat energy is supplied to the water drum by energizing one or more of the U-shaped resistant members 50. The unit is constructed so that it is a compact unit and supplies substantially instant steam. The positioning of the risers 64 uniformly of the water drum and the steam drum 66 permits a maximum or optimum operating condition of steam from the compact unit.

With the present invention it is readily apparent that the steam generator can be made in a single section, to produce a lesser amount of steam, and multiple sections to produce greater amounts of steam merely by adding the required number of sections together side by side, as shown in FIGURES 2 and 3. That is, referring to FIGURES 2 and 3, as desired, the present steam generator consists of a single steam producing unit consisting of the lower drum 36, the three risers 64, and the upper steam drum 66 with the safety valve 70 secured to the connection 68 and the steam outlet valve 78 secured to the steam outlet connection 72. Thereafter, if the installation requires a greater quantity of steam, it is only necessary to add another identical unit to the first unit by utilizing the cross connection pipe 74 and 76, for the steam outlet and safety valve, also the cross-connection feed water inlet pipe 80 and cross connection blow-down pipe 84 as already described.

In the present invention it is also readily apparent that the U-shaped resistant members 50 may be readily removed from the water drum 36 by unbolting the closure member 46 from the front of the flange 44 so that the heating units may be replaced, or cleaned, or the interior of the water drum can be made accessible.

It is further apparent from the present invention that a compact and economical flash-type steam generator unit, having a single section or one having multiple sections (as previously described) can be assembled in a small space and disposed in a substantially rectangular shaped casing.

Inasmuch as the location and arrangement of the relative parts may be changed without departing from the scope of the invention, it is to be understood that the invention is not to be limited to the above description, except by the scope of the following claims.

What is claimed is:

1. A multiple unit flash-type steam generator comprising a plurality of side by side sections each consisting of a lower horizontal water drum and a parallel upper steam drum in vertical alignment with said lower water drum, and at least three laterally spaced, vertical risers, said risers being in the same plane with each other, said risers having their upper ends connected to the bottom of said steam drum and their lower ends connected to the top of said water drum, a feed water inlet connected in each water drum and a steam outlet connection in each steam drum, and feed water inlet cross connection means for connecting the feed water inlet connections together, and steam outlet cross connection means for connecting the steam outlet connections together, a substantially rectangular casing enclosing said sections, and each water drum has a necked front end extending out of an opening in said casing, an annular flange disposed outwardly of said casing on said necked front end, and the ends of each said steam drum are closed off and the rear end of said water drum is closed off, and said flange forms an open end, and a closure member is bolted to each said flange to close it off, whereby a single or a plurality of steam units can be joined together to generate various amounts of steam.

2. The steam generator of claim 1 wherein a plurality of heater elements are carried by said closure member and are adapted to extend through said necked portion into said water drum to supply heat energy to said generator.

3. The steam generator of claim 2 wherein said water drum has a larger diameter than said steam drum, and said risers have a diameter smaller than the diameter of said steam drum.

4. A flash-type steam generator unit comprising a horizontal water drum with a closed end and an open end, a detachable closure member disposed over said open end, heating means carried by said detachable closure member and adapted for removal from said drum through said opening, a horizontal steam drum spaced above and in vertical alignment with said water drum, vertical risers having their lower ends connected to the top of said water drum, and having their upper ends connected to the bottom of said steam drum, said risers being spaced substantially equidistant from each other, and adjacent the front rear, and midportion of said steam drum, a feedwater inlet connection means in the rear wall of said water drum for connection to another unit, a steam outlet cross connection means in the top rear portion of said steam drum for connection to another similar unit, the front end of said water drum being necked inwardly and having an outwardly extending annular flange adjacent said open end, bolt means detachably connecting said closure member to said flange, a casing enclosing said unit, and said

necked portion of the water drum extending out said casing.

References Cited

UNITED STATES PATENTS

1,577,838 3/1926 MacLean.

2,625,915 1/1953 Glasgow et al.

3,104,653 9/1963 Taylor ---------- 122—32

FOREIGN PATENTS

1,270,452 7/1961 France.

CHARLES J. MYHRE, *Primary Examiner.*