April 1, 1947. A. J. WEGMANN 2,418,381

STEAM SEPARATOR

Filed Jan. 19, 1945 2 Sheets-Sheet 2

Fig. 3

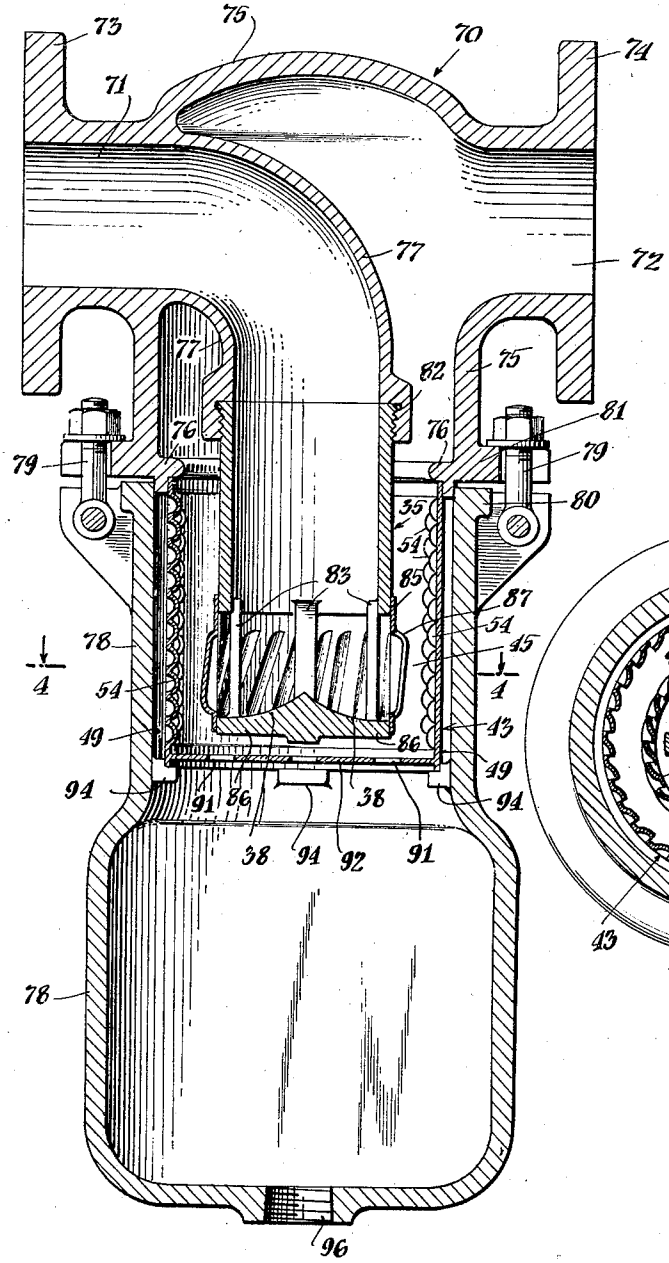

Fig. 4

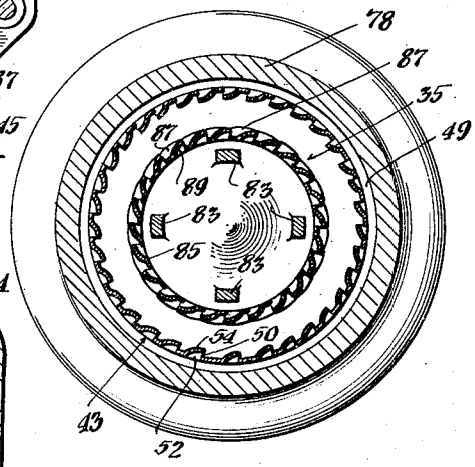

INVENTOR.
Adolph J. Wegmann
BY
George Heney
ATTORNEY

April 1, 1947. A. J. WEGMANN 2,418,381

STEAM SEPARATOR

Filed Jan. 19, 1945 2 Sheets-Sheet 1

Fig. 1

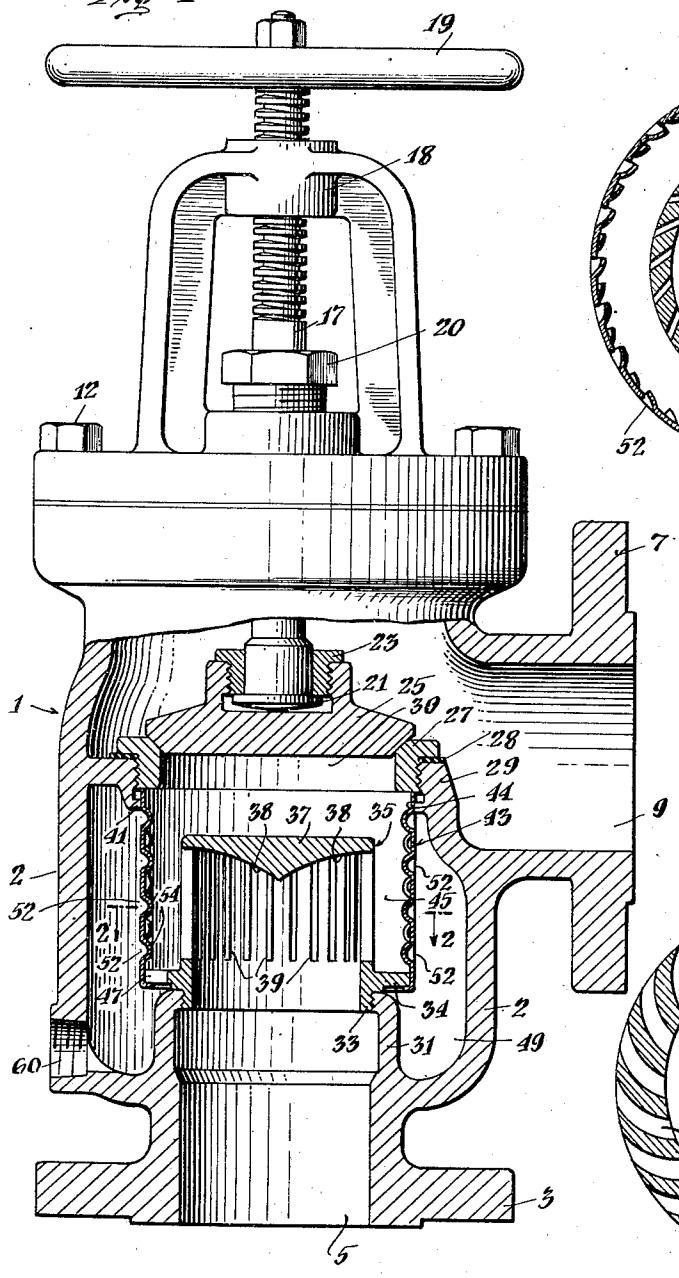

Fig. 2

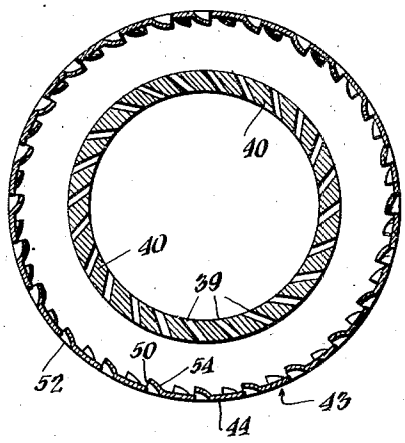

Fig. 5

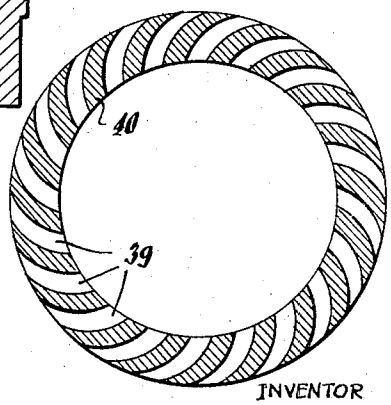

INVENTOR

Adolph J. Wegmann

BY George Hlorey

ATTORNEY

Patented Apr. 1, 1947

2,418,381

UNITED STATES PATENT OFFICE

2,418,381

STEAM SEPARATOR

Adolph J. Wegmann, Flushing, N. Y., assignor to Dri-Steam Products, Inc., a corporation of Delaware

Application January 19, 1945, Serial No. 573,565

7 Claims. (Cl. 183—84)

1

This invention relates generally to apparatus for confining and controlling flowing gaseous fluids, especially steam, and for separating from such gaseous fluids liquid or solid materials entrained and carried thereby. The invention finds particular application in connection with valves for controlling gaseous fluids such as steam.

The invention is hereinafter described in connection with control of steam flow and distribution although apparatus embodying the invention may be used for control of various vapors, saturated or superheated, or of other gaseous fluids which, because of their method of production or for other reason, may carry liquid or solid material suspended or entrained therein as they flow through pipes or other conduits to a place of use.

In steam generation, especially from waters which ordinarily are available, drops and fine particles of water and the solid material which becomes concentrated in the water within the boiler may be entrained by the steam as it flows from the boiler and, unless means are provided to remove them, are carried through the piping system to the apparatus in which the steam is to be used. These materials may be detrimental because of their erosive action or may result in objectionable incrustations or deposits within the system or apparatus.

Many types of separating devices have been proposed in the endeavor to eliminate or reduce the amount of the entrained liquid and solid material. Some of these devices utilize a change in direction of the flowing steam relying on the inertia of the liquid or solid particles to throw them into a collecting space suitably positioned with respect to the zone of change of direction of flow. Others of these separating devices have utilized impingement of the steam against a surface intended to arrest the movement of the liquid or solid particles, these particles clinging to said surface or draining away along the same, while the steam passes toward the outlet of the device. In some of these impingement types of separators the surface which retains the liquid or solid material has been so formed as to provide a scrubbing action on the flowing steam in the endeavor further to remove liquid or solid particles. Such devices are not entirely satisfactory because the steam acting upon these materials collected on such a surface tends again to pick up the liquid or solid material and carry it along as it flows to the steam outlet of the device.

It is an object of the present invention to improve the efficiency of separation in a separating device of the type above described.

2

It is another object of the invention so to effect the separation of the liquid and solid materials from the steam that they may not again be picked up by the steam.

It is a further object of the invention so to maintain separation, once effected, of the liquid and solid materials from the steam that they may be removed readily to a place of disposal while continuing the normal steam flow through the device without opportunity for remingling with the steam.

It is a further object of the invention to provide devices for effecting the separation of the liquid and solid materials from the steam which may be incorporated in ordinary separators and combined separators and stop valves without radical change in the design of such devices.

The present invention provides an improved construction in a separator or a valve structure embodying a separator device and accomplishes this improvement by the particular combination of elements which act upon the flowing steam.

The invention includes as one of its characterizing features a structural arrangement whereby a hollow perforated cylindrical member is mounted concentrically within and in spaced relation to the enclosing walls of the separator or valve housing, as the case may be, and is associated with means which receives steam from a steam inlet connection and discharges the same outwardly toward and along the inner surface of the perforated cylindrical member so that the heavier liquid or solid particles carried by the steam are caused to impinge upon the perforated surface and to pass through the perforations into a receiving space behind the same.

It is a further feature of the invention that the perforated cylindrical wall member is so associated with the housing or partition elements connected thereto as to create in effect a dead space between the outer surface of the cylindrical member and the housing into which the steam will have little or no tendency to penetrate in flowing along the inner surfaces of such member toward the steam outlet.

Still another feature of the invention, as applied to combination steam separators and stop valves, resides in an arrangement whereby the separating elements remain stationary and are not movable with the stop valve, thus insuring that a maximum separating surface is presented to the passing steam in all of the various open positions of the valve.

In the preferred forms of the invention as shown, the hollow perforated cylindrical member is provided with inwardly projecting lip portions each respectively associated with and overhanging an individual perforation in position to intercept solid and and liquid particles being propelled toward or swept along the inner wall surfaces of such member by the passing steam.

In the preferred forms of the invention as shown, the projection of the steam outwardly toward and more or less tangentially along the inner wall surfaces of the perforated separating member is facilitated by means of an inner hollow cylindrical body disposed concentrically within the perforated separating member and receiving the incoming steam from the steam inlet connection of the valve or separator housing. This hollow cylindrical member is provided with spaced elongated passages in the side walls thereof through which the steam is directed outwardly toward and along the inner wall surface of the perforated separating member. These passages are preferably non-radial with respect to the axis of the cylindrical body and may be vertically extending or inclined at an angle to the vertical. In either case the steam projected therethrough will be caused to swirl along the intervening annular space and sweep over the inner surface of the perforating member in passing toward the steam outlet.

Other features of the invention have to do with the arrangements whereby the separating elements may be removed and inserted without removing the valve or separator structure from the steam line or completely dismantling it as is usually the case with prior constructions.

Other features and advantages of the invention will be understood from the description to follow of the drawings, in which:

Fig. 1 shows in part vertical section and in part side elevation an embodiment of the invention in a valve structure;

Fig. 2 is a horizontal cross section on line 2—2 of Fig. 1;

Fig. 3 is a vertical section of a separator embodying the invention;

Fig. 4 is a horizontal cross section on line 4—4 of Fig. 3; and

Fig. 5 is a cross section of a modified form of the hollow inner steam receiving member.

In Fig. 1 the elements above generally described are shown arranged within the body 2 of an angle valve 1, the inlet opening 5 of which may be connected by flange 3, for example, to the outlet flange of a boiler and the outlet opening 9 of which may be connected by flange 7 to a companion flange in the piping system. In conventional manner stem 17 passes through stuffing box 20 in the valve bonnet and, upon operation of the hand wheel 19 turning stem 17 in threaded hub 18, is given upward or downward movement. By means of head 21 formed upon stem 17 and follower nut 23 threaded into the hub of valve disc 25 opening and closing movement of the valve with respect to seat ring 27, threaded into transverse wall 29 and made fluid tight thereto with gasket 28, is accomplished in the usual manner.

In the particular embodiment illustrated in Fig. 1, the walls of the inlet opening 5 are extended upwardly to form an annular wall section 31 within the valve body. This annular wall section 31 is threaded internally to receive the threads upon the external surface of the annular end portion 33 of a hollow cylindrical member 35.

The cylindrical member 35 extends upwardly from its point of attachment at the portion 33 toward the valve seat 27 and is closed at its upper end by a wall 37. The cylindrical wall of the member 35 is provided with elongated passages or slots 39 for passage outwardly therethrough of the steam received into the hollow space of the cylindrical member. The steam flow is directed toward these openings by the curved surface 38 of the end wall 37 of said hollow member.

As will be understood from consideration of Fig. 2 taken in connection with Fig. 1, the elongated passages 39 extend generally in the direction of the length of the cylinder but lie in planes inclined at an angle to the circumferential extent of the cylinder and that are non-radial with respect to the axis of the cylinder. Consequently, the steam flows outwardly through the passages 39 in directions generally tangential to the inner wall surface of the perforated separating shell 43 which will hereinafter be more fully described. A sufficient number of these passages are provided to secure the requisite flow area, having regard to the length of said passages and their widths, for travel of the steam therethrough with a minimum of back pressure at a high velocity. The angularity of the planes of the passages 39, that is, of the walls or vanes 40 spaced around the circumference to form these passages 39, may be such that considerable centrifugal force will be brought upon the entrained water and solid material carried by the steam projected outwardly from the hollow member 35 through such passages.

The elongated passages may be of uniform cross-section throughout or may be of varying cross-section. Likewise they may be so formed that steam passes therethrough in a straight path, or they may be curved. In a preferred form, as shown in greater detail in Fig. 5, the passages are curved and are somewhat constricted in width toward their outlets, thus insuring that the steam passing therethrough will not only tend to sweep more effectively across the separating wall surface but will impinge thereon with accelerated velocity.

Fitted in abutting relation to an annular boss 41 on the underside of the transverse wall 29 is the perforated cylindrical wall or shell 43. The perforated separating wall or shell 43 is arranged concentrically within and in spaced relation to the valve body or housing 2 and is also concentrically arranged in spaced relation to the hollow member 35 so as to provide an annular passage 45 between said shell and said hollow member. In the form shown in Fig. 1, the hollow cylindrical member 35 is sufficiently shorter as compared to the perforated shell 43 as to provide space for unrestricted flow of the steam about the closed end of the hollow cylindrical member 35 toward the valve opening 30. One or more openings 47 in the flange 34 may be provided for draining off any liquid condensate or solid particles that may have become deposited upon the inner surfaces of the separating wall 43.

An annular receiving space 49 is provided between the walls of the valve body 2 and the cylindrical separating wall 43. Due to the abutting and more or less close fitting relation of the upper portion of the perforated shell 43 and the inwardly extending flange or boss 41 there will be little or no tendency for steam to pass through the perforated wall or shell 43 into such space,

and so far as the steam flow is concerned, this space may be regarded, therefore, as a dead space or pocket receiving no part of the steam flow and not influencing such steam flow in any respect other than as it participates in the separating action.

As shown in Figs. 1 and 2, the perforated cylindrical separating wall or shell 43 may advantageously be formed from perforated sheet metal that has subsequently been shaped to cylindrical form and then preferably butt or spot welded or brazed at the abutting edges to maintain the cylindrical shape. The perforations may take various forms. As shown, the perforations are of the crescent lip slot type; that is to say, the metal has been perforated at spaced intervals to form spaced parallelly arranged slits and then pressed inwardly, as viewed in Figs. 1, 3 and 4, adjacent such slits to form crescent-shaped slots 52. The pressed-in portions assume the form of cup-shaped projections or hoods 54 extending over and defining the crescent-shaped elements of slots 52. The slots and their associated hoods 54 are preferably arranged in staggered relation as shown, and the separating wall carrying such projections and slots is so disposed with respect to the dispositions of the elongated passages 39 of the inner hollow cylindrical body 35 that the steam projected from the passages 39 in the wall of such cylindrical body will impinge upon the inner surfaces of the wall 43 and travel toward the crescent slots 52. Because of the shape of the slots and directional flow of the steam as above indicated, the liquid and solid material carried by the flowing steam and directed outwardly toward the wall 43 will either directly enter the slots 52 and pass into the receiving space 49 or will be intercepted by the wall surfaces of the shell 43, and then travel along these surfaces until guided through the slots 52 to the space 49 outside of said separating wall or shell 43.

The liquid and solid materials which are forced through the perforations 52 into the annular space 49 may be removed through the drain outlet 60 leading to a steam trap, or other means of disposal, not shown. If desired, as for example when the valve is used as a boiler stop valve, the connection from drain 60 may be made to the water space or to the steam space of the boiler in order to conserve the heat in the water so separated.

It will be apparent from the above description that separation of the liquid or solid materials from the flowing steam occurs while these materials are impelled to move continuously forward to a zone out of the steam flow and under conditions which prevent the steam again picking up these liquid or solid materials and carrying them out through the valve opening. It will be observed that the perforated separating wall and the cooperating vaned steam directing member 35 remain stationary during the operation of the stop valve and that their relation remains unchanged during all stages of movement of the valve 25, thus insuring that the capacity for separating action will be maintained unaffected by the valve operations. It is further to be observed that access to the separating elements to permit of their removal for cleaning or replacement is made possible by merely removing the valve bonnet and the valve 25 from the valve body and then removing the valve seat.

Figs. 3 and 4 show an embodiment of the invention in a steam separator of a type commonly

used for separation of water and oil from exhaust steam having a body 70 with oppositely disposed inlet and outlet openings 71 and 72 respectively provided with flanges 73 and 74 for fitting to the companion flanges of the piping system. Within the chamber formed by the walls 75 of the body 70 an inlet connection is carried downwardly by means of the walls 77 to direct the inflowing steam downwardly, thus to cause reversal of the flow of the steam as it passes upwardly around the outside of the walls 77 toward the outlet 72. A collecting chamber 78 is held by means of the bolts 79 and flange 80 to the flange 81 of the body 70 of the separator.

In the embodiment of the invention illustrated in Figs. 3 and 4, the hollow cylindrical member 35 may provide a downward extension of the inlet portion 77 its upper end being threaded into the terminal portion 82 of the inlet portion 77. At its lower end the hollow cylindrical member 35 is formed with spider legs 83 extending lengthwise of the axis of the cylinder to carry the end wall 86 having curved surfaces 38 as in Fig. 1.

Fitting circumferentially about the hollow member 35 at the portion thereof which is formed with said spider legs 83 is the cylindrical sleeve 85, which may be of sheet metal, formed in a die or by other means to provide vanes 87 spaced about the circumferential extent thereof adjacent elongated openings 89 in said sleeve. The vanes and openings have their length extending generally in the direction of the axis of the cylinder but at an angle to the dimension of the cylindrical surface of said sleeve which is parallel to the axis. As these vanes, although curved, are positioned with the general extent of their surface intersecting the circumferential extent of said cylindrical member 85 and with the outer portion directed in a non-radial direction, that is, not normal to said circumferential extent, and in consideration of the angularity of these vanes above referred to, the steam passing through the openings 89 corresponding to the openings 39 of Fig. 1 will be directed outwardly but also downwardly.

Surrounding the hollow cylindrical member 35 within the walls 78 of the collecting chamber and fitted to the annular portion 76 of said body 75 is a perforated separating wall or shell 43. This shell is spaced from the hollow member 35 to provide therebetween the annular passage 45 for the steam which communicates with the outlet 72 through the space within the body 70. In the embodiment illustrated in Fig. 3 this shell is substantially closed at its lower end, except for drainage openings 91, by the transverse end wall 92. The shell 43 is supported at its lower end on lugs 94 projecting inwardly from the wall 78 of the collecting chamber. The shell 43 is spaced from the side wall of the chamber so as to provide an annular space 49 therebetween to receive and guide downwardly into collecting chamber 78 whatever liquid or solid material is separated from the passing steam by the projecting lips 54 or is otherwise directed through the slots 52.

The shell 43 is shown as provided with cup-like hoods or lips 54, similar to those shown in Figs. 1 and 2, with the mouths of the slots 52 defined thereby facing oppositely to the direction of the steam projected from the openings 89 of hollow member 35 across the annular space 45 toward such slots. Liquid and solid materials directed through the slots 52 into space 49 pass down into the collecting chamber 78 as above mentioned. It will be apparent that the con-

struction of the shell 43 as illustrated in Figs. 3 and 4 is generally the same as that of the shell 43 of Figs. 1 and 2. All of the physical actions which have been described in connection with Figs. 1 and 2 are performed by the shell 43 of Figs. 3 and 4 cooperating with the hollow member 35 and its directing vanes and with the body and the collecting chamber of the separator.

Due to the angularity of the vanes 87, as above described, the steam will be forced downwardly as well as outwardly as it is projected through the openings 89 of the hollow member 35. In consideration of the reversal of the steam to the upward direction, the end wall 92 preventing exit from the annular space 45 at the lower end, this downward flow of the steam may assist in separating from the steam and throwing down toward the end wall 92 part of any condensate or solid materials carried thereby. Water and any solid material which may be carried along with the water may pass into the collecting chamber 78 through the drainage openings 91. A drain pipe may be connected to the threaded opening 96 in the bottom of the collecting chamber 78 of the separator for disposal of the separated water and solid material.

The main action of separation, however, is accomplished by virtue of intercepting the liquid and solid materials by means of the crescent shaped slots 52 and cup-shaped hoods 54, that is, by virtue of these cups collecting these materials and passing them through the perforations or slots 52 in the separating wall or shell 43 out of the zone of steam flow.

It will be understood that the invention may take various embodiments other than those shown and described, and that various changes in the details of the structure and arrangements may be made without departing from the invention which it is not to be deemed as limited except as indicated by the appended claims.

I claim:

1. A separator for steam and the like comprising an enclosing casing having steam inlet and outlet connections, a perforated cylindrical separating wall disposed in spaced relation to the side walls of said casing intermediate said connections and defining with said side walls a substantially closed liquid receiving space surrounding said separating wall, a hollow cylindrical body concentrically arranged within and in spaced relation to said perforated separating wall, said hollow body having a plurality of passages in the side walls thereof that are inclined outwardly in a generally tangential direction toward said perforated separating wall, and said hollow body being connected to receive steam from said inlet connection and direct it outwardly toward and along the inner surface of said separating wall in passing to said outlet connection, whereby liquid and solid particles carried by the passing steam are thrown against and passed through said separating wall while the steam passes on to said outlet connection without passing through said closed space.

2. A separator for steam and the like comprising an enclosing casing having steam inlet and outlet connections, a perforated cylindrical separating wall disposed in spaced relation to the side walls of said casing intermediate said connections and defining with said side walls a substantially closed liquid receiving space surrounding said separating wall, a hollow cylindrical body concentrically arranged within and in spaced relation to said perforated separating wall, said hollow body having a plurality of aligned elongated passages through the side walls, said passages extending lengthwise of said body and being inclined with respect to said wall outwardly in a generally tangential direction toward said perforated separating wall, said hollow body being connected to receive steam from said inlet connection and direct it outwardly toward and along the inner surface of said perforated wall in passing to said outlet connection, whereby liquid and solid particles carried by the passing steam are thrown against and passed through said separating wall while the steam swirls through the space between said hollow member and said separating wall and passes on to said outlet connection without passing through said closed space.

3. A separator for steam and the like comprising a body providing a chamber having horizontally oppositely disposed steam inlet and outlet connections, a cylindrical casing removably attached to the lower portion of said body beneath said connections, a perforated cylindrical separating wall supported by and disposed in spaced relation to the side walls of said casing and defining with said side walls a substantially closed liquid receiving space surrounding said separating wall, conduit means within said body connected to said inlet opening and passing downwardly within said perforated cylindrical separating wall, a hollow cylindrical member closed at one end and connected at its other end to said conduit means to receive steam from said inlet connection, said hollow cylindrical member being concentrically arranged within and in spaced relation to said perforated separating wall and having a plurality of passages in the side walls thereof that are inclined outwardly in a generally tangential direction toward said separating wall to direct the steam received from said inlet connection outwardly toward and along the inner surface of said separating wall, whereby liquid and solid particles carried by the passing steam are thrown against and passed through said separating wall while the steam passes on to said outlet connection without passing through said closed space, said perforated separating wall being arranged within and supported by said removable casing so that one end thereof abuts an annular portion of the wall of said body when said casing is in attached position.

4. A separator according to claim 3 in which the removable cylindrical casing is extended below the separating wall zone thereof to form a liquid-receiving space and said space is separated from the space between said separating wall and said hollow cylindrical member by a horizontally extending partition which substantially prevents flow of steam downwardly into said liquid-receiving space.

5. A device for insertion in a valve structure of the type having a portion providing an annular seat surrounding a valve opening and a valve seating on said seat to close said opening which comprises a cylindrical shell having its cylinder wall formed at one end for fitting to said seat portion in a position concentric therewith and at the side thereof opposite to the seating surface in the axial direction, a hollow cylindrical body concentric with and positioned within said shell and having its cylinder wall formed at one end for fitting to a portion of the valve structure which extends about a passage communicating with the valve structure inlet, the wall of said hollow body

being spaced from said shell wall to form an annular passage therebetween, said hollow body being closed at the end of the cylinder opposite its said fitted end and having its cylinder wall formed with vanes arranged about the circumference thereof in spaced relation to provide louvre openings for passage of gaseous fluid therebetween, said vanes being arranged with their surfaces intersecting said circumference of said hollow body cylinder wall non-radially and so as to direct outwardly across said annular passage gaseous fluid received into said hollow body from said inlet to impinge upon the inner surface of said shell at a uniform angle, and a wall extending across said annular passage connecting said shell and said body adjacent the end of said body opposite its closed end to confine said gaseous fluid to flow in said annular passage toward said valve seat, said shell being provided with perforations through the wall thereof and cup-shaped hoods at the inner surface thereof extending over each perforation with the mouths of the cups facing toward the impinging fluid so as to intercept and to direct through said perforations in said shell wall liquid or solid material separated from said fluid impinging on said inner surface of said shell.

6. A separator for steam and the like comprising an enclosing casing having steam inlet and outlet connections, a perforated separating wall disposed within said casing intermediate said connections and extending about a central space in spaced relation to the side walls of said casing to define with said side walls a substantially closed liquid receiving space extending about said separating wall and said central space, and a hollow body within said central space having a peripheral wall in spaced relation to said perforated separating wall, said hollow body having a plurality of passages in said peripheral wall thereof that are inclined outwardly in a generally tangential direction toward said perforated separating wall, said hollow body being connected to receive steam from said inlet connection and direct it outwardly through said passages toward and along the inner surface of said separating wall in passing to said outlet connection, whereby liquid and solid particles carried by the passing steam are thrown against and passed through said separating wall while the steam passes on to said outlet connection without passing through said closed space.

7. A device for insertion in a valve structure of the type having a portion providing an annular seat surrounding a valve opening and a valve seating on said seat to close said opening which

comprises a shell open at one end and having a peripheral wall formed at said end for extending about the valve opening in abutting relation to said seat portion of the valve at the side thereof opposite to said seating surface in the axial direction, and a hollow body positioned within said shell open at one end and closed at the other end and having a peripheral wall formed at said open end for extending about a passage communicating with the valve structure inlet in abutting relation to said valve structure, the peripheral wall of said hollow body being spaced from said peripheral shell wall to form an annular passage therebetween, said hollow body being formed with openings in its peripheral wall spaced about the circumference thereof for passage of gaseous fluid therethrough, the surfaces of said passages intersecting the circumference of said hollow body non-radially so as to direct outwardly across said annular passage gaseous fluid received into the hollow space of said hollow body from said inlet to impinge upon the inner surface of said shell at an angle other than a right angle to said inner surface, and a wall connecting said shell and said body adjacent the end of said body opposite its closed end to confine said gaseous fluid to flow in said annular space toward said valve seat, said shell being provided with perforations in its peripheral wall having hoods cooperating therewith to intercept and to direct through said perforations liquid or solid material separated from said gaseous fluid impinging on said inner surface of said shell wall.

ADOLPH J. WEGMANN.

REFERENCES CITED

The following references are of record in the file of this patent:

UNITED STATES PATENTS

Number	Name	Date
2,202,164	Pascale	May 28, 1940
2,298,242	Wegmann	Oct. 6, 1942
532,296	Sweet	Jan. 8, 1895
579,457	Stut	Mar. 23, 1897
1,869,771	Pascale	Aug. 2, 1932
2,176,098	Pinto	Oct. 17, 1939
1,055,792	Plock	Mar. 11, 1913
1,791,304	Flick	Feb. 3, 1931
2,298,242	Wegmann	Oct. 6, 1942

FOREIGN PATENTS

Number	Country	Date
789,958	French	Nov. 9, 1935