Sept. 1, 1964 L. J. MISURACA 3,146,666

AUTOMATIC SLIDE PROJECTOR

Filed March 20, 1958 8 Sheets-Sheet 1

FIG. 1.

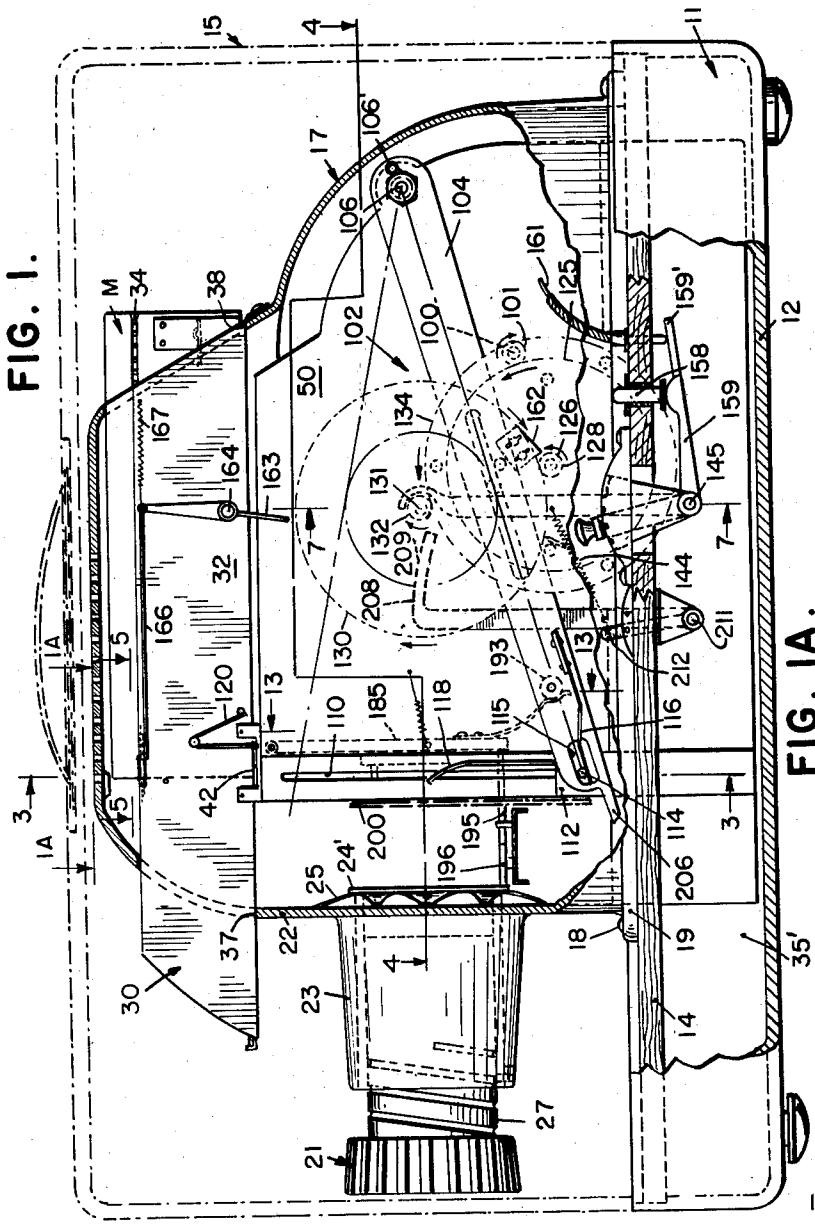

FIG. 1A.

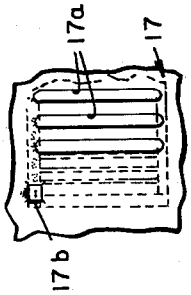

INVENTOR

LOUIS J. MISURACA

BY

Mason & Shaham

ATTORNEYS

Sept. 1, 1964 L. J. MISURACA 3,146,666

AUTOMATIC SLIDE PROJECTOR

Filed March 20, 1958 8 Sheets-Sheet 2

FIG. 2.

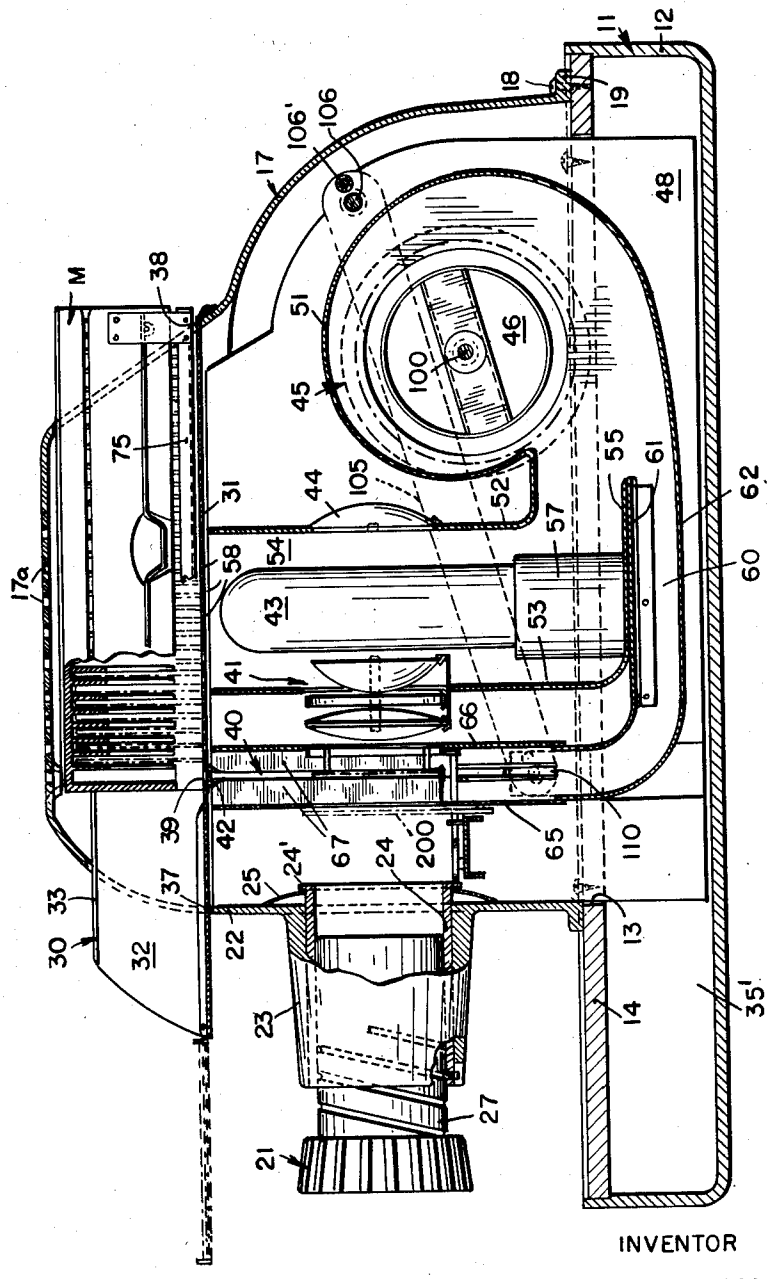

INVENTOR

LOUIS J. MISURACA

BY

Mason & Graham

ATTORNEYS

Sept. 1, 1964 L. J. MISURACA 3,146,666

AUTOMATIC SLIDE PROJECTOR

Filed March 20, 1958 8 Sheets-Sheet 3

FIG. 3.

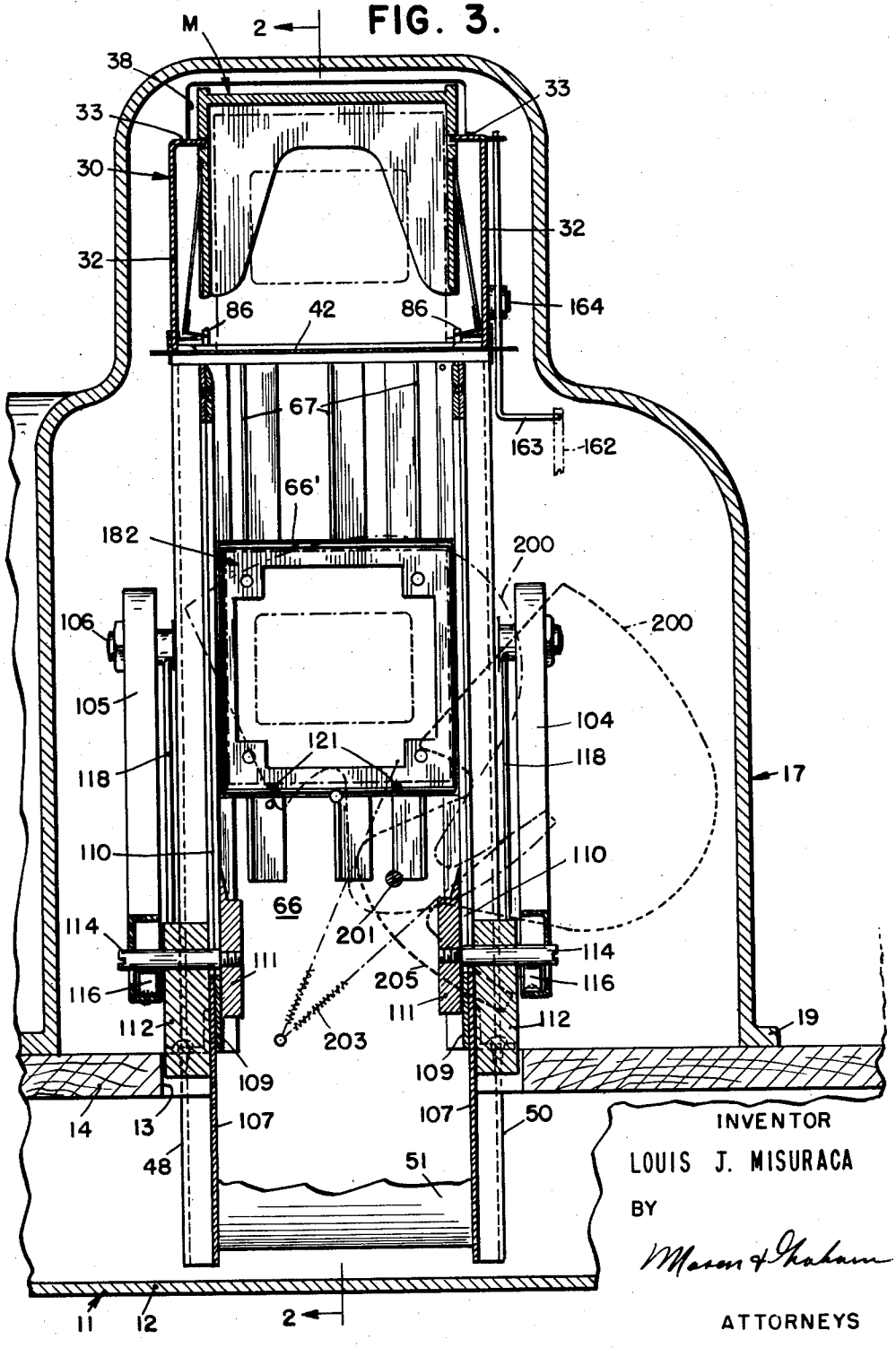

INVENTOR

LOUIS J. MISURACA

BY

Mason & Graham

ATTORNEYS

Sept. 1, 1964 L. J. MISURACA 3,146,666

AUTOMATIC SLIDE PROJECTOR

Filed March 20, 1958 8 Sheets-Sheet 4

FIG. 4.

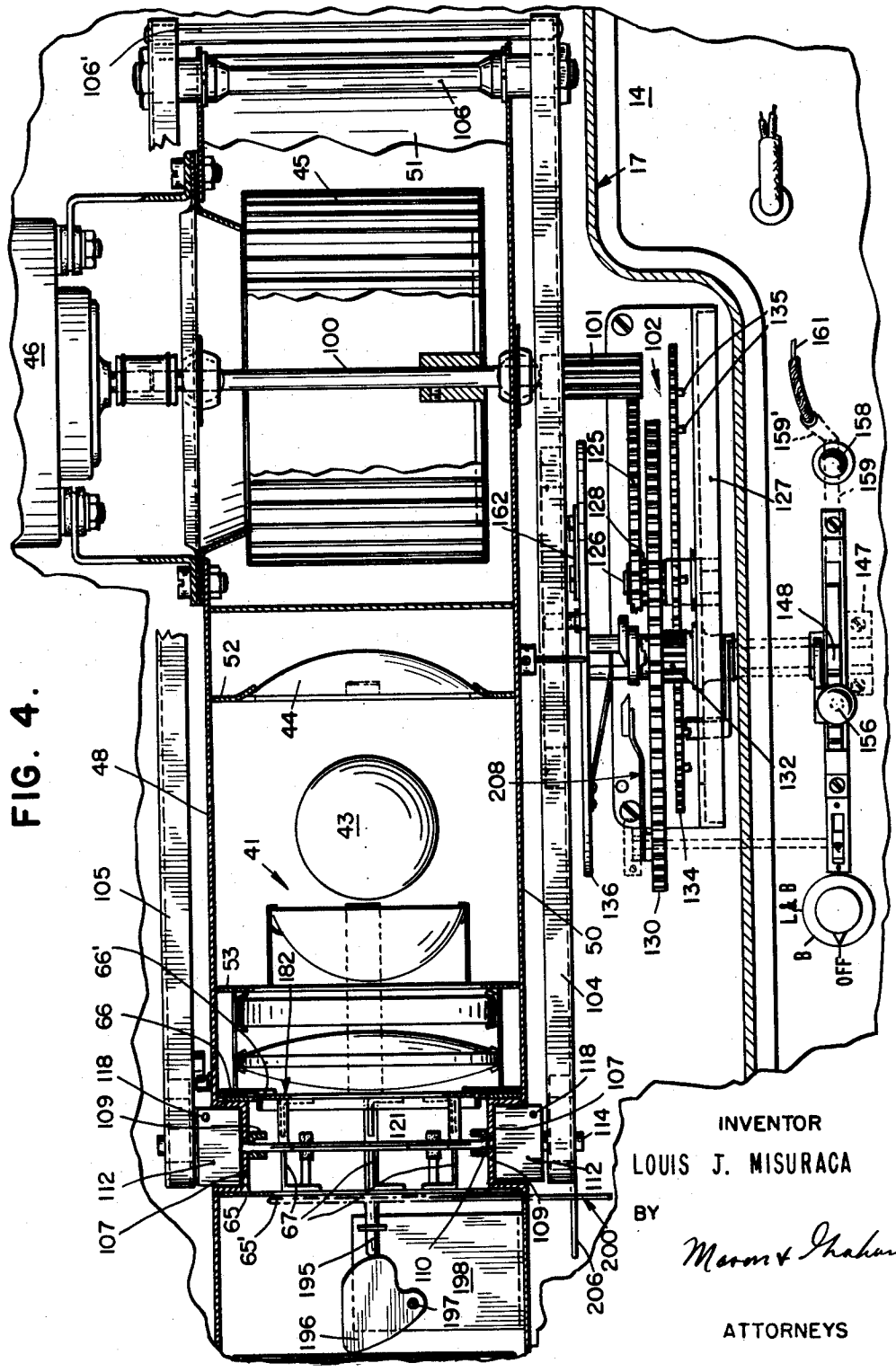

INVENTOR

LOUIS J. MISURACA

BY

Mason & Graham

ATTORNEYS

Sept. 1, 1964 L. J. MISURACA 3,146,666

AUTOMATIC SLIDE PROJECTOR

Filed March 20, 1958 8 Sheets-Sheet 5

FIG. 5.

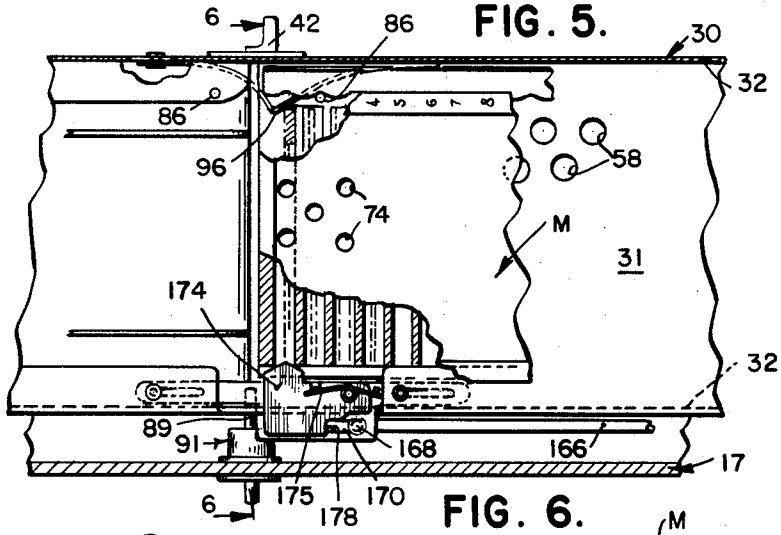

FIG. 6.

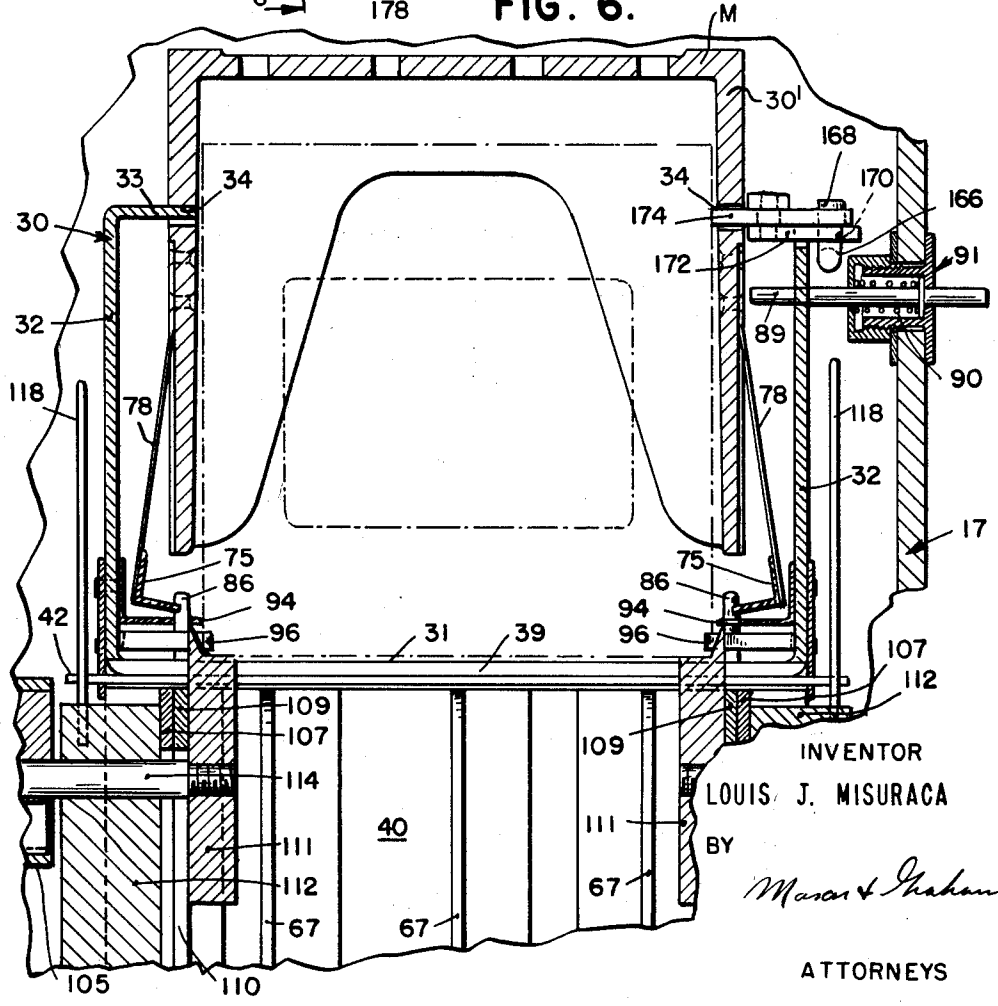

ATTORNEYS

Sept. 1, 1964 L. J. MISURACA 3,146,666

AUTOMATIC SLIDE PROJECTOR

Filed March 20, 1958 8 Sheets-Sheet 6

FIG. 7.

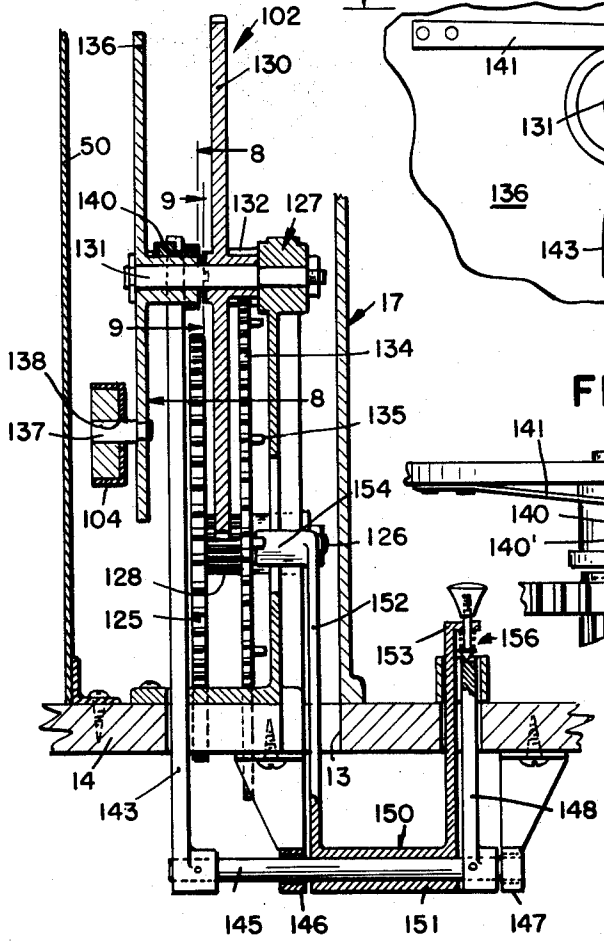

FIG. 8.

FIG. 9.

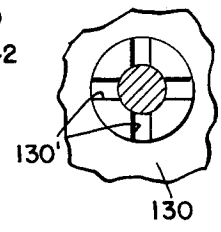

FIG. 10.

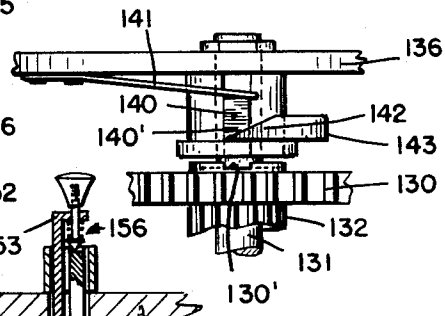

FIG. 12.

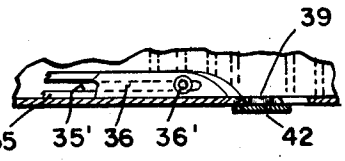

FIG. 11.

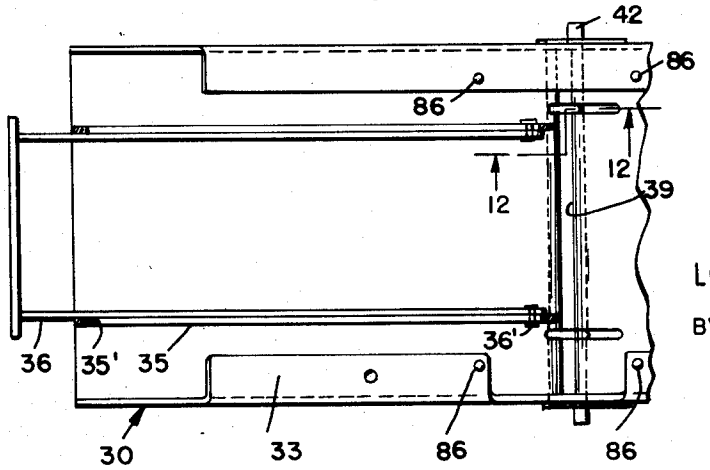

INVENTOR

LOUIS J. MISURACA

BY

Mason & Graham

ATTORNEYS

Sept. 1, 1964 L. J. MISURACA 3,146,666

AUTOMATIC SLIDE PROJECTOR

Filed March 20, 1958 8 Sheets-Sheet 7

FIG. 13.

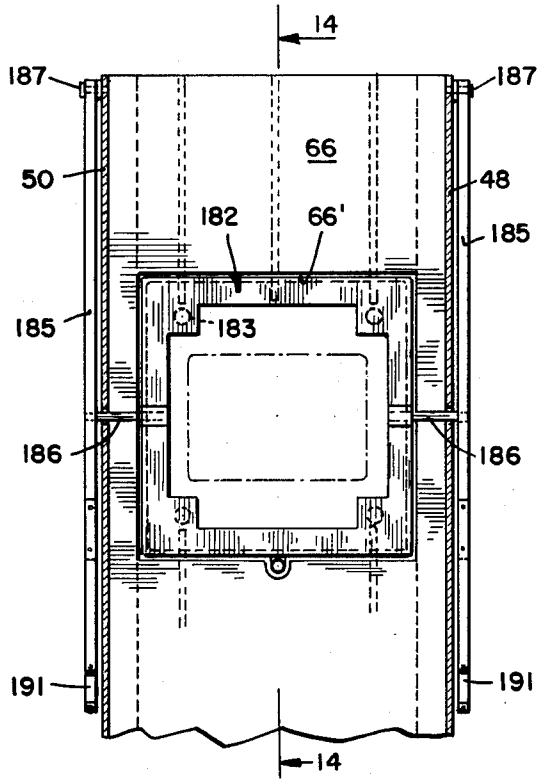

FIG. 14.

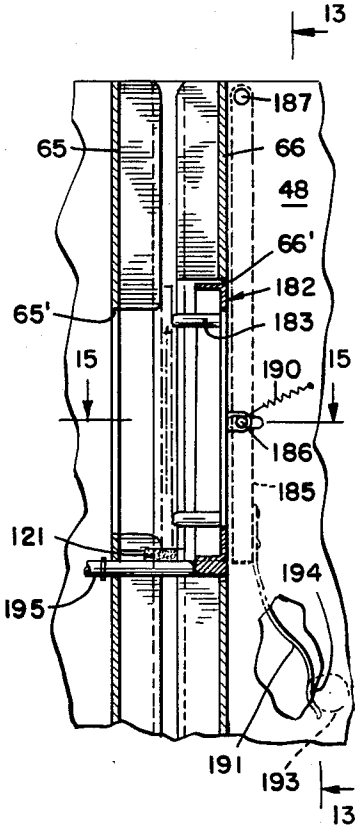

FIG. 15.

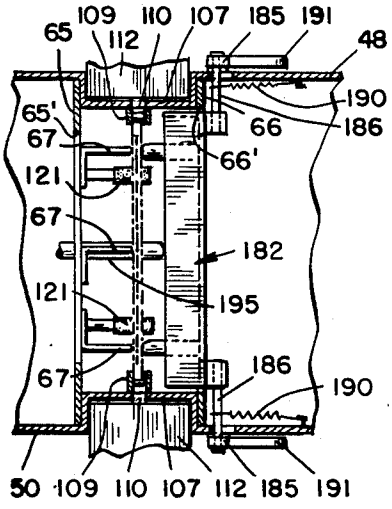

INVENTOR

LOUIS J. MISURACA

BY

Mason & Graham

ATTORNEYS

Sept. 1, 1964 L. J. MISURACA 3,146,666

AUTOMATIC SLIDE PROJECTOR

Filed March 20, 1958

8 Sheets-Sheet 8

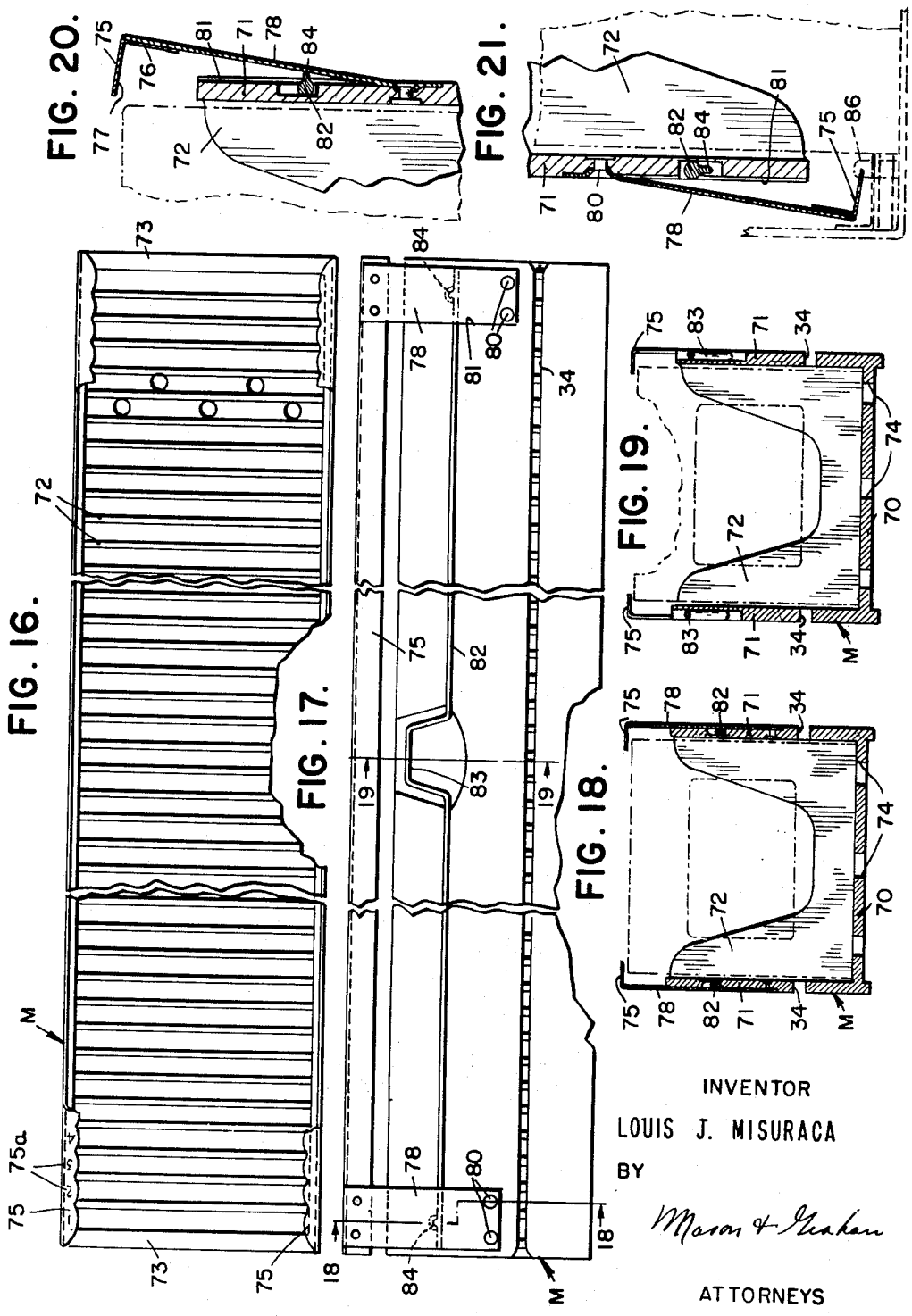

INVENTOR

LOUIS J. MISURACA

BY

Mason & Graham

ATTORNEYS

United States Patent Office 3,146,666 Patented Sept. 1, 1964

3,146,666

AUTOMATIC SLIDE PROJECTOR

Louis J. Misuraca, Glendale, Calif., assignor, by mesne assignments, to Angus Incorporated, a corporation of Delaware

Filed Mar. 20, 1958, Ser. No. 723,623
20 Claims. (Cl. 88—28)

This invention has to do with photographic slide projectors.

An object of my invention is to provide a novel and improved fully automatic photographic slide projector having new and desirable features.

Heretofore various automatic or semiautomatic slide projectors have been devised, but so far as I know, they have one or more of the following divadvantages: the slide transport mechanism tends to jam if it encounters a slide with a damaged or distorted frame; the slide transport mechanism tends to damage the slide mounts or frames; the projectors require manual focusing each time a slide mount of different thickness is projected; the projectors tend to cause "popping" of the slides which become hot during projection with consequent distortion of the projected image; no means is provided to vary the period of projection nor can the automatic cycle of projection be interrupted manually without disturbing the automatic functioning; and, the devices are unduly complex and cannot be manufactured economically.

Thereore, it is a particular object of my invention to provide a fully automatic slide projector which does not have the above-noted disadvantages.

A further object is to provide an automatic slide projector which utilizes a single motor for operating the blower, the slide-changing mechanism and all other power-operated parts.

Another object is to provide a novel slide projector in which only a single magazine is used, the slides being successively removed from and returned to the magazine during automatic, or semiautomatic operation of the machine. A further object is to provide such a device wherein the magazine is inserted in the projector inverted, thus allowing the slides to be originally placed rightside up in the magazine and yet have the projected images, which are inverted by projection, appear rightside up on the screen.

Another object is to provide a device in which the slides are fed by gravity to positions for projection, and in which the slides are returned to the magazine by means which places no strain or stress on the slide mounts.

Still another object is to provide in a slide projector means for securely holding the individual slide in proper position for projection without subjecting the slide to liability of damage.

A further object is to provide an improved means for automatically adjusting an objective or lens element to compensate for the thickness of a particular slide frame or mount thereby to achieve automatic focusing for slide mounts of different thicknesses.

Another object is to provide novel means for cyclically projecting successive slides and to provide means for varying the period of projection of the slides. In this connection it is an object to provide manual control means for rejecting or cutting short the period of projection of any slide while the machine is operating automatically without interfering with subsequent automatic cyclic projection. Still another object is to provide means to permit advancing the slide magazine to a selected point to preclude projection of an unwanted group of slides and also to permit returning to previously shown slides without difficulty.

A further object is to provide a novel arrangement

for cooling the lamp and the slide being projected and the portion of the machine immediately in the region of the slide being projected as well as means for automatically preheating slides prior to projection thereof.

Still another object is to provide an automatic slide projector in which the parts are easily accessible and in which certain parts are carried upon a removable casing and the majority of the other parts are carried upon a base to which access is accomplished by removal of the casing. A further object in this connection is to provide a unitized construction in which the device is separable into a plurality of subassemblies for ease of manufacture.

A further object is to provide a device in which most of the parts are readily manufactured by inexpensive, mass production methods.

These and other objects will be apparent from the drawings and the following description. Referring to the drawings:

FIG. 1 is a side elevational view, partly broken away, showing a projector embodying the invention;

FIG. 1A is a fragmentary plan view on line **1A—1A** of FIG. 1;

FIG. 2 is a longitudinal sectional view in the plane of line **2—2** of FIG. 3;

FIG. 3 is a fragmentary cross-sectional view on line **3—3** of FIG. 1;

FIG. 4 is a fragmentary sectional plan view on line **4—4** of FIG. 1;

FIG. 5 is an enlarged fragmentary sectional view on line **5—5** of FIG. 1 but on a larger scale the view being partly brkoen away;

FIG. 6 is an enlarged fragmentary sectional view on line **6—6** of FIG. 5;

FIG. 7 is an enlarged fragmentary sectional view on line **7—7** of FIG. 1;

FIG. 8 is a fragmentary sectional view on line **8—8** of FIG. 7;

FIG. 9 is an enlarged fragmentary sectional view on line **9—9** of FIG. 7;

FIG. 10 is an enlarged fragmentary view on line **10—10** of FIG. 8;

FIG. 11 is a fragmentary enlarged plan view of the forward end of the magazine carrier;

FIG. 12 is a fragmentary sectional view on line **12—12** of FIG. 11;

FIG. 13 is a fragmentary sectional view on line **13—13** of FIGS. 1 and 14;

FIG. 14 is a sectional view on line **14—14** of FIG. 13;

FIG. 15 is a sectional view on line **15—15** of FIG. 14;

FIG. 16 is a plan view of a magazine;

FIG. 17 is a side elevational view of the magazine of FIG. 16;

FIGS. 18 and 19 are cross-sectional views on lines **18—18** and **19—19** of FIG. 17, respectively;

FIG. 20 is an enlarged fragmentary sectional view on line **20—20** of FIG. 17 with the parts in a different position;

FIG. 21 is an enlarged fragmentary sectional view of an inverted magazine as the same appears when in the projector adjacent the slide chute.

More particularly describing the invention, **11** designates a base comprised of a box-like open-topped member **12** in which is mounted a base plate **14**. The various components of the projector are mounted on the base plate **14**, and I contemplate that a suitable cover **15**, shown in broken lines, may be detachably secured to the base **11** for the purpose of enclosing the projector when it is not in use.

I provide a casing or housing, generally designated **17**, which is detachably secured to the base plate **14** by screws **18** extending through a mounting flange **19** of the housing.

The casing 17 carries the forward lens assembly or objective, designated 21. The forward wall 22 of the casing has a forwardly projecting, internally cylindrical boss 23 in which is slidably mounted a sleeve 24 which is biased inwardly of the casing by a spring spider plate 25 which bears against the inner surface of wall 22 and a flange 24' on the sleeve. The lens elements are mounted in the barrel 27, the latter being manually adjustable in the sleeve 24 in a conventional manner. It will be apparent, therefore, that the sleeve and lens barrel are mounted for limited axial movement and are yieldably urged inwardly of the casing. As will later appear, this is to permit of the lens barrel being adjusted by an automatic focusing means.

Casing 17 also carries a magazine carrier 30 which receives a slide magazine M having a body 30' (FIGURE 6). The carrier comprises a trough-like member of metal or other suitable material which has a floor 31 and side walls 32. The latter terminate in opposed, inwardly projecting flanges 33 to support the magazine which has longitudinal grooves 34 in its side walls to receive the flanges 33. The casing is apertured at 37 and 38 to provide access to the carrier, the forward opening also accommodating the forward end of the carrier which projects beyond the casing.

At the forward end of the carrier I provide an extension 36 (FIG. 11) mounted on two track members 35. Pins 36' connect the parts and slots 35' permit the extension of the member 36 to the position shown by broken lines in FIG. 1. The parts 35 and 36 serve to elevate the slides into the magazine in position to be held by the slide retainers of the magazine when the retainers return to normal position.

Substantially all the remainder of the device including controls and wiring are mounted on or under base plate 14 and remain in place when the casing 17 is removed. The base plate 14 is provided with an elongated opening 13 to accommodate certain portions of the apparatus which project through this into the space 35' in the base member 12.

To better understand the apparatus, it may bestated in a general way that a magazine M containing the slides to be projected is inserted, inverted, in the carrier 30 and the slides therein are successively removed from the magazine and returned thereto. After the return of a slide the magazine is advanced. The slides move by gravity through a slot 39 into and down a chute 40 into place in front of a lens group or assembly 41 for projection. The slot 39 is normally closed by a gate 42 which is opened at the proper time. After a slide has moved to proper position it is held by means which adjusts the forward lens assembly to focus the same and compensate for any difference in thickness of various slides. Behind the lens group 41 is a conventional lamp 43 and behind this a reflector 44. I also provide a blower 45 which is driven by a motor 46. The chute 40 is disposed between two main frame walls, designated 48 and 50. A blower housing 51 surrounds the blower wheel and extends forwardly, being joined to partition walls 52 and 53 which define the lamp chamber 54. A shelf 55 between walls 48 and 50 supports a lamp socket 57. Air from the blower passes through the lamp chamber 54 and then upwardly through openings 58 in the floor 31 of the magazine carrier 30. A portion of the air from the blower is diverted by a passage 60 which runs beneath shelf 55 and is formed by the walls 61 and 62, the air passing to the lower end of the chute 40 through which the air passes upwardly to cool the chute and the slide therein being projected.

The chute 40 is formed by a forward wall 65 and a rear wall 66 and by vertically extending laterally spaced inwardly projecting guide members 67 on these walls, the guide members having a space between their inner edges of sufficient width to accommodate a slide. The guide members are shown as angle metal members which can be secured to the walls by spot-welding or other means. The walls 65 and 66 are apertured at 65' and 66', respectively, about the optical axis of the projector.

Referring now to FIGS. 16–21, which illustrate a preferred form of magazine, this comprises an apertured bottom wall 70, corresponding side walls 71 and evenly spaced, laterally extending partitions 72 which form pockets for receiving the individual slides. The magazine also has end walls 73 which are substantially rectangular.

On each side wall I provide a flexible slide retainer 75 which may be made of metal and which runs the entire length of the magazine. Each member 75 has a side section 76 and an inwardly disposed scalloped flange 77. The side sections are supported, respectively, on a pair of flat, spring metal brackets 78 attached by rivets 80 or other means to the side walls of the magazine body. The brackets normally lie against the sides of the magazine in recesses 81. However, to insert or remove slides it is necessary to move the slide retainers outwardly as shown in FIGS. 20 and 21. This may be accomplished manually by rotating a rod 82 which has a central crank 83, the ends of the bar being provided with eccentric end portions 84 beneath the brackets 78. The rod is recessed into the side walls of the magazine.

When the slide magazine is inserted in the projector the slide retainers are cammed out automatically in the region of the slot 39 by two pair of pins 86 as best shown in FIGS. 6 and 21. These pins also serve as an indexing means in conjunction with the scalloped edges of the flanges 76. When the magazine is first inserted in the guide it is properly oriented by moving it forward until it strikes a manually operable stop pin 89 which is normally held retracted by spring 90 in mounting 91.

It will be apparent from the description thus far that when the magazine is inserted in the projector the slides therein will drop out of the magazine and rest upon the floor 31 of the carrier. Due to the flexibility and resilience of the slide retainers 75, when these are cammed out at the forward end only of the magazine they may not move out throughout their entire length. Lateral guides 94 are provided adjacent the pins to center the slides as they are advanced toward the slot 39. Also, springs 96 are provided, one at each side of the carrier, to insure proper orienting of the slider relative to the slot 39 in the floor of the carrier.

Referring now to the slide transport mechanism, the motor 46 drives the blower shaft 100 and at the end of this I provide a pinion 101. The latter drives a train of gears, generally deseignated 102, which intermittently engages and operates two arms, designated 104 and 105. The arms are each fixedly secured to a shaft 106 which is journaled in the frame walls 48 and 50. A tie bar 106' connects the arms at the end. The free ends of the arms extend to the region of the chute where walls 48 and 50 are each formed to provide a vertical outer channel 107. On the inside of the walls 48 and 50 I provide inner channels 109. The parts are slotted to provide the elongated slots 110. Slide-engaging blocks 111 ride in the inner channels and guide blocks 112 ride in the outer channels. A pin 114 is mounted in each block 111, passes outwardly through outer block 112, and has its outer end received in an oversize slot 115 in the end of the adjacent arm. The pins rest on springs 116 on the arms. As the arms 104 and 105 are moved upwardly by means which will later be described, a spring 118 on each of the arms engages the edge of the gate 42 and moves it laterally edgewise out of the way toward the rear of the projector against a pair of springs 120 which yieldably urge the gate closed. Assuming there is a slide upon the gate, this then is free to move down into the chute where it is received or caught by the slide-engaging blocks 111. Upon downward movement of these members the slide is lowered into position to rest upon two supports 121.

The mechanism for moving the arms periodically up

and down is best shown in FIGS. 1, 4, 7, 8, 9, and 10. This means comprises a gear 125 which meshes with pinion 101 on shaft 100. Gear 125 is rotatably mounted upon a stub shaft 126 carried on support 127. The gear has an integral pinion 128 which meshes with a gear 130 rotatably mounted upon a stub shaft 131 which is carried upon support 127. Gear 130 has an integral pinion 132 which drives a timing gear 134. The timing gear is provided one face with a plurality of circumferential rows of pins. Each row has a different number of pins 135 evenly spaced circumferentially of the wheel for a purpose to be described.

I also provide a crank disk 136 which is rotatively mounted upon shaft 131, and this carries a crank pin 137 which is received in a slot 138 in adjacent arm 104 to drive the arms when the disk rotates.

The crank disk is driven by gear wheel 130 through a clutch means comprising an axially slidable clutch pin 140 carried by the crank disk hub and biased toward the gear wheel by a spring 141. A beveled finger 142 on a pivoted clutch lever 143 engages a beveled portion 140' of element 140 when the parts are in the position shown in the drawing and serves to hold the pin element out of engagement with the gear wheel 130. The latter has several notches 130' in its hub for reception of the pin. A spring 144 (FIG. 1) yieldably holds the clutch lever in the position shown in FIGS. 8 and 10.

The clutch means is normally operated intermittently by the following means. Lever 143 is fixed to a shaft 145 journaled in brackets 146 and 147. Also, fixed to shaft 145 is a segment 148 having a notched arcuate edge 149. Associated with the latter is a timing lever 150 having a portion 151 rotatively mounted on shaft 145. Member 150 has two arms, 152, 153. The first of these has a flat, laterally extending end 154 adapted to be actuated by the pins 135 in a selected row of pins on the timing gear. Arm 153 is adjustably positionable in engagement with segment 148, carrying a detent 156 for engagement with a selected notch in segment 148. The arm 152 thus may be adjusted so as to be actuated by a selected row of pins on the timing gear, or it may be moved to a position where it will not be actuated by the timing gear. It will be apparent that as the gears rotate, the timing gears, which rotates relatively slowly, operates the timing lever, pivoting it each time it is struck by one of the pins on the timing gear. This moves the clutch lever with its finger out of the path of clutch pin 140 on the crank disk, permitting the pin to engage gear wheel 130 so that the crank disk is thereby rotated. The crank disk makes only one revolution by reason of the fact that the pin engaging the timing lever releases the lever before the crank disk can make one complete revolution and, as a result, the finger is in position to disengage the clutch pin when it strikes it after having made one revolution. The clutch may also be operated manually by depressing a button 158 which serves to in turn depress an extension arm 159 of segment 148. An end portion 159' is provided for remote manual operation by a flexible shaft on cable 161 as shown in FIG. 1.

It will be apparent that each time the crank disk revolves it raises and lowers the arms. The crank disk also functions to operate magazine-advancing means and for this purpose the crank disk carries a striker member 162 at its periphery (FIG. 1) which strikes and pivots a magazine-advancing lever 163 pivotally mounted at 164. The upper end of the lever is pivotally attached to a rod 166 which is biased toward the rear of the projector by a spring 167. The forward end 168 of the rod (FIGS. 5 and 6) is upturned and passes through a slot 170 in a slotted plate 172 which is mounted for limited movement on flange 33 of one magazine carrier wall 32. Above the plate 172 the rod is enlarged to retain it. A pawl 174 is pivotally mounted on the plate and is urged into engagement with a pair of magazine partition walls by a spring 175, the pawl being received in the magazine groove 34. With rod 166 retracted the pawl is free to pivot outwardly to permit movement of the magazine independently of the pawl. When rod 166 is actuated, the end 168 thereof transverses slot 170 and abuts shoulder 178 on the pawl moving the pawl and plate 172 forward and holding the pawl in engagement with the magazine, advancing the latter to bring the next slide pocket into place over the gate. Spring 167 serves to retract the parts.

I also provide means for holding a slide in position to be projected, and this comprises a pressure plate 182 having four forwardly projecting pins 183 adapted to engage the marginal portion or frame of a slide which has been lowered into position for projection. The pressure plate is pivotally mounted upon and between a pair of levers 185 (FIGS. 13, 14, 15) upon stud shafts 186 and the levers in turn are pivotally hung at 187 on the walls 48 and 50, respectively. Springs 190 serve to urge the pressure plate away from the center of the chute so as to permit insertion and removal of slides. Each lever 185 carries a leaf spring 191 at its lower end the shape of which is best shown in FIG. 14. As the arms 104 and 105 descend, rollers 193 on the arms engage these springs and cam them forward thereby yieldably urging the levers and pressure plate into resilient engagement with the rear of the slide, the rollers finally coming to rest in a recessed portion 194 at the lower ends of the springs.

One of the features of the invention is the means for automatic focusing to adjustably compensate for slides having frames of different thicknesses. This means includes a pin 195 mounted for axial movement with its inner end against the pressure plate. The outer end of the pin engages a cam 196 pivotally mounted at 197 on a shelf 198. The cam is engaged by the rear edge of the sleeve 24 of the forward lens assembly. The shape of the cam is carefully proportioned to bring about proper adjustment of the lens for different-sized thicknesses of the slides.

In order to mask the slide-changing movements I provide a shutter 200 which is pivotally mounted at 201 (FIG. 3). The shutter is fitted with a spring 203 which serves to hold it past center in either broken-line position shown in FIG. 3. A tail portion 205 of the shutter is in the path of downward return movement of a finger 206 on the end of arm 104 (FIGS. 1, 4). On upward movement, the finger strikes the body of the shutter.

I also provide means which makes it possible to advance the slide magazine manually any desired distance. This comprises an auxiliary clutch lever 208 having a finger 209 which is movable into position to retract the clutch pin 140 after the crank disk has rotated about one-half revolution. The lever is mounted on a shaft 211 which has a handle 212 at its outer end for convenient manipulation. By first setting lever 208 and then pressing the button 158 to engage the clutch, the arms 104 and 105 will be stopped in their upper position, a position in which the last-removed slide will be returned to its pocket in the magazine. The magazine then may be advanced (or retracted) as far as desired. Return of lever 208 will then again engage the clutch and the arms will move down and bring the next slide into position for projection.

In the operation of the device the magazine M filled with slides is inserted in the carrier 30 in inverted position and moved forward until it is in proper position with the first slide compartment or pocket one septum behind the slot 39 above the chute. The stop pin 89 may be pressed inwardly to limit forward movement of the magazine to correctly position it when inserting it. For automatic operation, the timing lever is then positioned so it will be engaged by a selected row of pins on the timing gear. Each time a pin on the timing gear engages the timing lever the clutch means is engaged to drive the crank disk which in turn raises and subsequently lowers the arms 104 and 105, the crank disk making one complete revolution before the clutch means is disengaged.

As the arms raise they move the shutter into place to interrupt the light beam and subsequently open the gate to permit the slide thereon to move through the slot onto the slide-supporting blocks. Also, while the arms are up, the magazine is advanced. In this connection it should be noted that the oversize slots 115 and springs 116 of the arms results in the slide-engaging blocks remaining stationary in their upper position while the crank disk rotates through several degrees thereby allowing sufficient time for advancing the magazine after a slide has been returned to the magazine after projection. As the arms move down they lower the slide into position on the slide supports and thereafter cause the pressure plate to engage and hold the slide. The pressure plate, in turn, operates the automatic focusing mechanism to compensate for any differences in thickness of slides. Of course when the first slide is projected it is necessary to manually focus the forward lens assembly to compensate for lens-to-screen distance.

The next time and each succeeding time that the arms are raised the pressure plate is first released after which the slide-supporting blocks engage the slide and carry it up to return it to its own pocket in the magazine. After this has been accomplished, and while the arms are still up, the magazine-advancing means comes into operation, to move the magazine one pocket forward and bring the next succeeding slide into position over the slot to the chute. As previously pointed out, any slide may be projected manually during automatic operation. Also, by moving the timing lever out of position to be struck by any of the pins on the timing gear, the machine may be operated semiautomatically by the operator depressing the manual control button at any desired intervals or this may also be done during any automatic timing sequence.

During operation of the projector, air from the blower is passed through the chute and lamp chamber and enters the magazine guide. A portion of the air passes through the magazine thereby preheating the slides therein prior to projection, thereby eliminating objectionable "popping" thereof during projection. The air entering the magazine passes between the slides and escapes through the apertured bottom wall of the magazine. The casing is provided with slots 17*a* to facilitate escape of this air from the casing.

It will be apparent that a desirable feature of the invention is the fact that the slides are inserted in the magazine erect, or rightside up. This is made possible by the fact that the magazine is inverted when place in the projector.

If desired, the magazine may have indicia on its bottom wall designating the numbers of the slide pockets therein, and an opening 17*b* is provided in the casing above the slot leading to the chute for the purpose of viewing such indicia.

While I have shown and described a preferred form of my invention, I contemplate that various changes and modifications can be made therein without departing from the invention, the scope of which is indicated by the following claims.

I claim:

1. In a photographic slide projector, means for projecting light along a substantially horizontal axis, slide supply-receiving means extending substantially parallel to and located above said optical axis for holding a supply of slides, an upright slide chute leading from the slide supply-receiving means and intersecting said optical axis, a pair of laterally spaced parallel arms, means supporting said arms for limited pivotal movement about a horizontal axis spaced from the chute, said arms extending to a region adjacent the side edges of the chute, vertically movable slide-engaging means in said chute, means operatively connecting said slide-engaging means to adjacent portions of said arms, means for raising said arms from a low position below said optical axis to a high position above said optical axis and adjacent the slide supply-receiving means and for returning said arms to said low position, and means in the chute at the optical axis for intercepting the slide being lowered and supporting it in projection position.

2. In a photographic slide projector, means for projecting light along a substantially horizontal axis, slide supply-receiving means extending substantially parallel to and located above said optical axis for holding a supply of slides, an upright slide chute leading from the slide supply-receiving means and intersecting said optical axis, a pair of fixedly connected laterally spaced parallel arms, means pivotally supporting said arms about a horizontal axis spaced from said chute, said arms extending to a region adjacent the side edges of the chute, vertically movable slide-engaging means in said chute, means operatively connecting said slide-engaging means to adjacent portions of said arms, means for raising said arms from low position below said optical axis to a high position above said optical axis and adjacent the slide supply-receiving means and for returning said arms to said low position, a gate normally closing the upper end of said chute, means in the chute for intercepting a slide being lowered and supporting it in projection position, and interengaging means on said gate and said arms for opening said gate as said arms rise.

3. A slide projector as set forth in claim 2 in which means is provided to limit upward movement of said slide-engaging means short of the height reachable by said arms and in which the means operatively connecting said arms and said slide-engaging means provides a resilient lost-motion connection.

4. In a photographic slide projector, means for projecting light along a substantially horizontal axis, slide supply-receiving means extending substantially parallel to and located above said optical axis for holding a supply of slides, an upright slide chute leading from the slide supply-receiving means and intersecting said optical axis, a pair of fixedly connected laterally spaced parallel arms, means pivotally supporting said arms about a horizontal axis spaced from said chute, said arms extending to a region adjacent the side edges of the chute, a vertically movable slide-engaging block in said chute at each side edge thereof, the portion of each arm adjacent said chute having a slot therein, a pin projecting from each block and extending into the slot in the adjacent arm, said chute being slotted at each side edge to permit of vertical movement of said pins, means for raising said arms from a low position below said optical axis to a high position above said optical axis and adjacent the slide supply-receiving means and for returning said arms to said low position, and means in the chute for intercepting a slide being lowered and supporting it in projection position.

5. A photographic slide projector as set forth in claim 4 in which the pin-receiving slots in said arms are substantially wider than the diameter of the pins and in which each arm has a spring normally yieldably supporting the pin above the lower edge of the slot.

6. In a photographic slide projector, means for projecting light along a substantially horizontal axis, slide supply-receiving means extending substantially parallel to and located above said optical axis for holding a supply of slides, an upright slide chute leading from the supply-receiving means and intersecting said optical axis, a pair of fixedly connected parallel arms, means pivotally supporting said arms at one end thereof about a horizontal axis with their free ends adjacent the side edges of the chute, respectively, vertically movable slide-engaging means in said chute, means operatively connecting said slide-engaging means to the free ends of said arms, said arms normally being in a low position with their free ends below said optical axis, a motor, crank means connected to one of said arms effective, when rotated, to raise and lower said arms, means in the chute for intercepting a slide being lowered and supporting it in projection position independently of said slide engag-

ing means, and clutch means between said crank means and said motor.

7. In a photographic slide projector, means for projecting light along a substantially horizontal axis, slide supply-receiving means extending substantially parallel to and located above said optical axis for holding a supply of slides, an upright slide chute leading from the slide supply-receiving means and intersecting said optical axis, a pair of fixedly connected parallel arms, means pivotally supporting said arms at one end thereof about a horizontal axis with their free ends adjacent the side edges of the chute, respectively, vertically movable slide-engaging means in said chute, means operatively connecting said slide-engaging means to the free ends of said arms, said arms normally being in a low position with their free ends below said optical axis, a motor, crank means connected to one of said arms effective, when rotated, to raise and lower said arms, means fixed in the chute for intercepting a slide being lowered and supporting it in slide projection position, a normally disengaged clutch between said crank means and said motor, and timing means driven by said motor for periodically engaging said clutch.

8. In a photographic slide projector, means for projecting light along a substantially horizontal axis, slide supply-receiving means extending substantially parallel to and located above said optical axis for holding a supply of slides, an upright slide chute leading from the slide supply-receiving means and intersecting said optical axis, a slide support for holding a slide in the chute at the proper height for projection, a pressure plate behind said chute mounted for movement to engage the rear surface of the slide mount of a slide on said slide support, yieldable means urging said pressure plate rearwardly out of engagement with a slide in the chute, a pair of fixedly connected parallel arms, means pivotally supporting said arms at one end thereof about a horizontal axis with their free ends adjacent the side edges of the chute, respectively, vertically movable slide-engaging means in said chute, means operatively connecting said slide-engaging means to the free ends of said arms, motor-driven means for periodically raising said arms from a low position below said optical axis to a high position above said optical axis and adjacent the slide supply-receiving means and for returning said arms to said low position, the slide being lowered being intercepted by said support, and pressure plate-engaging means on said arms operable to yieldably urge said pressure plate forward into engagement with a slide on said support when said arms are in low position.

9. In a photographic slide projector having means for projecting light along a substantially horizontal optical axis, means forming a slide magazine carrier above and substantially parallel to said optical axis, an upright slide chute leading from said carrier and intersecting said optical axis, said carrier being adapted to receive an inverted, open-topped magazine containing slides, a pair of fixedly connected parallel arms, means pivotally supporting said arms at one end thereof about a horizontal axis with their free ends adjacent the side edges of the chute, vertically movable slide-engaging means in said chute, means operatively connecting said slide-engaging means to the free ends of said arms, a slide intercepting support in the chute at said optical axis, a crank disk adjacent one of said arms mounted for rotation about an axis parallel to the pivotal axis of said arms, a crank pin on said disk, the arm adjacent said disk having a slot receiving said pin, a motor, and drive means including a clutch connecting said crank disk for rotation by said motor.

10. A photographic projector as set forth in claim 9 in which means is provided for synchronously advancing said magazine after a slide has been returned to the magazine and in which said crank disk operates said means for advancing the magazine.

11. In a photographic slide projector having means for projecting light along a substantially horizontal optical axis, means forming a slide magazine carrier above and substantially parallel to said optical axis, said carrier having a floor with a transverse slot, an upright slide chute below said slot and intersecting said optical axis, said carrier receiving an inverted open-topped magazine containing slides and having laterally flexible slide-retaining elements along its upper side margins normally retaining slides in the magazine when the magazine is inverted, means for automatically intermittently shifting said magazine along said carrier to successively align the slides with said slot, and means on said carrier in the region of said slot for moving said magazine slide-retaining elements laterally outward when the magazine is inserted in the carrier and as it is advanced therein whereby to permit of the slides in said magazine to partially leave said magazine and rest upon the floor of said carrier.

12. Means for supporting slides and transporting the same to and from viewing position comprising, in combination; an elongated tray having a rectangular cross-section, open at one side, partially open at the opposite side, and having means to hold slides in spaced relation for movement from and to the tray through said one side; slide retaining means mounted on said tray for movement into and out of retaining position overlying portions of said slides in said tray to prevent removal of said slides, spring means biasing said retaining means into said position, means for receiving said tray having means cooperating with said retaining means on insertion of said tray to move said retaining means out of said slide retaining position, and means for indexing said tray while said retaining means is held out of said slide retaining position.

13. Means for supporting slides and transporting the same to and from viewing position comprising, in combination; an elongated tray having a rectangular cross-section, open at one side, partially open at the opposite side, and having means to hold slides in spaced relation for movement from and to the tray through said one side; a slide retaining lip extending longitudinally of said tray and mounted for transverse movement into and out of retaining position overlying portions of said slides in said tray to prevent removal of said slides, spring means biasing said slide retaining lip into said position, and means for receiving said tray and having means cooperable with said lip transversely thereof to move the same out of said retaining position to clear said slides, and means for indexing said tray while said lip is held out of slide retaining position.

14. A slide carrying tray comprising, in combination; an elongated tray having a rectangular cross-section, open at one side, and having means to hold slides in spaced relation for movement from and to the tray through said one side; and slide retaining means mounted on said tray for movement into and out of retaining position overlying portions of slides in said tray to prevent removal of said slides, spring means biasing said retaining means into said position, said retaining means being engageable with a cooperating part of a slide changing means on which said tray is mounted to position said retaining means out of said retaining position.

15. A slide carrying tray comprising, in combination; an elongated tray having a rectangular cross-section, open at one side, and having means to hold slides in spaced relation for movement from and to the tray through said side; and a slide retaining lip extending longitudinally of said tray and mounted thereon for transverse movement into and out of retaining position overlying portions of said slides in said tray to prevent removal of said slides, spring means biasing said retaining means into said position, said lip having a longitudinally extending surface slidably engageable with a relatively stationary cooperating part of a slide changing

means on which said tray is mounted for longitudinal movement to position said lip out of said retaining position.

16. In a photographic slide projector having a casing and means for projecting light along a substantially horizontal axis, means providing a slide magazine carrier above said optical axis, a slide supporting bottom wall on said carrier, an upright slide chute leading from said carrier and intersecting said optical axis, said carrier receiving a magazine containing slides and said magazine having an opening through which slides can be dropped from the magazine, means mounting in said chute vertically reciprocable slide-engaging carrier means upon which a slide bears as the slide is moved from and to said magazine along said chute, means defining a slide ejection opening in said wall at the upper end of said chute, a normally closed shiftable gate for said slide ejection opening, means for synchronously automatically intermittently reciprocating said slide carrier means in said chute, and means for operating said gate in timed relation with movement of said slide carrier means for opening said gate to permit passage of a slide into and out of said chute as said slide carrier means moves a slide from and to said magazine and for closing said gate at least when the slide is at the lower part of said chute opposite said optical axis.

17. In the photographic slide projector defined in claim 16, said gate opening and closing means comprising cooperating interengaging means on said slide carrier means and said gate.

18. In a photographic slide projector having means for projecting light along an optical axis through a projection aperture, a compartmented slide magazine open along the bottom side thereof when supported on the projector, slide retainer means carried by the magazine and shiftable with respect thereto, said retainer means normally extending over said bottom side to retain slides in the magazine compartments, means for movably mounting said magazine in the projector, means for periodically advancing said magazine a predetermined distance for successively locating each magazine compartment opposite a slide receiving and returning carrier mechanism in the projector, and means adjacent said

magazine mounting means for automatically effecting relative movement between said slide retainer means and said magazine to uncover at least the magazine compartment adjacent said mechanism as the magazine is advanced.

19. In the photographic slide projector defined in claim 18, said means for effecting said relative movement comprising means for shifting said retainer means.

20. In a photographic slide projector, means providing a magazine carrier for receiving a magazine containing photographic slides, said magazine having a bottom opening for removal and reinsertion of slides and said carrier having a bottom wall for supporting slides from the magazine in the carrier, said carrier being constructed and arranged to support a magazine in spaced relation above said wall, said bottom wall having a transverse slot for the passage therethrough of individual slides to a position therebelow for projection and for return of the slides into the magazine after projection, means for indexing said magazine forwardly after a slide has been returned thereinto, and means on the floor of said carrier forwardly of said slot for camming the slides that have been returned into the magazine upwardly to magazine height upon forward movement of the magazine and slides in said carrier.

References Cited in the file of this patent

UNITED STATES PATENTS

1,196,924	Bothwell	Sept. 5, 1916
2,401,506	Pechkranz	June 4, 1946
2,460,359	Page	Feb. 1, 1949
2,549,289	Cadwell et al.	Apr. 17, 1951
2,579,281	Tuck	Dec. 18, 1951
2,701,635	Mills	Feb. 8, 1955
2,784,817	Lessman	Mar. 12, 1957
2,854,888	Kaye	Oct. 7, 1958
2,871,760	Badalich	Feb. 13, 1959
2,898,807	Ewald	Aug. 11, 1959
2,938,288	Wallin	May 31, 1960
2,949,815	Rosenberger et al.	Aug. 23, 1960

FOREIGN PATENTS

608,164	Germany	Jan. 17, 1935

UNITED STATES PATENT OFFICE

CERTIFICATE OF CORRECTION

Patent No. 3,146,666 September 1, 1964

Louis J. Misuraca

It is hereby certified that error appears in the above numbered patent requiring correction and that the said Letters Patent should read as corrected below.

In the grant, lines 2 and 12, and in the heading to the printed specification, line 4, for "Angus Incorporated", each occurrence, read -- Argus Incorporated --; column 3, line 74, for "having" read -- leaving --; column 5, line 9, after "provided" insert -- on --.

Signed and sealed this 5th day of January 1965.

(SEAL)
Attest:

ERNEST W. SWIDER
Attesting Officer

EDWARD J. BRENNER
Commissioner of Patents