April 14, 1931. T. A. KEEN 1,800,864

CAR AND HOUSING

Filed Sept. 14, 1928 4 Sheets-Sheet 1

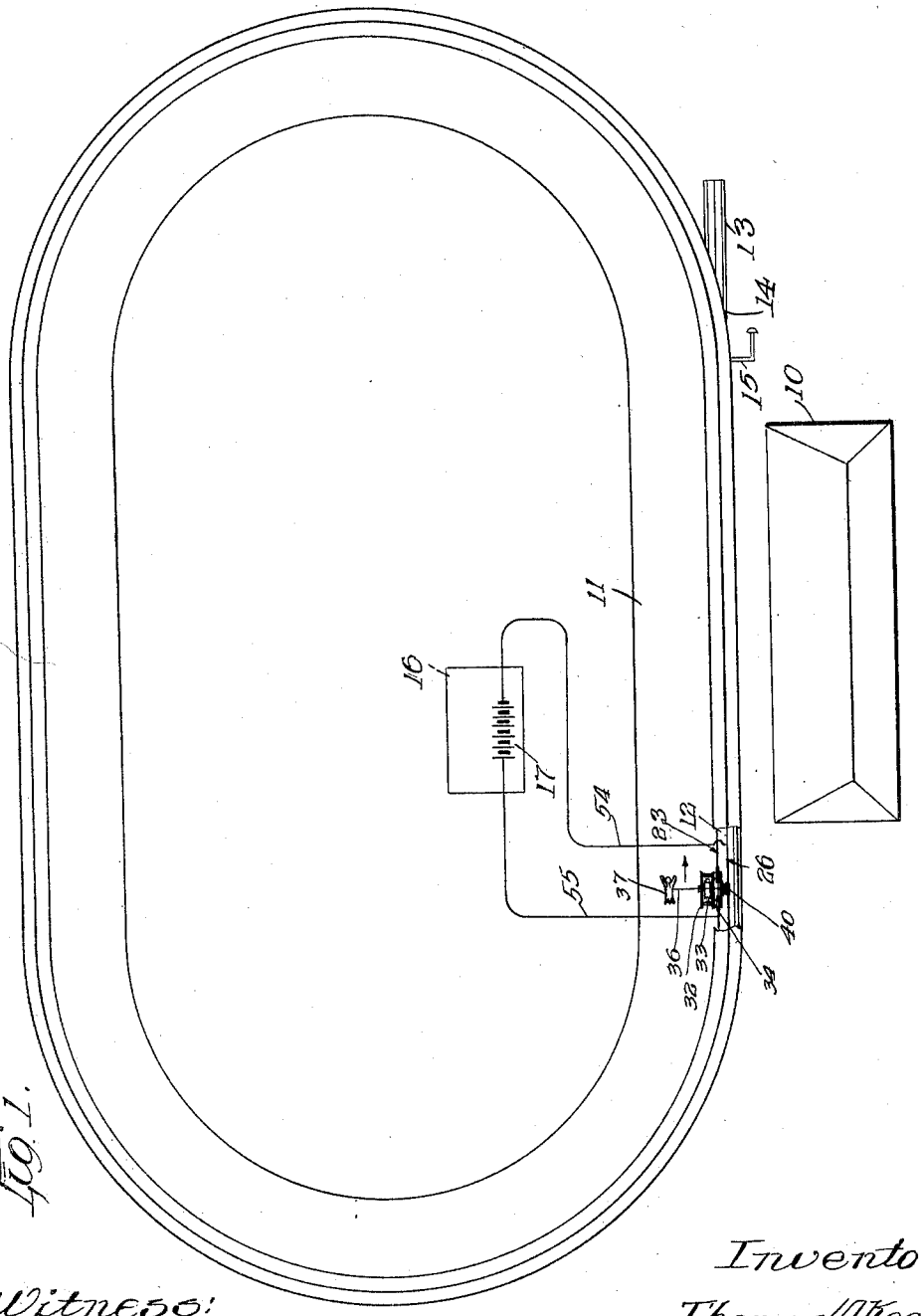

Fig. 1.

Witness:
Harry E. L. White.

Inventor:
Thomas A. Keen
By Dewey M. Lloyd Atty.

April 14, 1931. T. A. KEEN 1,800,864

CAR AND HOUSING

Filed Sept. 14, 1928 4 Sheets-Sheet 2

Fig. 6.

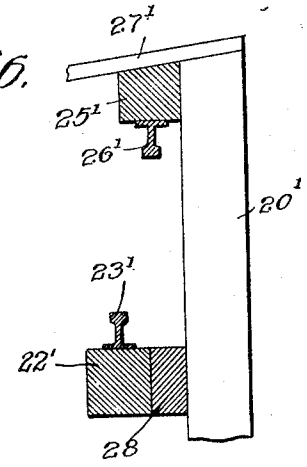

Fig. 2

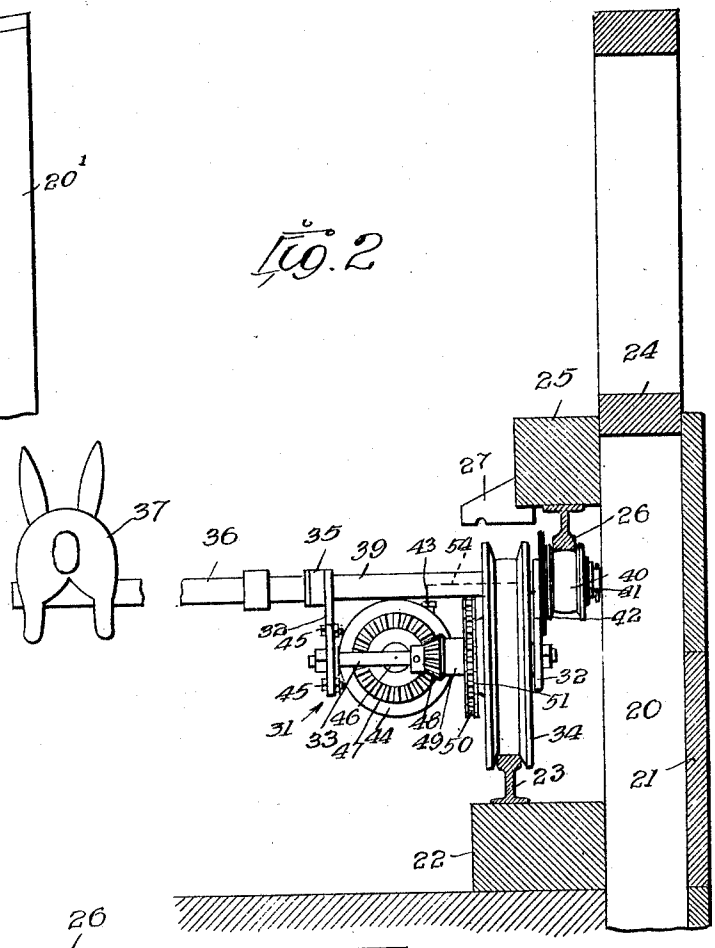

Fig. 3.

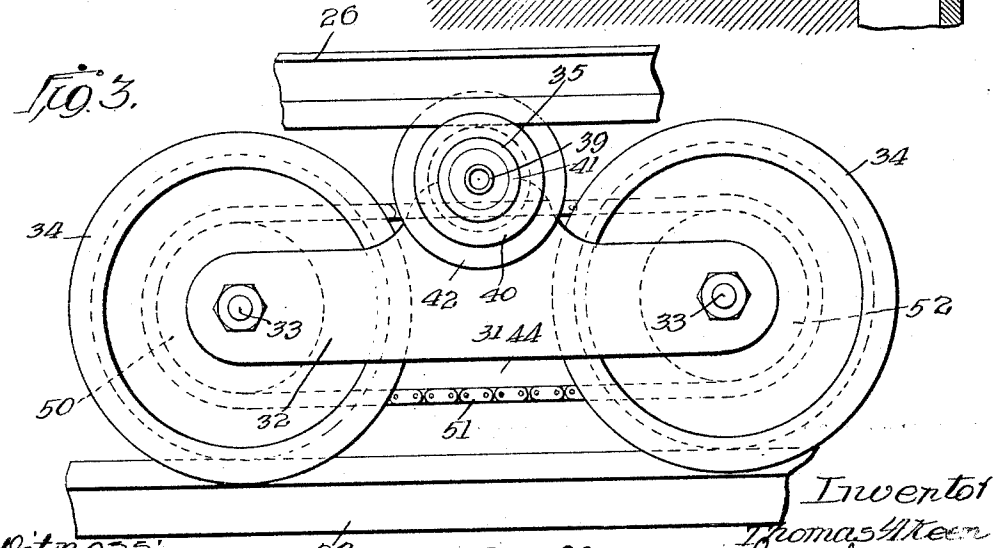

Witness:
Harry R. White

Inventor
Thomas A. Keen
By Clarence O'Brien
Attorney

April 14, 1931. T. A. KEEN 1,800,864

CAR AND HOUSING

Filed Sept. 14, 1928 4 Sheets-Sheet 3

Fig. 4.

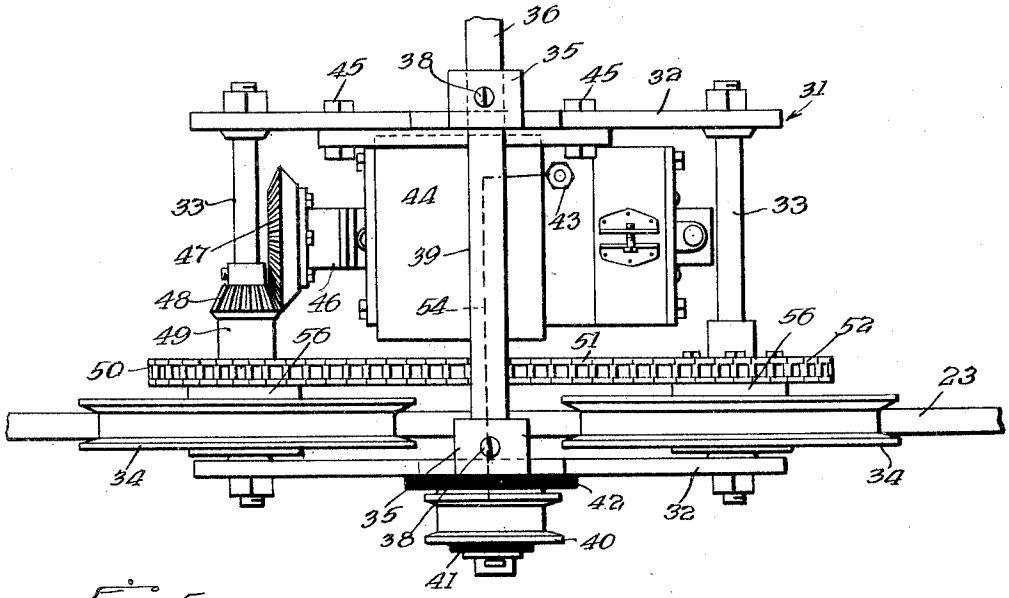

Fig. 5.

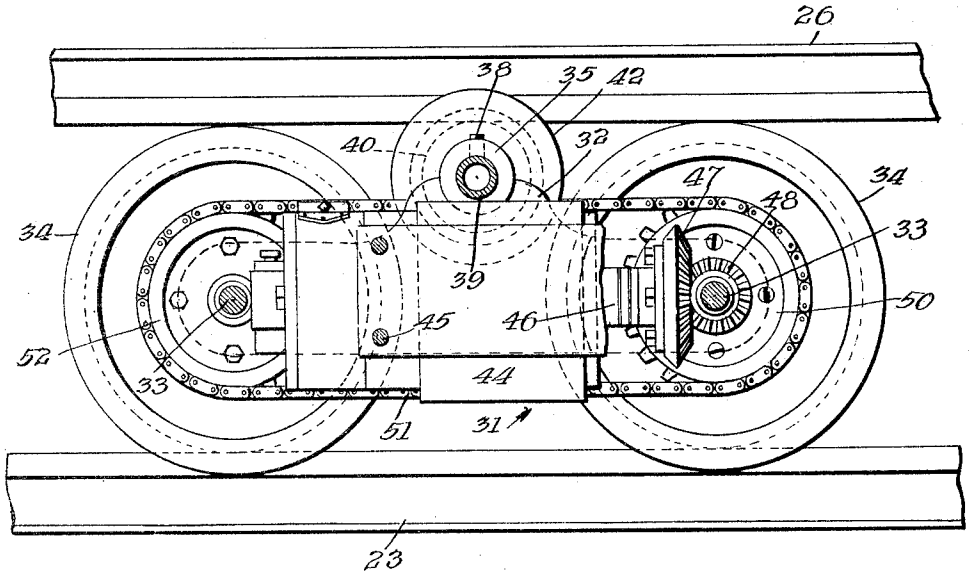

Witness:
Harry C. White

Inventor:
Thomas A. Keen.
By Clerk & Lloyd
Atty.

April 14, 1931. T. A. KEEN 1,800,864

CAR AND HOUSING

Filed Sept. 14, 1928 4 Sheets-Sheet 4

Fig. 7.

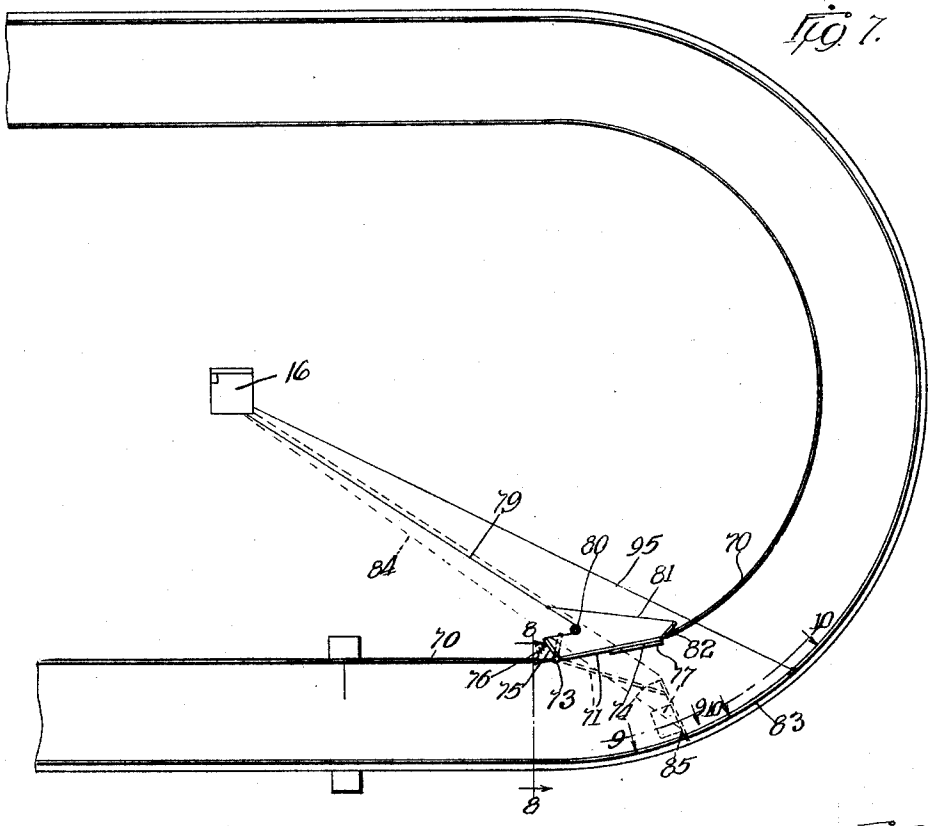

Fig. 8.

Fig. 9.

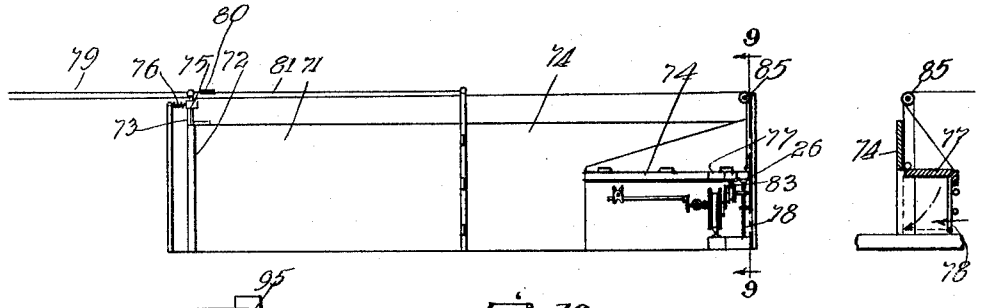

Fig. 10.

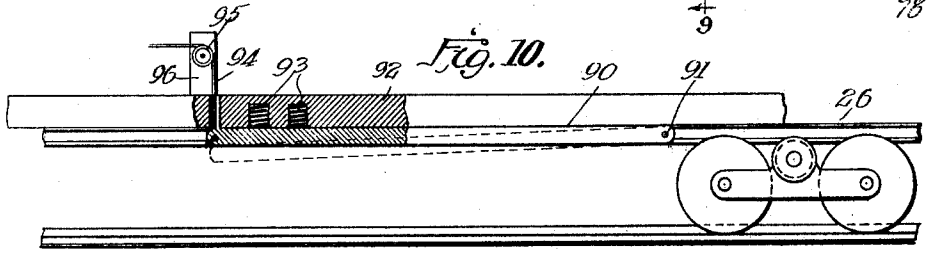

Witness:
Harry R. L. White

By

Inventor
Thomas A. Keen
Cleo M. Floyd Atty.

Patented Apr. 14, 1931 1,800,864

UNITED STATES PATENT OFFICE

THOMAS A. KEEN, OF BUTTE, MONTANA, ASSIGNOR TO HANNAH M. SMITH, OF CHICAGO, ILLINOIS

CAR AND HOUSING

Application filed September 14, 1928. Serial No. 305,956.

The present invention relates to dog racing tracks and to the equipment used in connection therewith, particularly to a means for propelling a mechanical hare and the housing and other elements used in association with such propelling means.

In the past, and at the present time, and until the discovery of the present invention, the means for propelling a mechanical hare in successfully operated tracks has generally comprised a car adapted to run upon two tracks, the whole car except for an arm carrying the hare being concealed within a housing. At one side of the housing there is a longitudinal opening, and through this opening the arm just referred to projected. At the end of the arm was the hare.

Such apparatus required special motors, for it is necessary to maintain the mechanical hare at a speed of about forty-five miles per hour. Field exciting batteries were required. Special and involved apparatus was necessary for braking the car when a race was completed, it being the proper and customary practice to carry the mechanical hare through an opening in the housing and out of sight of the pursuing hounds.

In addition to the great weight and considerable bulk which a hare-propelling car of this character possessed, the installation of a track using such apparatus was a relatively slow and tedious proposition. It was an expensive installation also in that it was necessary to excavate the entire circumference of the track, and it was also necessary to provide a housing of a most expensive construction, for all of the support therefor had to be adjacent the outer periphery of the track. With the bulk of the housing considered, this made a difficult task.

In the present type of track, the entire mechanism is greatly improved in that a much lighter hare propelling car is provided, a lesser current than is ordinarily required is used, the housing about the propelling car is simplified and its bulk reduced, and its installation made a relatively simple matter of short duration and which can be conducted at a very low cost. The control of the car may now be had from the center of the track, and the braking apparatus is relatively simple and requires no great length of track for the successful stopping of the car without undue jarring.

Further than that the height of the enclosing housing is much reduced so that greater visibility of the track may be had while the hare is making the course and the hounds following the hare. The objections to a high housing which sometimes obscured the vision is fully met by a new housing which in no way interferes with visibility of the hounds at any point on the track.

Having briefly outlined the present state of the art, and the improvements which are effected by the present invention, it is proper to recite the objects of the present invention, among which are the following provisions:

A new, improved, and lighter car for propelling a mechanical hare;

Simplified car construction whereby higher efficiency is had in the propulsion of a mechanical hare about a track;

A new arrangement of rails in relation to a car operating thereon producing a marked improvement in the behavior of a mechanical rabbit and reducing the current consumed in the operation of the device and simplifying the electrical and mechanical construction of the car;

An improved means for controlling a car carrying the mechanical rabbit and offering means for controlling such car from within the oval of the track;

A simplified housing construction for a car conveying a mechanical rabbit, including unique and novel means for supplying to the motor driving the car electrical current;

Relieving a track of the necessity for installation of local power lines and making it possible to operate successfully upon storage batteries;

Improving the housing of a track so that its construction is made relatively cheap, the structure being such that it may be rapidly installed;

Simplifying the car and track construction of a dog track so that the car may be effectively stopped in a relatively short distance;

A novel type of electrically propelled conveyor car;

New means for obscuring the hare at the completion of a race;

An improved track structure whereby the fence is moved to conceal the hare and to stop the dogs at the close of a race; and

Simplifying the operation of a dog racing course.

These, and such other objects as may hereinafter appear, are obtained by the novel construction, combination, and arrangement of the several elements which constitute the embodiments of the invention illustrated in the accompanying three sheets of drawings, and in which

Figure 1 is a plan view of a track, a part thereof being in section, and the electrical circuit being shown schematically;

Figure 2 is a transverse section through one form of housing, the car and mechanical lure being shown in rear elevation;

Figure 3 is a fragmentary right side elevation of the car shown in Figure 2;

Figure 4 is a top view of said car;

Figure 5 is a left side elevation of the car, the mechanical hare and supporting arm being broken away;

Figure 6 is a fragmentary sectional view showing a different type of housing;

Figure 7 is a fragmentary plan view of a track showing a modified structure including the novel gate forming a part of the fence hereinabove mentioned;

Figure 8 is an elevation along the line 8—8 of Figure 7;

Figure 9 is an elevation and sectional view along the line 9—9 of Figure 7; and

Figure 10 is an elevation and sectional view along the line 10—10 of Figure 7.

Throughout the specification and description of the invention which follows, and in the drawing, like reference characters are used to indicate similar parts.

Figure 1 is a layout, more or less schematically illustrative of a conventional dog racing track with the present apparatus installed. At one side is a grand stand 10, this being upon the outside of the track 11 which is oval. A section of the housing about the outer side of the track 11 is broken away at 12 to show the general position of the mechanical lure carrying car therein. A stub-track 13 to receive the car at the close of a race is also shown in Figure 1, together with the switch 14 for opening the main track to the stub-track, together with a door 15 which is adapted to close over the lure after the car has gone upon the stub-track 13.

In Figure 1 is a housing or stand 16 which may be the field judge's house and which may be used for numerous purposes in connection with the operation of the race-track. In the housing 16 may be placed suitable storage batteries 17 whereby to supply electromotive force to the motor car, there being suitable control means (not shown) within the housing, or at any suitable point about the track, or at the end of a cable which is convenient to a field judge in the oval of the track, whereby the electromotive force flowing to the motors in the car may be controlled.

Normaly, the best place for such control means is within the housing 16 referred to or adjacent thereto. Such housing may be disposed as is shown or it may be placed in any other position within the oval of the track or if desired external to the track.

In Figure 2 which shows a section of one form of housing and an end view of the lure propelling car in elevation, there is an upright post 20, generally an eight inch by eight inch which is suitably sunk into the ground and which may be secured in the ground by cement or otherwise when desired.

As the housing is relatively low, the eight inch by eight inch uprights may extend well above the housing proper to provide posts between which is strung mesh wire fencing so that there will be no opportunity for the dogs to jump outside the track into the grand stand or elsewhere.

At the base of said uprights 20 and disposed upon the ground is a similar heavy beam, eight inches by twelve inches, and designated 22, upon which a rail 23 is disposed. The uprights 20 are spaced about the track at regulated spaced distances, and it is usual and customary in the construction of the track housing to dispose two or more planks 21 longitudinally between the posts 20. A relatively light piece of material as a one inch by twelve inch may be employed for this purpose. This shields the back of the housing and prevents contact with the electrical conduits forming a part thereof.

Disposed above the rail supporting member 22 is a second rail supporting member 25 which may be an eight inch by eight inch beam. Upon said beam 25 is disposed a second rail 26 which is like rail 23 but may be lighter. Rails 23 and 26 form the conduits of the electrical system used to operate the lure conveying car.

Projecting outwardly from said rail carrying member 25 is a shelf or apron 27 which may be of any desirable form, it being the object of such device 27 to project out sufficiently far that rains which may fall during the course of a race or at other times will be prevented from falling upon the upper rail which is connected to the positive side of the storage batteries 17.

A second form of track housing is shown in Figure 6. In this figure, the housing is shown as an obliquely disposed one inch by twelve inch top 27′ and the member 25′ supporting the uper rail 26′ and the uprights 20′ are sawed or cut obliquely so that they have

a slightly sloping top section upon which said top 27′ may rest. The inwardly projecting plank 27′ takes the place of the apron 27 described in Figure 2.

In the construction shown in Figure 6 the upright 20′ is provided at its base with a spacer block 28 which rests upon the ground. Adjacent to said spacer block 28, generally an eight inch by eight inch, and suitably secured thereto is a second block 22′, which is called the rail block, and upon this the lower rail 23′ is disposed. Of course, the spacer block 28 and rail block 22′ are both firmly secured to the upright 20′.

As is shown from Figure 1, a switch 14 is provided whereby the rails 23 and 26 may be moved from a position pointing around the track to a position to permit of a continuous pair of rails 23 and 26 directly onto the stub-track 13. Suitable electrical connections in such an arrangement are employed but are not here illustrated.

A door 15 such as is disclosed in a number of the Owen P. Smith patents on dog racing amusements may be provided on the track housing to close up an opening in such housing permitting the rabbit to pass therethrough. When such door is closed, it conceals the rabbit as is the usual practice and as illustrated in the several Smith patents just mentioned.

On the stub-track 13, a braking effect is obtained for the lure carrying car by spacing the rails 23 and 26 closer together as the end of the stub-track is approached. As the car, shortly to be described, is of relatively light weight, it may be quickly impeded by this means and brought to a standstill in a very small fraction of a second without undue strain upon the car itself or upon the stub-track supports.

Such a means for stopping a car is common in various forms of amusement devices involving cars, such devices including roller coasters and the like. A braking device of this character need not be described here. Of course, an adjustable means for applying the compression pressure used upon the rails 23 and 26 to stop the car is contemplated and this, when desired, may be manually controlled.

As can readily be seen from an examination of Figures 2, 3, 4, and 5, the car 31 is of relatively simple structure. It comprises primarily two side plates or frame members 32 which are held together in aligned parallelism. At the end of said side frames 32 are axles 33 which are suitably secured to the frame members 32 and upon which the main or driving wheels 34 of the apparatus are disposed.

At their tops the side plates 32 are formed to provide sleeves 35 supporting a projecting arm 36 which is adapted to carry a mechanical lure 37, such projecting arm 36 being of the usual type employed in the successful mechanical lures of the present time.

Such attachment of the arm 36 is obtained by machine screws 38 or otherwise, and at the free end of the arm 36 the rabbit 37 is fastened in any desirable way. The other end of the rabbit supporting arm 36 projects inwardly to provide an axle 39 for the revolution of an upper wheel 40 of the car carriage.

Upon said projecting shaft or axle 39 is a bushing or sleeve 41 of insulatory material which provides a bearing for the revolution of said upper wheel 40. Any suitable fastening for such insulatory sleeve 41 whereby it may be secured to said lure arm is contemplated.

It is desirable to place intermediate the said wheel 40 and the adjacent side frame 32 of the carriage an insulating disc 42 so that there can be no possibility of spark over or short circuit through the carriage.

Any suitable means of electrical connection may be arranged intermediate said upper wheel 40 and one binding post 43 of a motor 44 which is shown disposed intermediate said side members 32 and firmly secured thereto by bolts 45 to prevent displacement.

Said motor 44 may be of any suitable form and in the present instance is a low voltage direct current motor adapted to be driven by storage batteries. The motor 44 is adapted to drive a shaft 46 carrying a bevel gear 47, which bevel gear is in mesh with a second gear 48 forming a part of a sleeve 49 upon one of the driving wheels 34. Said driving wheel 34, in addition, has a sprocket 50 upon the sleeve 49 and about which a chain 51 moves, the chain 51 connecting to the other driving wheel 34 which is provided with a cooperating socket 52. The latter driving wheel 34 is devoid of a sleeve or gearing.

Any suitable means may be used for electrically connecting a second binding post 43 of the motor 44 to the driving wheels 34 so that the electrical circuit may be from the batteries 17 to a conduit 54, to the upper rail 26, through the upper guiding and trolley wheel 40, to the motor 44, from the motor 44 to a driving wheel 34, to the lower and supporting rail 23, and through a conduit 55 back to the storage batteries 17. The current control means supplied will be such that the speed of the motor 44 and likewise the speed to the car may be accelerated or decreased as occasion requires.

Suitable collars 56 are supplied upon the axles 33 to maintain the driving wheels 34 in proper position and to keep said wheels in alignment. Said collars 56 also provide for the proper assembly of the device and the adjustment of the gears employed.

By disposing the motor with its axis of revolution parallel to the direction of the travel of the car, a most compact car is pro-

vided. The direct gearing of the motor to one driving wheel with chain and sprocket connection to the second driving wheel from the first also simplifies the structure and permits the driving wheels to adjust the differential between them without involving the motor as would not be the case were both driving wheels connected directly to the motor.

A compact car of the character disclosed may be readily operated on a single ground rail, the horizontal position of the arm supporting the lure being easily maintainable by the use of the upper or trolley rail. Altogether the device is highly effective and exceedingly simple to build and to install.

In Figures 7, 8, 9 and 10, a novel gate adapted to be used with the hereinbefore described car is illustrated in conjunction with a differently disposed braking means which may also be employed in connection therewith.

In all dog races, it is necessary to remove the rabbit or mechanical lure from view at the close of the race, otherwise the dogs would continue to run thereafter and should they overtake it, they would destroy the hare.

In some devices, side tracks or extra loops, are employed for the purpose of taking the rabbit from the vision of the dogs. In other devices, the beam upon which the rabbit is carried is made to swing beneath the housing and in alignment with the direction of the car for the purpose of hiding the rabbit. In the first embodiment of the present invention herein discussed, a side or stub track is used.

In the present instance, the hare-carrying car is relatively light, and a simple and efficient braking means may be employed therewith in close association with a device adapted to be drawn across the race-course to impede the progress of the dogs, and to obscure their vision of the hare, it being necessary to provide in such a device a mechanism allowing the lure to pass thereby or therethrough, but thereafter completely obscuring the rabbit from the view of the pursuing dogs.

It is usual and customary on dog racing courses to provide an obscuring means operable at a point adjacent what may be called the first turn in the track. This is a convenient position for the disposition of the present device, as it allows ample time for the dogs to slow down after the judges' stand has been passed and before the barrier across the track is reached, it being presumed that the finish line will be disposed at a point substantially midway the length of straight stretch from which the first turn is made.

The gate arranged to swing across the track and the brake for stopping the car are preferably in juxtaposition to one another, and for a matter of convenience, the gate may comprise a part or section of the inner rail or fence with which dog courses are generally surrounded.

In Figures 7 to 10, inclusive, the gate comprises a sectional member forming a portion of the inner fence 70, one section of the gate 71 being pivoted at 72 adjacent to or upon a post 73 in such fence 70, the other section 74 being spring pivoted to the first section 71 and being free to be swung across the track in an arc when unfolded like a knife to reach the opposite side thereof.

Such gate comprising sections 71 and 74 is preferably of a material obscuring view, but need not be excessively heavy in that it is not expected that it will be subjected to serious strains. As a rule, the dogs, at the close of a race, will do no more than brush against it if they strike the gate at all. If its momentum is too great for it to stop and it is in danger of crashing into a barrier, almost invariably a dog will hurdle a fence, just as it would the inner fence or the outer fence. Such gate, 71 and 74, therefore should be of a sufficient height to discourage hurdling, but not of such a great height that in an emergency a dog would crash into it rather than attempt to clear it.

Any suitable pivoting device 72 may be used at the end of section 71 attached to the post 73 forming a part of the inner fence 70. A lever 75 is disposed on section 71 and such lever is impinged by a spring member 76 secured to fence 70 and which is adapted to urge the gate into closed position, that is, in a folded position along the track.

In view of the breadth of the track and the necessity for providing a section thereof with a trap and door to allow the passage of the lure, the gate is best constructed in two sections, although a one section gate could be employed. When the gate is in two sections and one section is pivoted upon the other, that portion or section 74 carrying the trap door is generally of less length than the supporting section 71.

In said shorter section 74 and pivoted in a horizontal plane partly thereacross is a gate 77 which is hinged to and across an opening in said shorter section and which trap door has as a part thereof a pivoted or hinged trigger 78. This depends from the lower edge of the door 77.

As an incident to lifting the trap door 77 to a shorizontal position, the trigger 78 assumes a vertical position and its free end rests upon the ground, whereby said trap door is propped open until some object deflecting the trigger 78 releases the trap door 77, whereupon said trap door drops to a vertical plane and provides a solid section of gate extending across the track.

As the car passes around the track at the close of a race, it will approach the gate section 74. The sections 71 and 74 are drawn across the track by manual operation after

the dogs have started, and this operation is generally performed by a field judge or an assistant located in or near the control box 16 at the center of the track. By pulling upon a cable 79 which passes about a lug or pulley 80 anchored in the oval or field within the track, the gate section 71 is pulled away from the inner rail 70 and across the track. By another cable 81 which is secured to a lever 82 upon section 74, the latter section 74 may be drawn across the track until the free end of the sectional gate impinges the wire or railing on the outer rail 83 of the track.

Conjointly and by the employment of a third cable 84 which passes about a pulley 85 anchored upon the smaller section 74 of the gate, the trap door 77 is opened, the opening of such door allowing the pivoted trigger 78 to become set upon the ground to hold the door 77 open pending the unseating of the trigger 77 as an incident to a lure or lure arm carried by the car passing through the open space provided by elevating said trap door 77. The instant the car and arm shall have unseated the trigger 78, the trap door 77 drops to a vertical plane, falling in an arc in the direction of motion of the car. The operator at the center of the track, in the meantime, has of course, released all tension upon the cable 84 employed for elevating the trap door 77.

With the passing of the mechanical lure through said trap door 77 and the disappearance from view of the hare conjointly with the discontinuance of the noise of the motor brought about by the stopping of the car by the braking means now to be described, the dogs which have completed the race will approach close to but ordinarily not beyond the gate sections 71 and 74 which are drawn across the track. Here the dogs upon stopping will be leashed by attendants, there always being one attendant for each dog as is conventional, and thereafter the dogs will be returned under leash to the paddock judges' quarters, after which the dogs will be returned to their kennels.

Preparatory to the next race, the cable 79 which has been used to pull the gate 71 across the track is released to free section 71 which will under the urge of spring 76 fall back to form a section of rail 70, cable 81 being released to allow section 74 to fold over section 71. Of course, cable 81 may be so disposed, as shown, that as an incident to moving and releasing section 71, there will be a conjoint unfolding from and folding thereagainst of section 74.

In order to quickly stop a car in a section of the housing in proximity to said gate, a section 90 of the upper rail 26 may be pivoted. Said section 90 may comprise a rail material substantially identical with that employed for the conduit rail 26, or it may be especially formed and constructed for this particular application.

From its pivot 91, which pivot is adjacent to the immovable track section 26 and in the direction from which a car normally approaches, the track section 90 held in a vertical plane by guideways 92 provided therefor and under the urging of one or more springs 93, is depressed downwardly in the direction of the under conduit 23 so that a narrow and tapered section of track is thus formed. The tension upon the springs 93 is such that a car passing onto such narrow section of track will be quickly stopped because of the resistance to its further linear travel brought about by said springs 93 impressing their force upon said rail section 90.

Successful stopping of a car may be had in a relatively short distance by this arrangement and without a great jar upon the car. As the space between rails 23 and 90 decreases, as the springs 95 are approached, the momentum of the car is rapidly and regularly reduced, the car coming to a full stop before the end of short rail 90 is attained.

The arrangement herein illustrated and described causes a car to remain locked in the position attained by it when the brake becomes effective for the force of the car is sufficient to spread the rails 23 and 90 to a degree that the upper rail section 90 will be substantially parallel with the lower rail 23, thus doing away with any tendency of the car to rebound under the urging influence of the springs 93.

When it is desired to release the car for further propulsion under its own power, a judge or other operative who may be disposed at the center of the track or in any other convenient place, may pull upon a cable 94 which is adapted to pass around a pulley 95 disposed upon a post 96 adjacent to the outer rail 53 of the track such pulling force being adapted to elevate the upper rail section 90 until it becomes parallel to the lower rail 23 and ceases thereafter to provide a narrow and impeding section of track.

I claim:

1. In a device adapted to propel a mechanical lure about a race-course, triangularly disposed wheels adapted to engage rails disposed one above the other and in different parallel vertical planes, a motor for driving one of said wheels, and means for energizing said motor through another wheel.

2. In a device adapted to propel a mechanical lure about a race-course and to ride upon vertically spaced rails, said rails being in different vertical but parallel planes upper and lower wheels intermediate said rails, a motor for driving said device, said motor being adapted to actuate a wheel upon one rail, and means for energizing said motor through said other rail and other wheel.

3. A carriage adapted to propel a me-

chanical lure and comprising frame members, an arm for supporting said mechanical lure upon said frame members and projecting therefrom to form an axle for a wheel, a motor supported upon said frame, and driving wheels driven by said motor.

4. A carriage adapted to propel a mechanical lure and comprising frame members, driving wheels in association therewith, an arm for supporting a mechanical lure upon said frame members and projecting to form an axle for a guide wheel, and a motor supported upon and actuating said driving wheels, said motor being geared to one of said wheels and the other thereof being connected to the first mentioned driving wheel by a chain and sprockets.

5. A carriage adapted to propel a mechanical lure and comprising spaced apart frame members, an arm for supporting a mechanical lure upon said frame members and projecting to form an axle for a guide wheel, cross members between said frame members, driving wheels journalled on said cross members, and a motor for said driving wheels intermediate said frame members.

6. A carriage adapted to propel a mechanical lure and comprising spaced apart frame members, an arm for supporting a mechanical lure upon said frame members and projecting to form an axle for a guide wheel, cross members between said frame members and forming axles for driving wheels, driving wheels thereon, and a motor for said driving wheels intermediate said frame members and secured to one thereof.

7. A car for conveying a mechanical lure comprising spaced apart side members adapted to support an arm having at one end a mechanical lure, said arm having a short extension upon the opposite end to provide a support for a wheel, a trolley and guide wheel thereon, driving wheels intermediate said frame members, a motor intermediate said frame members, and means for connecting said driving wheels and said motor.

8. A car for conveying a mechanical lure comprising spaced apart side members adapted to support an arm having at one end a mechanical lure, said arm having a short extension upon its opposite end to provide a bearing for a wheel, a trolley and guide wheel thereon, driving wheels intermediate said frame members and adjacent to said trolley wheel, a motor intermediate said frame members and adjacent to said trolley wheel, a motor intermediate said frame members and mounted upon the side member away from said wheels, and means for connecting said driving wheels and said motor.

9. A car for conveying a mechanical lure comprising frame members adapted to support an arm having at one end a mechanical lure and at its other end a bearing for a wheel, a trolley and guide wheel thereon, driving wheels intermediate said frame members and upon the opposite side of said frame member adjacent said trolley and guide wheel, a motor upon the other of said frame members, and means for connecting said driving wheels and said motor.

10. A new and novel mechanical lure comprising a rabbit, a supporting arm therefor, frame members for holding said supporting arm, a trolley at the opposite end of said supporting arm, axles intermediate said frame members, driving wheels upon said axles, a motor, and means for translating the motion of said motor to said driving wheels.

11. A new and novel mechanical lure comprising a rabbit, a supporting arm therefor, frame members for holding said supporting arm, a trolley at the opposite end of said supporting arm and adapted to engage a guide rail, axles intermediate said frame members, driving wheels upon said axles, a motor upon one of said frame members, and means for translating the motion of said motor to said driving wheels.

12. A new and novel mechanical lure comprising a rabbit, a supporting arm therefor, frame members for holding said supporting arm, axles intermediate said frame members, an upper guide and trolley wheel upon the opposite end of said supporting arm and adjacent one of said frame members, driving wheels upon said axles and in close proximity to the last mentioned frame member, a motor secured to the other of said frame members, and means for translating the motion of said motor to said driving wheels, said driving wheels forming a part of the electrical circuit to and from said motor.

THOMAS A. KEEN.