(No Model.)

J. W. BIRCH.

MACHINE FOR FINISHING INKING PADS.

No. 456,544. Patented July 28, 1891.

Fig. 1.

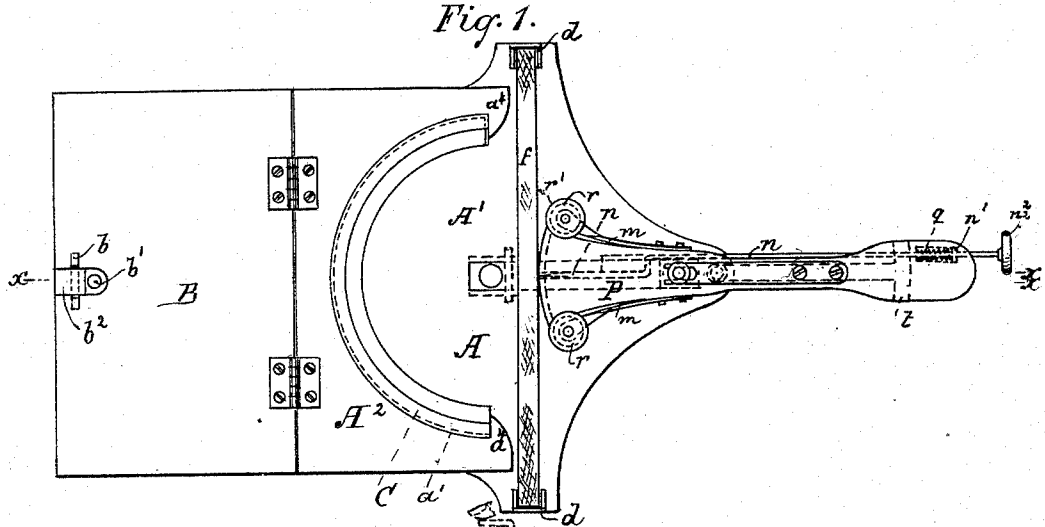

Fig. 2

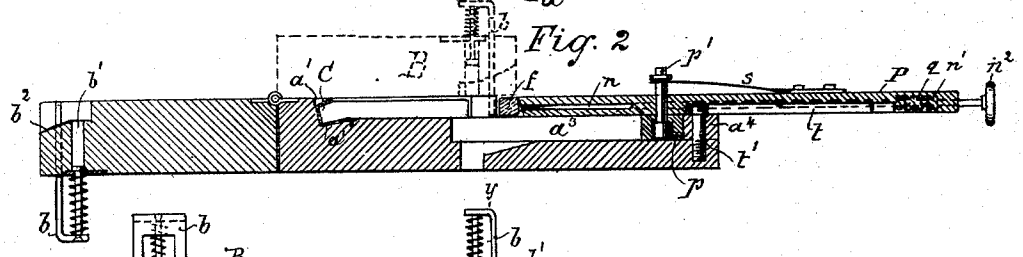

Fig. 5.

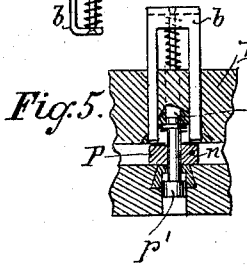

Fig. 3.

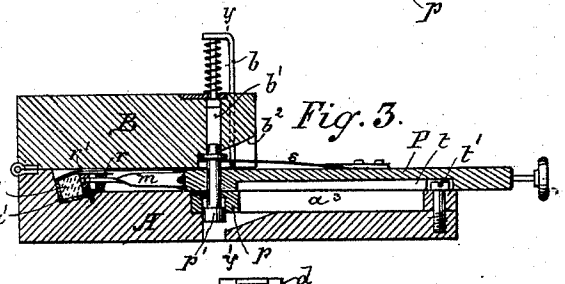

Fig. 4.

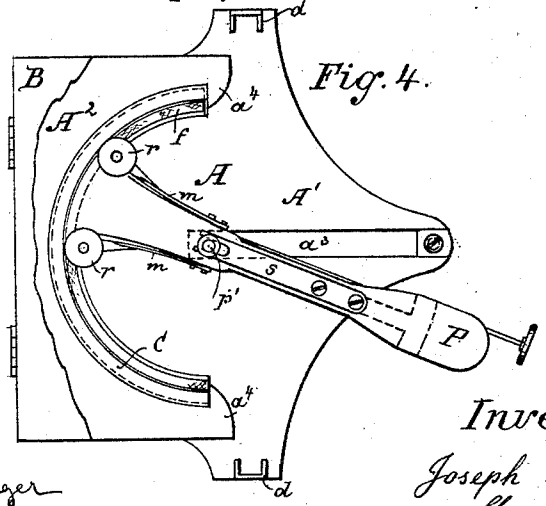

Witnesses.

Julius Kroger

William H. Nash.

Inventor.

Joseph W. Birch

per Charles Raetting

his Atty.

THE NORRIS PETERS CO., PHOTO-LITHO., WASHINGTON, D. C.

UNITED STATES PATENT OFFICE.

JOSEPH W. BIRCH, OF NEW YORK, ASSIGNOR TO JOHN R. KEATINGE, OF BROOKLYN, NEW YORK.

MACHINE FOR FINISHING INKING-PADS.

SPECIFICATION forming part of Letters Patent No. 456,544, dated July 28, 1891.

Application filed November 19, 1890. Serial No. 371,927. (No model.)

To all whom it may concern:

Be it known that I, JOSEPH W. BIRCH, a citizen of the United States, and a resident of New York, in the county of New York and State of New York, have invented certain new and useful Improvements in Machines for Finishing Inking-Pads, of which the following is a specification.

My invention relates to improvements in machines for finishing inking-pads for printing-machines, type-writing machines, &c., in which annular pads are used or pads having the shape of a section of an annulus, and in which the wick, preferably saturated with ink, is held in an annular trough or thin metal casing or in a casing forming a section of an annulus; and my invention consists in a combination of devices by means of which the wick or felt strip, having preferably been saturated with ink, is brought home to its proper position, automatically securing a perfectly uniform article of manufacture.

In the accompanying drawings, Figure 1 is a plan view of my mechanical device, showing the position when open ready to receive the saturated strip of felt and with the metal casing in position. Fig. 2 is a longitudinal section by the line $x\ x$ in Fig. 1, showing the cover B in dotted lines when closed. Fig. 3 is a longitudinal section of the device, showing the cover B closed and the felt strip f pressed forward into the casing C by means of the lever P. Fig. 4 is a plan view of Fig. 3 with the cover B partially broken off and the lever P swung to one side around the pin p' as a fulcrum. Fig. 5 is a transverse section by the line $y\ y$ in Fig. 3.

To a bottom plate A, containing a groove or recess a', cut to receive the casing C of the pad or portion of the pad to be finished is hinged a cover B, provided with a spring-latch b. The front part A′ of the plate A recedes from the rear part A^2 for the thickness of the felt strip f to be pressed into the casing, so that when the cover is folded down the strip f is guided above and below.

In the case of an annular pad, frequently used in type-writing machines, the pad is preferably made in two halves. This is the case illustrated in the accompanying drawings. A block p, sliding in a groove a^3, provided in the plate A and running from the front to a point behind the center of the semi-annular depression, carries a lever P, a sliding pin p' passing through both. A spring s, one end of which is secured to lever P and the other forked end of which is passed under a shoulder in pin p', holds the lower and thicker part of the pin p' against a shoulder in the block p, as shown in Fig. 2 of the drawings. The lever P is provided at its lower surface with a T-shaped central groove t, which engages with a pin t', secured in the plate A near its front on the center line of the groove a^3, which may at the same time form the head of a screw which secures the stop-block a^4 in the front end of the groove a^3 to the plate A. A bent needle n, the point of which is placed centrally at the end of the lever P, flush with the conical end face of the same, is held in position by means of a coil-spring q pressing against a shoulder n' of the needle n. The projecting front end of the needle is preferably provided with a button or handle n^2. By pressing on this button the point of the needle will be projected beyond the conical surface of lever P, and will on relieving the pressure be returned to its former position by the action of the coil-spring q. Two adjustable flat springs $m\ m$, pressing outward, one at each side of the lever P, carry flanged bevel-rollers $r\ r$, the upper flanges r' of which just touch the upper rim of the casing C when the lever is pushed forward to its extreme forward position—that is, the position at which the pin p', having been previously depressed by the cam b^2 on cover B, engages with the hole b', provided in the cover B, the center of which coincides with the axis of the semi-annular groove a' or the casing C—by the pressure of the spring s, as shown in Figs. 3, 4, and 5. A vertical plane through the center line of the groove a^3 divides the semi-annular casing C, and also the plate A, in two equal parts and is also the plane in which the point of the needle n is moving. Equidistant from this plane at both sides are gage-cups d, mounted upon plate A, which indicate the position into which the wick or strip of felt of proper length

will be placed in front of the lever P previous to closing cover B and propelling the needle and lever forward. To avoid abrupt bending of the wick, the inner edges a^4 of the raised part A^2 of the plate A are rounded, as shown in Figs. 1 and 4.

The operations in using the machine are then as follows: The machine is placed on a table with the cover being swung open and the lever drawn out to its extreme position, as shown in Fig. 1. The strip of felt, preferably inked and of a rectangular section, is placed behind the lever, the ends engaging the gage-cups d d, and the casing C is inserted. The cover B is then closed, and the spring-latch b, depressed by one hand of the operator, is made to descend close behind the felt strip. The pin n is now caused to enter the strip of felt f by pressing upon the button n^2 and will take hold of it exactly in the middle. The pressure upon the spring-latch b is now released, permitting the same to return, and the central portion of the felt strip f is gradually pressed into the casing C by pushing the lever P forward, the latter being guided in a straight central movement by the pin p', slide-block p, and groove a^3 at one end and by the pin t' and groove t at the other end till the pin p' drops into the center hole b'. The open end of the slot t will at that moment have arrived opposite the pin t' and allow the lever P to swing or vibrate around the pin p'. The cover B is held down with one hand during the straight movement of lever P, and the needle-point in the felt, holding the felt strip exactly central, will prevent its slipping from one side to the other. The pressure on the needle n being released, the spring q will return it, and the lever P is now free to be oscillated alternately to the right and left, and thus to press home into the proper places of the casing both ends of the felt strip. The flanges r' of the bevel-rollers secured to the lever P will during this swinging operation press against the upper rim of the casing C, trimming on their way the edges of the felt and producing a perfect and smooth pad. The cover B is now swung open, the lever P returned, and the finished pad removed ready for use.

Having described my invention, what I claim, and desire to secure by Letters Patent, is—

In a machine for finishing inking-pads, the combination of the plate A, having the grooves a' a^3, gage-cups d d, and pin t' and carrying the lever P, having the needle n, springs s and m, rollers r r, and the groove t on pin p', secured in a slide-block p, and having both a rectilinear and an oscillating motion, with the cover B, having a cam b^2 and spring-latch b, felt strip f, and casing C, as and for the purposes herein shown and described.

Signed at New York, in the county of New York and State of New York, this 18th day of November, A. D. 1890.

JOSEPH W. BIRCH.

Witnesses:
HUNTINGTON PAGE,
JOSEPH A. FARRELL.