(12) INTERNATIONAL APPLICATION PUBLISHED UNDER THE PATENT COOPERATION TREATY (PCT)

(19) World Intellectual Property Organization
International Bureau

(43) International Publication Date
16 April 2015 (16.04.2015)

WIPO | PCT

(10) International Publication Number
WO 2015/052050 A1

(51) International Patent Classification:
C10J 3/34 (2006.01)

(21) International Application Number:
PCT/EP2014/071014

(22) International Filing Date:
1 October 2014 (01.10.2014)

(25) Filing Language: English

(26) Publication Language: English

(30) Priority Data:
10 2013 111 145.9
9 October 2013 (09.10.2013) DE

(71) Applicant: **L'AIR LIQUIDE, SOCIÉTÉ ANONYME POUR L'ETUDE ET L'EXPLOITATION DES PROCÉDÉS GEORGES CLAUDE** [FR/FR]; 75, quai d'Orsay, F-75007 Paris (FR).

(72) Inventor: **TIMMERMANN, Henrik**; Eleonore-Sterling-Straße 36, 60433 Frankfurt am Main (DE).

(74) Agent: **HEINE, Christian**; KNH Patentanwälte Kahlhöfer Neumann Rößler Heine, Postfach 103363, 40024 Düsseldorf (DE).

(81) Designated States *(unless otherwise indicated, for every kind of national protection available)*: AE, AG, AL, AM, AO, AT, AU, AZ, BA, BB, BG, BH, BN, BR, BW, BY, BZ, CA, CH, CL, CN, CO, CR, CU, CZ, DE, DK, DM, DO, DZ, EC, EE, EG, ES, FI, GB, GD, GE, GH, GM, GT, HN, HR, HU, ID, IL, IN, IR, IS, JP, KE, KG, KN, KP, KR, KZ, LA, LC, LK, LR, LS, LU, LY, MA, MD, ME, MG, MK, MN, MW, MX, MY, MZ, NA, NG, NI, NO, NZ, OM, PA, PE, PG, PH, PL, PT, QA, RO, RS, RU, RW, SA, SC, SD, SE, SG, SK, SL, SM, ST, SV, SY, TH, TJ, TM, TN, TR, TT, TZ, UA, UG, US, UZ, VC, VN, ZA, ZM, ZW.

(84) Designated States *(unless otherwise indicated, for every kind of regional protection available)*: ARIPO (BW, GH, GM, KE, LR, LS, MW, MZ, NA, RW, SD, SL, ST, SZ, TZ, UG, ZM, ZW), Eurasian (AM, AZ, BY, KG, KZ, RU, TJ, TM), European (AL, AT, BE, BG, CH, CY, CZ, DE, DK, EE, ES, FI, FR, GB, GR, HR, HU, IE, IS, IT, LT, LU, LV, MC, MK, MT, NL, NO, PL, PT, RO, RS, SE, SI, SK,

[Continued on next page]

WO 2015/052050 A1

(54) Title: PROCESS FOR THE PRODUCTION OF A SYNTHESIS GAS FROM CARBONACEOUS FUEL WITH LOW FIXED-CARBON CONTENT

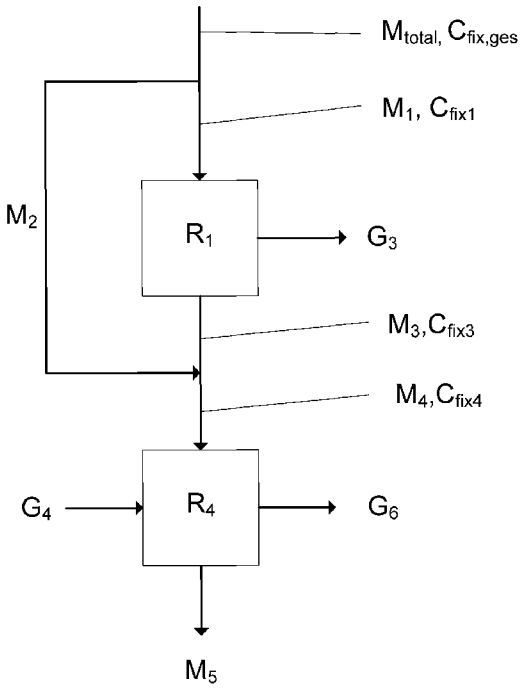

Fig. 1

(57) Abstract: Process and plant for the production of a synthesis gas containing carbon monoxide and hydrogen from carbonaceous fuel with low fixed-carbon content, wherein upstream of the synthesis gas production a pyrolysis treatment of the fuel is provided in a separate reactor.

SM, TR), OAPI (BF, BJ, CF, CG, CI, CM, GA, GN, GQ, GW, KM, ML, MR, NE, SN, TD, TG).

Published:

— *with international search report (Art. 21(3))*

Process for the Production of a Synthesis Gas from Carbonaceous Fuel with Low Fixed-Carbon Content

Field of the Invention

This invention relates to a process for the production of a synthesis gas containing carbon monoxide and hydrogen from carbonaceous fuel with low fixed-carbon content. This invention also relates to a plant in which the process according to the invention is operated.

Prior art

Processes and plants for the gasification of carbonaceous fuels, such as lignite, hard coal or coke, are known from the prior art. What has proven particularly suitable is the use of fixed-bed gasification reactors, cf. Ullmann´s Encyclopedia of Industrial Chemistry, Sixth Edition, Vol. 15, pp. 367 to 371.

With the gasification media oxygen and steam the fuel is gasified to a synthesis gas chiefly consisting of carbon monoxide and hydrogen, by forming an ash. In the following, the term synthesis gas is to be understood such that this gas is a

synthetically, i.e. artificially, produced gas. Nothing should be stated here as to the further use of the gas.

For some time, fixed-bed gasification reactors also have been used for the gasification of fuels with low fixed carbon content, such as wood, biowaste and domestic waste.

Fixed-carbon content C_{fix}, indicated in wt-%, is understood to be that amount of fuel which is left after subtraction of the water content (determined according to DIN 51718), the ash content (determined according to DIN 51719) and the content of volatile constituents, i.e. constituents to be expelled by pyrolysis (determined according to DIN 51720).

In the following, the indicated values for the fixed-carbon content C_{fix} relate to the water- and ash-free reference state, i.e.

$$C_{fix}\ [\text{wt-\%}] = (M_{total}\ [g] - M_W\ [g] - M_{ash}\ [g] - M_{volatiles}\ [g])/(M_{total}\ [g] - M_W\ [g] - M_{ash}\ [g])$$

wherein

M = mass

M_{total} = total mass of the sample

M_W = mass of the moisture in the sample

M_{ash} = mass of the ash in the sample

$M_{volatiles}$ = mass of the volatile constituents in the sample to be expelled by pyrolysis

In the fixed bed of the gasification reactor, the fuel passes through the phases of drying, pyrolysis, gasification, combustion and discharge of the ash or slag from top to bottom i.e. in direction of rising temperature.

In the pyrolysis, the non-fixed carbon in the fuel is expelled from the fuel in the form of highly volatile gases, chiefly carbon dioxide and methane, and

condensable hydrocarbons, such as tar and oils. These gases leave the reactor unburnt and mixed with the synthesis gas, so that subsequently further process steps are required for separating these gases.

Of the usual fuels coke, hard coal and lignite the latter has the lowest C_{fix} content of about 45 wt-%. The synthesis gas produced from fuels with even lower C_{fix} content, such as wood or garbage, therefore contains an unusually high content of volatile pyrolysis gases and therefore requires further technical measures, in order to be processed together with the synthesis gas of usual composition.

When the fixed-carbon content of the fuel merely lies in the range of 15 wt-% or below, the problem furthermore arises that the amount of fixed carbon is not sufficient to produce the required heat for the formation of carbon monoxide and hydrogen for the pyrolysis and for drying the fuel in the upper region of the fixed bed by its combustion and at the same time be available as reactant for the formation of hydrogen and carbon monoxide.

When the content of fixed carbon is very low, this can lead to the fact that these fuels merely are pyrolyzed and burnt, and the formation of synthesis gas, i.e. carbon monoxide and hydrogen, hardly occurs. In these cases, the endothermal, heat-consuming reactions for the formation of synthesis gas then take place only to such a small extent that the temperature of the produced gas leaving the reactor rises so much, in some cases to more than 650 °C, that the reactor can be damaged.

Because fixed-bed gasification reactors mostly are operated at elevated pressure, the addition of fuel via a pressure lock mostly is effected in a discontinuous way. Since the pyrolysis of these fuels is effected very quickly, this discontinuous fuel supply leads to temporal fluctuations of the gas quantity produced. These fluctuations can have a disturbing effect on the methods with which the gas produced is treated further.

An additional difficulty in the use of these fuels consists in that during the pyrolysis taking place in the upper region of the fixed bed they are converted into a very fine-grained coke. This can impair the uniformity of the traversal of the fixed bed with the gasification media, oxygen and steam. In addition, the pressure loss of the gas flowing through the fixed bed is increased with progressive deposition of coke.

One method to improve the processability of these fuels in the fixed-bed gasification reactor consists in increasing the content of fixed carbon in the fuel by admixing coal or coke to the fuel.

However, it is difficult to uniformly distribute the coal or the coke in the fuel, which e.g. consists of domestic waste. The consequence is a nonuniform operation of the reactor, with large fluctuations of the quality and quantity of the gas produced. In addition, the fuel costs are increased by admixing high-grade fuels with high C_{fix} content, partly due to the transport costs for the high-grade additional fuels.

The above-mentioned problem of the increased amount of pyrolysis gases in the gas produced, when using fuels with small C_{fix} content, only is reduced, but not eliminated by this measure of admixing coal.

In view of these numerous problems, it therefore has been the object to provide a process which avoids these disadvantages.

Description of the Invention

The object substantially is solved by a process for the production of a synthesis gas chiefly consisting of carbon monoxide and hydrogen from carbonaceous fuel with low fixed-carbon content, comprising the following process steps:

a) providing dried fuel and the gasification media oxygen and steam,

b) introducing at least a part of the fuel into a first reactor,

c) pyrolyzing the introduced part of the fuel in the first reactor and discharging the gases produced for the further treatment,

d) discharging the fuel from the first reactor,

e) mixing the fuel treated in step c) with the untreated part of the fuel from step a),

f) introducing the fuel from step e) into a second reactor,

g) gasifying the fuel in the second reactor by using the gasification media under gasification conditions to obtain a synthesis gas containing hydrogen and carbon monoxide, wherein the synthesis gas and the ash are discharged from the second reactor for the further treatment.

Further advantageous aspects of the process according to the invention can be found in the sub-claims.

Gasification conditions are understood to be those conditions which by using the described gasification media lead to a conversion of the fuel to the synthesis gas constituents, which is acceptable from an economic point of view. They are well known to the skilled person from the relevant prior art, for example from the reference mentioned above.

Due to the at least partial displacement of the pyrolysis of the fuel from the fixed-bed gasification reactor into a separate, upstream reactor, in particular the following advantages are achieved:

- The hydrocarbons released during the pyrolysis in gaseous form are not mixed with the gas produced during the gasification of the bound carbon, which chiefly consists of carbon monoxide and hydrogen. Therefore, they can be supplied to a specific further treatment or conditioning which is optimized with regard to their composition.
- The pyrolysis increases the content of fixed carbon in the fuel and thus provides for carrying out the gasification in the fixed-bed pressure gasifier without having to admix coal or coke to the fuel. Increasing the content of fixed carbon on the one hand is effected relatively, i.e. by expelling the non-fixed carbon with the pyrolysis

gases from the fuel, but on the other hand also absolutely by converting non-fixed carbon into fixed carbon in the pyrolysis.

- The pyrolysis of the fuel, as it is carried out separate from the gasification, can be carried out such that a coke is produced which is more coarse-grained than would be possible in the fixed bed.

- Due to the inventive separation of pyrolysis and gasification it is possible to carry out these two process steps at separate plant locations. For example, garbage provided as fuel can be pyrolyzed at decentralized locations and then be further processed in a central gasification plant. Since the volume of the fuel is reduced by the pyrolysis, transport costs can be saved and the central gasification can be designed with a larger, more economic capacity.

The invention advantageously is applicable in particular for the gasification of wood, in particular waste wood, as well as biowaste and domestic waste which chiefly consists of biowaste and plastic residues, such as packaging material.

In a further aspect, the invention also relates to a plant for operating the process according to the invention, wherein the plant comprises at least one first reactor for the pyrolysis of the fuel, at least one second reactor for the gasification of the previously pyrolyzed fuel, feeding devices each for feeding a part of the untreated fuel to the first reactor and to the second reactor, a draining device for draining the fuel pyrolyzed in the first reactor, a mixing device for untreated and pyrolyzed fuel, and discharge devices for discharging pyrolysis gas from the first reactor as well as for discharging ash and synthesis gas from the second reactor.

Further preferred aspects of the invention

An advantageous aspect of the invention consists in that depending on its quality not the entire fuel must pass through the separate pyrolysis reactor, but that a part of the fuel is supplied untreated to the second reactor designed as fixed-bed pressure gasification reactor. In this way, the investment and operating costs of the gasification plant can be optimized. It is possible that a single fuel grade is submitted to the process according to the invention, wherein a part thereof is

branched off, pyrolyzed and admixed again, or that two fuel grades are submitted, only one of which, wholly or in part, is pyrolyzed and then admixed for the gasification of the other grade.

In principle, carrying out the invention is independent of the kind of gasification process, i.e. independent of whether the fuel is converted to ash or slag and to synthesis gas in a fluidized bed, in an entrained flow or in a fixed bed. The process according to the invention, however, is particularly expedient for use in conjunction with fixed-bed gasifiers in which the fuel is present in a fixed bed held by a discharge grate. Fixed-bed gasifiers require a higher C_{fix} content in the fuel than for example entrained-flow gasifiers, as in the fixed bed the fixed carbon is the only supplier of thermal energy, whereas in the entrained flow the pyrolysis gases additionally contribute to the supply of thermal energy by combustion.

Another advantageous aspect of the invention consists in adjusting the content of fixed carbon in the fuel, which is introduced into the fixed-bed gasification reactor, by separate pyrolysis to at least 15 wt-%, preferably to at least 25 wt-%, and particularly preferably to at least 45 wt-%. Due to this measure, enough fixed carbon is present in the fixed bed of the fuel, in order to carry out the exothermal combustion reactions and the endothermal reactions for forming carbon monoxide and hydrogen, wherein the temperature of the gas produced in the gasification reactor remains below 600 °C and the wear of the reactor wall is limited.

In a further aspect of the process according to the invention, the amount of the untreated fuel, which must be treated in the first reactor, in order to adjust a desired content of fixed carbon in the fuel supplied to the second reactor, is calculated as follows:

$$M_1 / M_{total} = (1 - C_{fix4}(M_4) / C_{fix,total}(M_{total})) / (1 - C_{fix4}(M_4) \times C_{fix3}(M_3) / C_{fix,total}(M_{total}) - C_{fix4}(M_4) / C_{fix,total}(M_{total})),$$

wherein

M_1/M_{total} = amount of the untreated fuel to the first reactor

$C_{fix4}(M_4)$ = content of fixed carbon in the fuel to the second reactor

$C_{fix,total}$ (M_{total}) = content of fixed carbon in the untreated fuel

$C_{fix3}(M_3)$ = content of fixed carbon in the product stream of the first reactor

Exemplary embodiments and numerical examples

Further developments, advantages and possible applications of the invention can also be taken from the following description of non-limiting exemplary embodiments and numerical examples. All features described form the invention per se or in any combination, independent of their inclusion in the claims or their back-reference.

In the only Figure

Fig. 1 shows a schematic diagram of the mass flows of the process according to the invention.

This schematic diagram will be explained below. The mass flow M_{total} of the fuel, which is to be converted into synthesis gas G_6, contains the mass flow $C_{fix,total}$ of fixed carbon. In dependence on its quality, the fuel is introduced into the first reactor R_1 completely or only in part for pyrolysis. In the latter case, the part M_2 not treated in the reactor R_1 and the pyrolyzed part M_3 are mixed with each other by means of a non-illustrated mixing device before introduction into the reactor R_4 to obtain the mass flow M_4. The material stream G_3 represents the pyrolysis gas withdrawn from the reactor R_1 for the further treatment. The mass flow M_4 is introduced into the second reactor R_4 and by means of gasification medium G_4 converted into synthesis gas G_6 and ash M_5. The synthesis gas stream G_6 and the ash stream M_5 are discharged from the reactor R_4 for the further treatment.

With reference to the following example it will be explained how the necessary size of the fuel content M_1/M is determined, which is to be adjusted, in order to

adjust in the fuel stream M_4, which is introduced into the gasification reactor R_4, a desired content of fixed carbon suitable for the gasification in R_4.

Numerical example:

Desired: $C_{fix4}(M_4)$: 45 wt-%

Measured: $C_{fix,total}$ (M_{total}) = $C_{fix1}(M_1)$: 17 wt-%

Measured: $C_{fix3}(M_3)$: 28 wt-%

The amount of the fuel, M_1/M_{total}, which must be treated in the reactor R_1, in order to obtain the desired content of C_{fix4} = 45 wt-% of fixed carbon in the fuel stream M_4, which is introduced into the second reactor R_4, is calculated as follows:

$$M_1 / M_{total} = (1 - C_{fix4}(M_4) / C_{fix,total}(M_{total})) / (1 - C_{fix4}(M_4) \times C_{fix3}(M_3) / C_{fix,total}(M_{total}) - C_{fix4}(M_4) / C_{fix,total}(M_{total}))$$

i.e.

$M_1 / M_{total} = (1 - 0.45 / 0.17) / (1 - 0.45 \times 0.28 / 0.17 - 0.45 / 0.17) = 0.69 =$ 69 wt-%,

consequently, 69 wt-% of the submitted fuel mass M_{total} accordingly must be subjected to the pyrolysis in reactor R_1, in order to adjust a specific content of fixed carbon C_{fix4} of 45 wt-% in the fuel M_4 supplied to the gasification reactor R_4.

Industrial Applicability

The invention provides an alternative process which provides for the production of synthesis gas also from fuels with very low fixed-carbon content, in particular also by means of fixed-bed gasification reactors.

List of Reference Numerals:

M_{total}, M_1, M_2, M_3, M_4	mass flow [kg/h] of the fuel
$C_{fix,total}$, C_{fix1}, C_{fix3}, C_{fix4}	mass flow [kg/h] of the fixed carbon contained in the fuel
M_5	mass flow of ash
G_3	mass flow of pyrolysis gas
G_6	mass flow of synthesis gas
R_1	pyrolysis reactor
R_4	reactor for synthesis gas production

Claims:

1. A process for the production of a synthesis gas chiefly consisting of carbon monoxide and hydrogen from carbonaceous fuel with low fixed-carbon content, comprising the following process steps:
   a) providing dried fuel and the gasification media oxygen and steam,
   b) introducing at least a part of the fuel into a first reactor,
   c) pyrolyzing the introduced part of the fuel in the first reactor and discharging the gases produced for the further treatment,
   d) discharging the fuel from the first reactor,
   e) mixing the fuel treated in step c) with the untreated part of the fuel from step a),
   f) introducing the fuel from step e) into a second reactor,
   g) gasifying the fuel in the second reactor by using the gasification media under gasification conditions to obtain a synthesis gas containing hydrogen and carbon monoxide, wherein the synthesis gas and the ash are discharged from the second reactor for the further treatment.
2. The process according to claim 1, characterized in that a part of the fuel is supplied untreated to the second reactor designed as fixed-bed pressure gasification reactor.
3. The process according to claim 1 or 2, characterized in that the fuel in the second reactor is present in a fixed bed held by a discharge grate.
4. The process according to any of the preceding claims, characterized in that the fixed-carbon content C_{fix} of the fuel introduced into the second reactor in step 1.e) is at least 15 wt-%, preferably at least 25 wt-%, particularly preferably at least 45 wt-%.
5. The process according to any of the preceding claims, characterized in that the amount of the untreated fuel, which must be treated in the first reactor, in order to adjust a desired content of fixed carbon in the fuel supplied to the second reactor, is calculated as follows:

$$M_1 / M_{total} = (1 - C_{fix4}(M_4) / C_{fix,total}(M_{total})) / (1 - C_{fix4}(M_4) \times C_{fix3}(M_3) / C_{fix,total}(M_{total}) - C_{fix4}(M_4) / C_{fix,total}(M_{total})),$$

wherein

M_1/M_{total} = amount of the untreated fuel to the first reactor

$C_{fix4}(M_4)$ = content of fixed carbon in the fuel to the second reactor

$C_{fix,total}$ (M_{total}) = content of fixed carbon in the untreated fuel

$C_{fix3}(M_3)$ = content of fixed carbon in the product stream of the first reactor

6. A plant for operating the process according to the preceding claims, characterized in that the plant comprises at least one first reactor for the pyrolysis of the fuel, at least one second reactor for the gasification of the previously pyrolyzed fuel, feeding devices each for feeding a part of the untreated fuel to the first reactor and to the second reactor, a draining device for draining the fuel pyrolyzed in the first reactor, a mixing device for untreated and pyrolyzed fuel, and discharge devices for discharging pyrolysis gas from the first reactor as well as for discharging ash and synthesis gas from the second reactor.

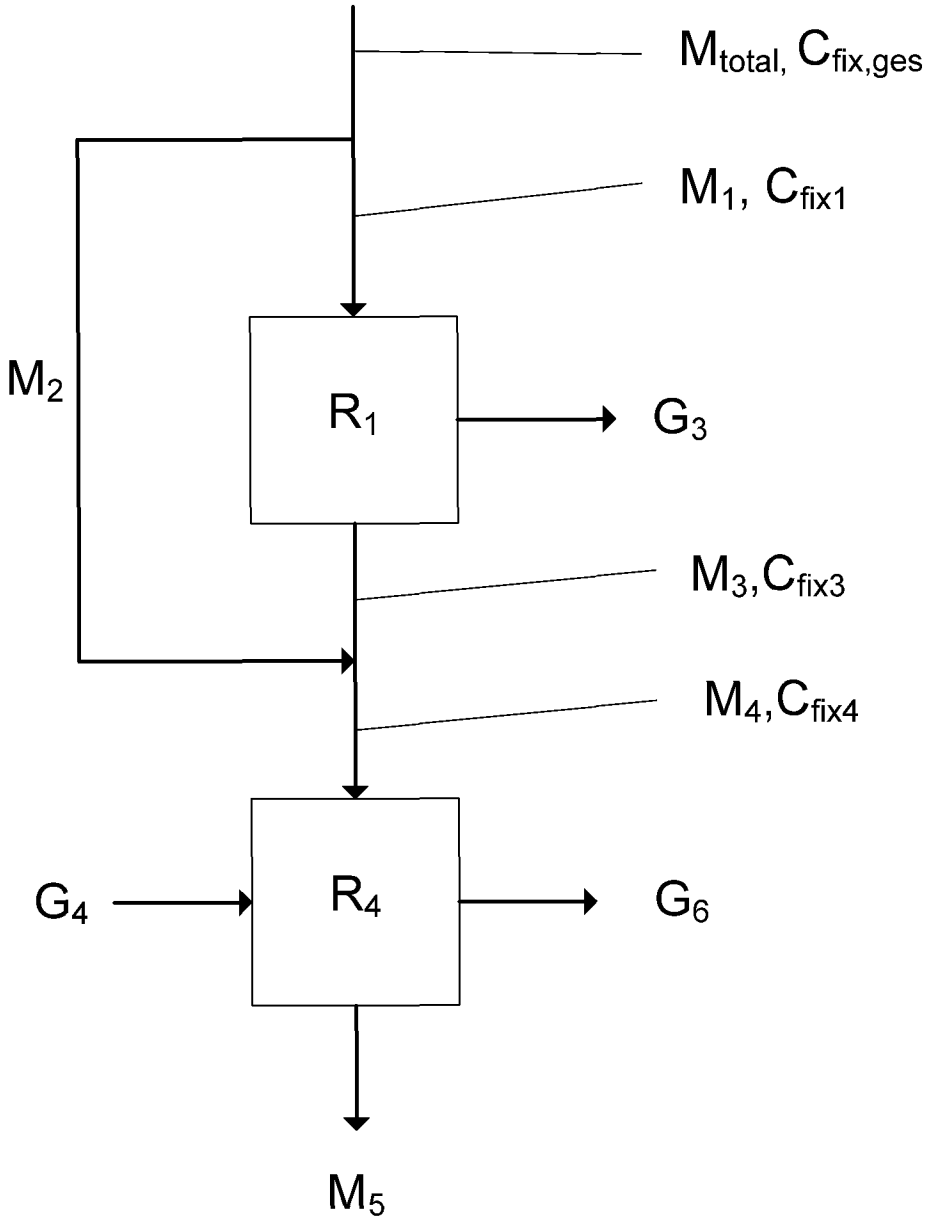

Fig. 1

INTERNATIONAL SEARCH REPORT

International application No
PCT/EP2014/071014

A. CLASSIFICATION OF SUBJECT MATTER
INV. C10J3/34
ADD.

According to International Patent Classification (IPC) or to both national classification and IPC

B. FIELDS SEARCHED

Minimum documentation searched (classification system followed by classification symbols)
C10J

Documentation searched other than minimum documentation to the extent that such documents are included in the fields searched

Electronic data base consulted during the international search (name of data base and, where practicable, search terms used)
EPO-Internal, WPI Data

C. DOCUMENTS CONSIDERED TO BE RELEVANT

Category*	Citation of document, with indication, where appropriate, of the relevant passages	Relevant to claim No.
X Y	EP 0 120 397 A2 (DEILMANN AG C [DE]) 3 October 1984 (1984-10-03) figure 1 page 6, lines 12-26 page 7, lines 1-14 -----	1,4-6 2,3
Y	DE 10 2011 011807 A1 (KIRCHNER HANS WALTER [DE]) 23 August 2012 (2012-08-23) figure 1 paragraphs [0020] - [0025] -----	2
Y	US 2009/260286 A1 (SASAUCHI KENICHI [JP] ET AL) 22 October 2009 (2009-10-22) figure 1 paragraphs [0024] - [0031] ----- -/--	3

[X] Further documents are listed in the continuation of Box C.

[X] See patent family annex.

* Special categories of cited documents :

"A" document defining the general state of the art which is not considered to be of particular relevance

"E" earlier application or patent but published on or after the international filing date

"L" document which may throw doubts on priority claim(s) or which is cited to establish the publication date of another citation or other special reason (as specified)

"O" document referring to an oral disclosure, use, exhibition or other means

"P" document published prior to the international filing date but later than the priority date claimed

"T" later document published after the international filing date or priority date and not in conflict with the application but cited to understand the principle or theory underlying the invention

"X" document of particular relevance; the claimed invention cannot be considered novel or cannot be considered to involve an inventive step when the document is taken alone

"Y" document of particular relevance; the claimed invention cannot be considered to involve an inventive step when the document is combined with one or more other such documents, such combination being obvious to a person skilled in the art

"&" document member of the same patent family

Date of the actual completion of the international search	Date of mailing of the international search report
9 December 2014	17/12/2014

Name and mailing address of the ISA/	Authorized officer
European Patent Office, P.B. 5818 Patentlaan 2 NL - 2280 HV Rijswijk Tel. (+31-70) 340-2040, Fax: (+31-70) 340-3016	Lachmann, Richard

2

Form PCT/ISA/210 (second sheet) (April 2005)

INTERNATIONAL SEARCH REPORT

International application No
PCT/EP2014/071014

C(Continuation). DOCUMENTS CONSIDERED TO BE RELEVANT

Category*	Citation of document, with indication, where appropriate, of the relevant passages	Relevant to claim No.
A	EP 2 412 788 A1 (CENTRAL RES INST ELECT [JP]) 1 February 2012 (2012-02-01) figure 1	1-6

Y	WO 01/68789 A1 (COWI RADGIVENDE INGENIORER AS [DK]; BENTZEN JENS DALL [DK]; HENRIKSEN) 20 September 2001 (2001-09-20)	2,3
A	figure 1	1,4-6

2

INTERNATIONAL SEARCH REPORT

Information on patent family members

International application No
PCT/EP2014/071014

Patent document cited in search report	Publication date	Patent family member(s)	Publication date
EP 0120397 A2	03-10-1984	DE 3310534 A1	04-10-1984
		EP 0120397 A2	03-10-1984
		US 4541345 A	17-09-1985
DE 102011011807 A1	23-08-2012	NONE	
US 2009260286 A1	22-10-2009	CN 101346455 A	14-01-2009
		JP 4790412 B2	12-10-2011
		JP 2007177106 A	12-07-2007
		US 2009260286 A1	22-10-2009
		WO 2007077685 A1	12-07-2007
EP 2412788 A1	01-02-2012	AU 2010228721 A1	27-10-2011
		CN 102227492 A	26-10-2011
		EP 2412788 A1	01-02-2012
		JP 5432554 B2	05-03-2014
		JP 2010222517 A	07-10-2010
		WO 2010109798 A1	30-09-2010
WO 0168789 A1	20-09-2001	AT 331015 T	15-07-2006
		AU 4047401 A	24-09-2001
		DE 60120957 T2	08-02-2007
		DK 1278813 T3	30-10-2006
		DK 200000417 A	16-09-2001
		EP 1278813 A1	29-01-2003
		WO 0168789 A1	20-09-2001