Jan. 26, 1965 S. BURROWS 3,166,916

REFRIGERATED CARTONS AND REFRIGERATING MEANS FOR USE THEREWITH

Filed Dec. 5, 1963 2 Sheets-Sheet 1

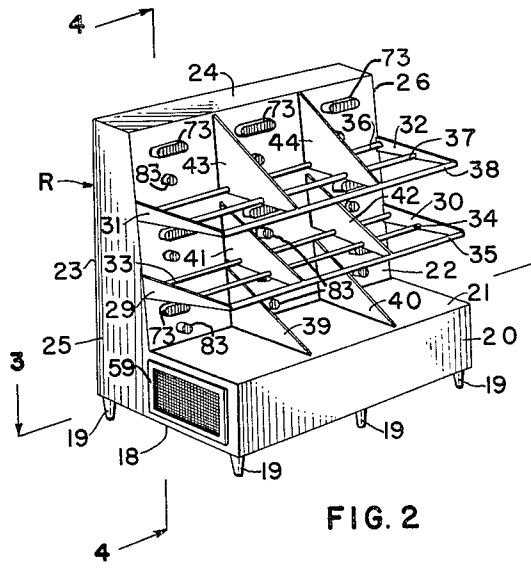

FIG. 2

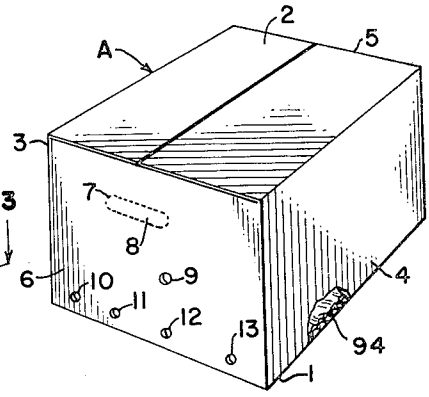

FIG. 1

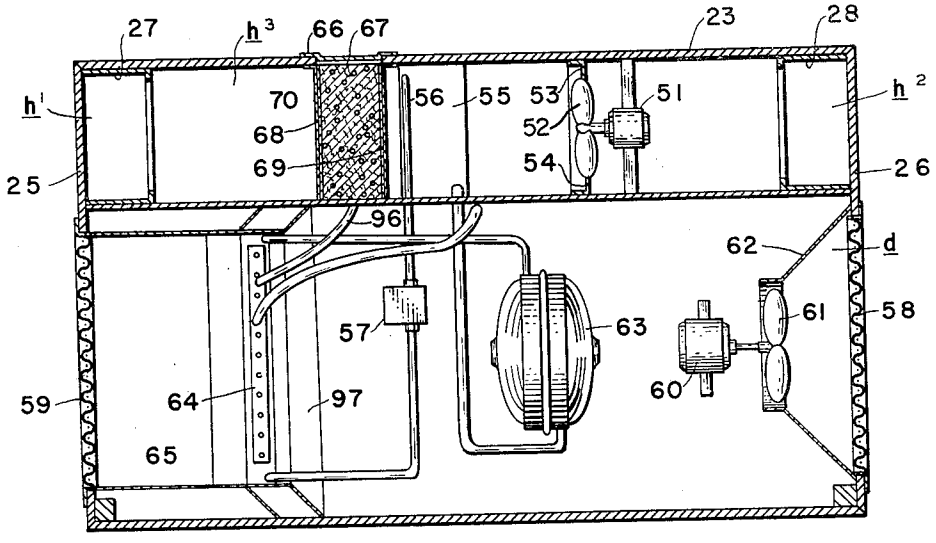

FIG. 3

INVENTOR.
SUMNER BURROWS

BY Alfred W. Petcha

ATTORNEY

Jan. 26, 1965 S. BURROWS 3,166,916

REFRIGERATED CARTONS AND REFRIGERATING MEANS FOR USE THEREWITH

Filed Dec. 5, 1963 2 Sheets-Sheet 2

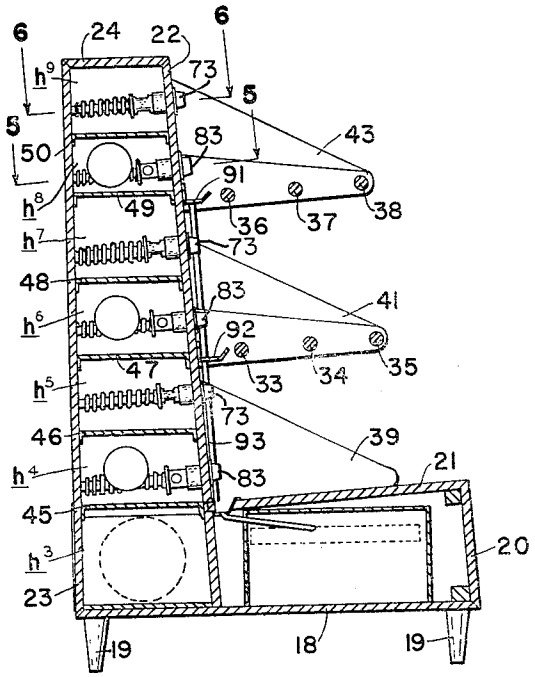

FIG. 4

FIG. 6

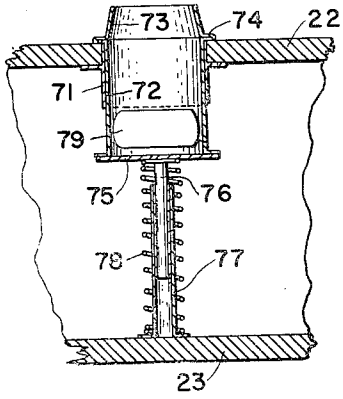

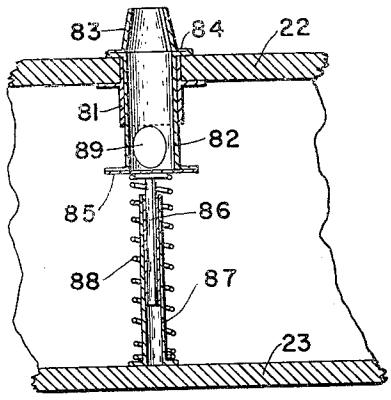

FIG. 5

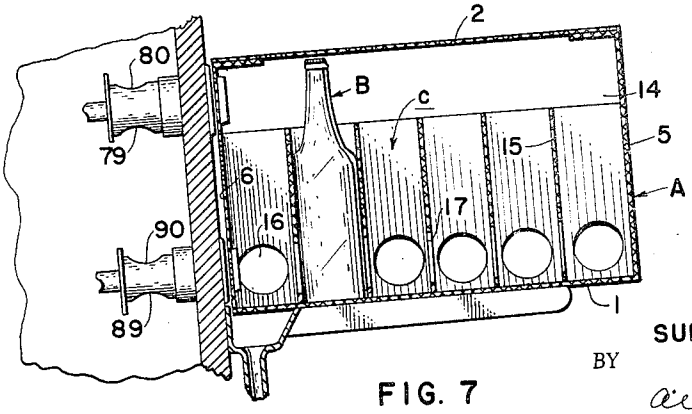

FIG. 7

INVENTOR.
SUMNER BURROWS
BY
Alfred W. Petcheft
ATTORNEY

United States Patent Office

3,166,916

Patented Jan. 26, 1965

3,166,916

REFRIGERATED CARTONS AND REFRIGERATING MEANS FOR USE THEREWITH

Sumner Burrows, 2400 Army St., San Francisco, Calif.

Filed Dec. 5, 1963, Ser. No. 328,240

9 Claims. (Cl. 62—237)

This invention relates in general to certain new and useful improvements in refrigerated cartons and, more particularly, to a refrigerated carton which may be used in combination with a retail display rack having means for refrigerating the cartons.

In the sale of beer and wine, it has become a fairly well established retail practice to package the bottles or cans in cartons made of corrugated cardboard or fiberboard. Some efforts have been made by retail grocery stores and liquor stores to refrigerate these packages so that when the retail customer purchases a case of beer, for example, the entire case will be cold and could be used immediately for a party or social gathering. Certain difficulties, however, have been encountered in this connection. In the first place, twelve or twenty-four bottles or cans of liquid represents a rather difficult refrigerating problem. If the cardboard shipping container is placed in an icebox, the cardboard or fiberboard out of which the shipping container is made, acts as an insulator and it is, therefore, necessary to keep such containers under refrigeration for a long period of time before the proper and desirable temperature is reached by the liquid in the bottles or cans. Moreover, it is rather difficult for a retailer to maintain a large enough refrigerated box to handle the ordinary requirements of this retail trade. On a busy weekend, a rather large number of cases of beer will be purchased and the conventional type of icebox or cooler must be relatively large.

Furthermore, many grocery stores and retail establishments selling this type of merchandise operate on a so-called "self-service" basis by which the customer will select his purchase and carry it up to the check-out counter for payment. Obviously, it is highly inefficient to provide a large cooler or icebox with glass doors that are opened and shut many times during the course of the day as the customers remove cases of beer or other similar merchandise. In addition to this, a conventional cooler is rather hard to service and requires a considerable amount of some employee's time to place warm cases of beer in the box and then keep replacing them as sales are made. This is particularly true since it takes such a long time for cases of beer and liquor to become cool to the desired degree for actual consumption and the customer has no way of knowing whether the particular case of beer which he has selected has been in the cooler for a sufficient length of time. Of course, early in the morning after the cooler has been filled up and cooling all night, customers may make purchases without concern, but, during the course of the day as the initial supply of cold cases in the cooler becomes depleted and the supply-clerks make replacements, it is very likely that the customer may select a relatively warm case of beer rather than a cold one and be disappointed when the contents is actually used.

Finally, in all self-service establishments, it is the merchant's desire to display the merchandise as freely as possible so that the retail customer may make purchases and selections with greatest ease and simplicity. When it is necessary to place cases of beer or liquor or other similar merchandise inside a cooler, the merchandise is to some extent concealed from view even when the cooler is constructed with large glass doors and has interior lighting. It has been found that customers are somewhat reluctant to open the door of conventional-

type coolers and remove some merchandise from the interior thereof. It is considered much more desirable to display the merchandise on open shelves or in open display bins so that the requirement for opening and shutting doors is eliminated.

It is, therefore, the primary object of the present invention to provide a shipping carton or container which may be refrigerated in a simple, speedy, and convenient manner, in the retail establishment at the point of purchase.

It is another object of the present invention to provide a container of the type stated and a display rack for use in combination therewith, whereby the contents of the containers may be continuously and quickly refrigerated while presenting them in an attractive retail display which is readily accessible to the retail customer.

It is another object of the present invention to provide a container and display rack of the type stated which are extremely efficient, economical, and require relatively little servicing on the part of the retail store employees.

With the above and other objects in view, my invention resides in the novel features of form, construction, arrangement, and combination of parts presently described and pointed out in the claims.

In the accompanying drawings

FIG. 1 is a perspective view of a shipping carton or container constructed in accordance with and embodying the present invention;

FIG. 2 is a perspective view of a display rack constructed in accordance with and embodying the present invention;

FIGS. 3 and 4 are horizontal and vertical sectional views taken respectively along lines 3—3 and 4—4 of FIG. 2;

FIGS. 5 and 6 are fragmentary sectional views taken along lines 5—5 and 6—6, respectively, of FIG. 4; and

FIG. 7 is an enlarged fragmentary sectional view of display rack and shipping container in cooperative use.

Referring now in more detail and by reference characters to the drawings, which illustrate practical embodiments of the present invention, A designates a shipping container for beer, liquor, and the like, which is conventionally fabricated from corrugated cardboard or fiberboard having the usual bottom wall 1, top wall 2, side walls 3, 4, and end walls 5, 6. The end wall 6 is provided centrally of its upper area with an elongated somewhat oval-shaped line of perforations 7 which defines a manually removable flap 8. The end wall 5 is also provided with an identical line of perforations 7 defining an identical flap 8 so that when the flaps 8 are manually removed from the end walls 5, 6, two convenient handholes will be provided so that the shipping container A may be picked up and carried about.

The end wall 6 is also provided in the lower portion of its area, and in off-center relationship to the vertical center line thereof, with a circular aperture 9. The end wall 6 is also provided with four small semicircular apertures 10, 11, 12, 13, which have straight lower margins located substantially in coincidence with the plane of the upwardly presented interior face of the bottom wall 1. These apertures 10, 11, 12, 13, are rotated equidistantly from each other and in symmetrical relationship, as a group, between the side walls 3, 4, all as best seen in FIG. 1 and for purposes presently more fully appearing.

Interiorly, the shipping container A is provided with four longitudinally extending partition-elements 14 which extend the full length and height of the interior of the container A, so as to be in marginal engagement with the interior faces of the bottom wall 1 and top wall 2 and end walls 5, 6. The partition-elements 14 are slitted upwardly from their lower margins for interlocking "egg-crate" type engagement with five transversely extending

partition-elements 15, which are of such length as to span the transverse interior of the shipping container A and be in marginal engagement with the interiorly presented faces of the side walls 3, 4. The partition-elements 15, however, extend upwardly from the bottom wall 1 for only a portion of the height of the container A sufficient to embrace the body of the bottle B placed therein, but, leave the upper portion within the region of the necks of the bottles, unpartitioned as shown in FIG. 7. The four longitudinally extending partition-elements 14 and the five transversely extending partition-elements 15 sub-divide the interior of the shipping container A into twenty-four bottle-receiving pockets or compartments *c* and, as will be noted by reference to FIG. 7, the longitudinally extending partition-elements 14 are each provided, adjacent their bottom margins, with six relatively large apertures 16 and, similarly, the partition-elements 15 are provided, adjacent their lower margins, with a series of apertures 17, for providing cross-communication at the lower level between the various compartments *c*.

Provided for cooperation with the shipping container A is a refrigerating display rack R which comprises a relatively heavy-gauge steel base plate 18 rigidly provided on its underface with a plurality of depending legs 19, by which the entire structure may be supported on the floor of a retail store. Welded or otherwise rigidly attached along its longitudinal margin to the forwardly presented horizontal margin of the base plate 18 is a front wall 20 and, similarly, welded or otherwise secured to the upper longitudinal margin thereof is a bottom wall 21 disposed in forwardly spaced relation to a face wall 22 and welded at its rearward longitudinal margin to the front face of the face wall 22, the latter being welded or otherwise rigidly secured along its lowermost margin to the upper face of the base plate 18 and extending upwardly in slightly rearwardly inclined angular relation thereto. It should be noted that the bottom wall 21 and face wall 22 are preferably in perpendicular relationship to each other. Therefore, the bottom wall 21 extends rearwardly and downwardly, at a slightly inclined angle to the base plate 18 and, finally, the front wall 20 is preferably perpendicular to the bottom wall 21 and, therefore, extends upwardly and rearwardly at an angle to the base plate 18 and is, moreover, parallel to the face wall 22. Similarly welded at its lower longitudinal margin to the rear horizontal margin of the base plate 18 and extending upwardly in perpendicular relation thereto is a back wall 23 which is similarly welded or otherwise rigidly attached along its upper horizontal margin to a top wall 24, the latter being, in turn, welded or otherwise rigidly secured to the upper horizontal margin of the face wall 22. Finally, the main structure of the rack R is completed by two somewhat L-shaped end walls 25, 26, which are marginally welded or otherwise rigidly secured to the outer margins of the base plate 18, front wall 20, bottom wall 21, face wall 22, back wall 23 and top wall 24, all as best seen in FIGS. 2 and 3.

The space within the back portion of the rack R, enclosed between the face wall 22, the back wall 23, the top wall 24, and the rear portion of the base plate 18, is sub-divided vertically at its opposite ends into two outwardly extending header chambers h^1, h^2, by means of U-shaped channels 27, 28, formed of heavy-gauge sheet metal and welded both to the base plate 18 and to the interior surfaces of the face wall 22, the back wall 23, and top wall 24, thereby imparting substantial strength to the entire structure. Rigidly secured to the face wall 22 at or directly adjacent to the plane of the end walls 25, 26, and projecting forwardly therefrom are paired sets of bracket arms 29–30 and 31–32, which are cross-connected by horizontally extending sets of parallel rods 33–34–35, 36–37–38. The set of rods 33–34–35 are disposed in parallel relation to the plane of the bottom wall 21 and are spaced upwardly therefrom by a distance

somewhat greater than the vertical height of the shipping container A. Similarly, the set of rods 36–37–38 are parallel to the set of rods 33–34–35 and are spaced upwardly therefrom by a distance which is equal to the vertical distance between the set of rods 33–34–35 and the bottom wall 21. Finally, the top wall 24 is spaced upwardly from the set of rods 36–37–38, by a distance approximately equal to the vertical height of a shipping container A. Marginally welded to and set into the dihedral angle between the bottom wall 21 and the face wall 22 are two triangular partitions 39, 40, which subdivide the bottom wall 21 and face wall 22 into three equal vertical columns, the dimension of which is slightly greater than the distance between the side walls 3, 4, of the shipping container A. Similarly attached to the face wall 22 and the sets of rods 33–34–35 and 36–37–38 are auxiliary partitions 41–42 and 43–44. The partitions 41, 43, are substantially coplanar with the partition 39 and the partitions 42, 44, are substantially coplanar with the partition 40, all as best seen in FIG. 2.

The interior space within the back portion of the rack R between the inwardly presented opposed parallel faces of the channels 27, 28, is subdivided into seven horizontally extending cross-headers h^3, h^4, h^5, h^6, h^7, h^8, h^9, by means of vertically spaced horizontal cross plates 45, 46, 47, 48, 49, and 50, each of which is provided along its longitudinal margins with down-turned flanges which are welded to the interior faces of the back wall 23 and face wall 22. As will be seen by reference to FIG. 4, the cross plates 45, 47, and 49, are located approximately the same vertical height as the bottom wall 21, the set of rods 33–34–35, and the set of rods 36–37–38, respectively. The cross plate 46 is located midway between the cross plates 45, 47. The cross plate 48 is located midway between the cross plates 47, 49. The cross plate 50 is located approximately midway between the cross plate 49 and the top wall 24.

The web of the channel 27 is provided with apertures opening into the header chambers h^3, h^5, h^7, and h^9. similarly, the web of the channel 28 is provided with apertures opening into the header chambers h^3, h^4, h^6, and h^8.

Operatively mounted within the header chamber h^3 is a conventional electric fan 51 having a rotary blade 52 which is operatively disposed within the circular aperture 53 of a partition 54, the latter subdividing the head chamber h^3 so that when the electric fan 51 is energized it will create an air flow transversely across the head chamber h^3 from the header chamber h^2 to the header chamber h^1. In the space between the fan blade 52 and the header chamber h^1 is a conventional refrigerative evaporator coil 55 having the usual capillary tube 56 connected to a conventional control device 57, the latter being mounted in the forward portion of the base structure, that is to say, the compartment *d* which extends lengthwise between the end walls 25, 26, and is defined by front wall 20, the bottom wall 21, the lower portion of the face wall 22 and the forward portion of the base plate 18. As will be seen by reference to FIG. 3, the portions of the end walls 25, 26, which extend closurewise across the compartment *d* are provided with air-grilles 58, 59, and an electric fan 60 is operatively mounted in the compartment *d* with its blade 61 rotatively disposed in a venturi element 62 which flares outwardly and embraces the grill 58. Thus, when the fan 60 is energized the blade 61 will draw air inwardly through the grill 58 and cause it to flow in a stream across the compartment *d* past a conventional compressor 63 and through the coils and fins of a conventional condenser 64. The face of the condenser 64, which is removed from the fan 60, is connected by a duct 65 to the grill 59 so that all of the air which flows across the compartment *d* will pass outwardly through the grill 59 and the condenser 64 will be cooled by this stream of air.

Preferably, though not necessarily, the back wall 23 is

provided with a removable snap-fitted closure plate 66 removably disposed within an aperture 67 located between the evaporator 55 and the channel 27. The portion of the header chamber h^3 which is adjacent to the opening 67 is provided with a plurality of cross-rails 68, 69, which slidably receive a rectilinear foraminous desiccator cartridge 70. The face walls of the desiccator cartridge 70 are made of some type of open-mesh screen material and confine a loosely packed granular mass of calcium chloride silica-gel beads. The desiccator cartridge 70 is of such type that it will remove moisture from the air traveling across the header chamber h^3 (from right to left as shown in FIG. 3). Thus, when the rack R is in operation, the fan 51 will be energized and air will be continuously drawn downwardly through the head chamber h^2 and propelled across the header chamber h^3 into and up through the header chamber h^1.

As will be noted by reference to FIG. 2, the face wall 22 of the rack R is divided into nine compartments for receiving nine shipping containers A. It will, of course, be understood that the rack R can be designed to accommodate any number of cases which may be found convenient and the fact that the rack R, as shown, merely accommodates nine cases or shipping containers A, is merely a matter of choice. However, for purposes of description herein each of the nine case-accommodating areas of the face wall 22 is identical and, therefore, it is only necessary to describe one of such areas. Rigidly mounted in each case-accommodating area of the face wall 22 is a tubular sleeve 71 which is of horizontally elongated oblong contour and slidably accommodates a supply-spout 72 which is also tubular and of elongated somewhat oval-shaped cross-section adapted to fit snugly within the hand-hole 8 of the shipping container A, being provided at its forward end with a somewhat tapered nozzle-portion 73 and a peripheral stop-collar 74. The supply-spout 72 projects inwardly from the supporting sleeve 71 into the header chamber h^9 and on its interior end is rigidly provided with a closure plate 75. Welded or otherwise rigidly secured centrally of the closure plate 75 is a rearwardly extending rod 76 which is slidably mounted in a guide tube 77, the latter, in turn, being rigidly mounted at its rear end on the inwardly presented face of the back wall 23. Disposed encirclingly around the guide tube 77 and rod 76 is a compression spring 78 which bears, at its rear end, against the back wall 23 and at its forward end against the rear face of the plate 75 so as to urge the supply-spout 72 forwardly in outwardly projecting relation to the face wall 22. The rear end of the supply-spout is flanged outwardly for the dual purpose of engaging the peripheral portions of the plate 75 and also for acting as a stop to limit forward movement of the supply-spout 72. The supply-spout 72 is provided in its rear portion with a plurality of apertures 79, 80, which are of such size and locations as to be completely concealed or enclosed within the rearward portion of the sleeve 71 and the supply-spout 72 is projected into forward-lying position by the spring 78. When, however, the supply-spout 72 is pushed backwardly so that its collar 74 rests against the outwardly presented surface of the face wall 22, i.e., the position shown in FIG. 6, the apertures 79, 80, will communicate with the interior of the header chamber h^9 and allow chilled air which is traveling upwardly through the header chamber h^1 and across the header chamber h^9 to flow outwardly through the discharge spout 72.

Similarly mounted in and extending through the face wall 22 is a second sleeve 81 which is substantially identical to the previously described sleeve 71, except that it is located in downwardly spaced relation thereto and is of substantially circular cross-sectional shape for accommodating a tubular return-spout 82 which extends slidably through the sleeve 81 and is provided on its forwardly projecting end with a tapered nozzle-element 83 adapted to fit snugly within the aperture 9 of the

shipping container A. At its forward end the return-spout 82 is provided with an outwardly extending peripheral stop-collar 84 and around its inwardly projecting end is flanged outwardly to receive a closure plate 85. Rigidly secured to and projecting inwardly from the closure plate 85 is a rod 86 which is slidably mounted in a guide tube 87, the latter being, in turn, rigidly mounted upon the interior face of the back wall 23. Encirclingly disposed around the guide tube 87 and rod 86 is a compression spring 88 which normally urges the return spout 82 into forwardly projecting position within the sleeve 81 in the same manner as the supply-spout 72. Similarly, the rear portion of the return-spout 83 is provided with apertures 89, 90, which are normally enclosed within the rearward portion of the sleeve 81 when the return-spout 83 is in forwardly project position under influence of the spring 88. It will also be noted that the return-spout 83 projects into the header chamber h^8 so that when the supply-spout 72 is pushed inwardly, i.e., to the position shown in FIG. 5, the apertures 89, 90, will communicate with the header chamber h^8 and return air will be drawn through the return-spout 83 into the header chamber h^8 and thence downwardly through the header chamber h^2 for recirculation through the header chamber h^3 and across the evaporator 55.

It will, of course, be evident that when a shipping container A is placed on the shelf-forming rods 35–37–38 with its end wall 6 presented toward the face wall 22, the hand-hole 8 and aperture 9 will respectively line up with and sit upon the tapered portion 73 and tapered portion 83, respectively. When the shipping container A is pushed all the way in until it rests substantially against the face wall 22, the supply-spout 72 and return-spout 82 will be pushed inwardly so that chilled air will be circulated across the top of the shipping container A and sucked back through the bottom thereof, thereby quickly and effectively refrigerating the contents.

Rigidly mounted on the face wall 22 directly beneath each set of rods 33–34–35 and 36–37–38 are horizontal drain-gutters 91, 92, which are centrally connected by a vertical drain-tube 93 which extends downwardly and through the bottom wall 21, discharging upon the face of the condenser 64. These drain-gutters 91, 92, are located directly beneath the apertures 10, 11, 12, 13, of the shipping containers A, so that any condensate which may collect upon the surfaces of the bottles B within the shipping container A will drip down onto the bottom wall 1 and ultimately run out of the apertures 10, 11, 12, into the drain-gutters 91, 92, and thence downwardly through the drain-tube 93 to be dissipated by evaporation upon the surfaces of the condenser 64. In this connection, it should be noted that the upper or interior face of the bottom wall of the shipping container A, should be coated with a water-proofing resin, wax, or other similar material, or may be covered with an aluminum foil lamination 94 so that the condensate will not damage the physical strength of the bottom wall 1. It has been found by actual experience that the amount of condensate which collects is relatively minor and will not damage or materially weaken even an ordinary uncoated or unprotected piece of corrugated cardboard or fiberboard but the protective coating or foil laminate 94 is a relatively inexpensive and desirable precaution.

Since a certain amount of condensate will also collect on the coil of the evaporator 55, a small moisture-catching tray 95 is placed beneath the evaporator 55 and is connected by a tube 96 to an elongated gutter-like receptacle 97, rigidly welded or otherwise mounted on the framework of the condenser 64 so as to be in heat-exchange relationship therewith. Since the condenser 64 will become rather hot, during actual operation, the heat transmitted to the gutter-like receptacle 97 is sufficient to dissipate any liquid condensate which drains from the evaporator 55.

In use, the rack R is loaded, in the manner above de-

scribed, with a series of filled shipping containers A and the contents of each shipping container A will be duly refrigerated by a circulation of chilled air therethrough. Whenever a customer or clerk removes a shipping container from the rack R the act of removal will release the supply-spout **72** and return-spout **82** which are connected with such shipping container A. Thereupon, the springs **78**, **88**, will urge the disconnected supply-spout **72** and return-spout **82** forward into closed position so that no chilled air will be lost from, or unauthorized warm air drawn into, the system. It has been found, in connection with the present invention, that if a shipping container A is allowed to remain on the rack R for as long as thirty to forty-five minutes, the contents will be thoroughly chilled and will remain chilled for several hours thereafter, since the corrugated cardboard or fiberboard, out of which the shipping container A is constructed, has a substantial amount of heat-insulated value.

It has also been found, in connection with the present invention, that the shipping container A may also be used in an additional way. If, for example, the shipping container A is filled with bottles of wine which should be chilled thoroughly before serving, it is possible to sit the shipping container A down upon its end wall **5** so that the end wall **6** is presented upwardly. A suitably shaped funnel can then be placed in the hand-hole **8**, the aperture **9**, or both, and finely shaved ice poured into the shipping container A in sufficient quantity to surround the bottles housed therein. By tapping the exterior walls of the shipping container A as the shaved ice is being poured into it, a rather substantial charge of shaved ice can be worked into the shipping container A with a moment of work. Thereupon, the outer face of the end wall **6** can be wiped dry and the openings **8**, **9**, **10**, **11**, **12**, and **13**, sealed by pieces of gummed tape. Similarly, the hand-hole **8** in the other end wall **5** may be sealed with gummed tape, thereby preventing unauthorized leakage of any water which may result from melting of some of the shaved ice between the time that the shipping container A is "iced up" and the time that it is opened, to permit removal therefrom of the chilled bottles of wine. If the shipping container A is intended for use in the latter manner, it has been found desirable to coat the entire interior surfaces thereof with some kind of water-repellant resin or wax or to line the interior thereof with a metal foil laminate.

It should be understood that changes and modifications in the form, construction, arrangement, and combination of the several parts of the refrigerated cartons and refrigerating means for use therewith may be made and substituted for those herein shown and described without departing from the nature and principle of my invention.

Having thus described my invention, what I claim and desire to secure by Letters Patent is:

1. Means for refrigerating containers of products for human consumption such as bottled beverages and the like; said means comprising in combination a shipping carton containing a plurality of such containers, said carton having openings to permit circulation of air through the carton, a support having a back wall provided with outwardly projecting shelf-like means upon which the carton is removably mounted, said back wall being also provided with duct-forming members sized for operative connection with said openings in the cartons, and means for circulating chilled air through said duct-forming means into and out of the cartons.

2. Means for refrigerating containers of products for human consumption such as bottle beverages and the like; said means comprising in combination a shipping carton containing a plurality of such containers, said carton having openings to permit circulation of air through the carton, and an open display rack having a back wall provided with outwardly projecting shelf-like means upon which the carton is removably mounted, said back wall being also provided with duct-forming members sized for operative connection with said openings in the cartons, a valve means for closing the duct-forming members when the carton in operative connection thereto is removed, and a means for circulating air through said duct-forming members into and out of the cartons.

3. Means for refrigerating containers of products for human consumption such as bottled beverages and the like; said means comprising in combination a shipping carton containing a plurality of such containers, said carton having openings to permit circulation of air through the carton, and an open display rack having a back wall provided with outwardly projecting shelf-like means upon which the carton is removably mounted, said back wall being also provided with duct-forming members sized for operative connection with said openings in the cartons, a spring-biased valve means for closing the duct-forming members when the carton in operative connection thereto is removed, and a means for circulating air through said duct-forming members into and out of the cartons.

4. A display rack for refrigerating containers of products for human consumption; said rack comprising a base platform having a longitudinally extending forward margin, an upright back wall structurally connected at its lower end to and extending along a portion of the base rearwardly from the forward margin thereof, said back wall being provided with an air supply duct and an air return duct, means for impelling air from the air return duct to the air supply duct whereby to establish an airstream therebetween, shelf-like means extending outwardly over the base platform and being adapted for supporting at least one of said containers, a refrigeration unit operatively mounted on the base platform and having cooling means disposed within the air-stream flowing from the air return duct to the air supply duct whereby to refrigerate the portion of the air-stream flowing to the air supply duct, and first and second means on the back wall for entry into said container, said first means communicating with the air-supply duct and said second means communicating wtih the air return duct whereby to cause a continuous stream of refrigerated air to flow into said container.

5. A display rack for refrigerating containers of products for human consumption, said rack comprising a base platform having a longitudinally extending forward margin, an upright back wall structurally connected at its lower end to and extending along a portion of the base rearwardly from the forward margin thereof, said back wall being provided with an air supply duct and an air return duct, means for impelling air from the air return duct to the air supply duct whereby to establish an airstream therebetween, a plurality of shelf-like elements extending outwardly over the base platform and being adapted for supporting a plurality of said containers, a refrigeration unit operatively mounted on the base platform and having cooling means disposed in heat exchange relationship within the air-stream flowing from the air return duct to the air supply duct whereby to refrigerate the portion of the air-stream flowing to the air supply duct, and first and second means on the back wall for entry into each container, said first means communicating with the air-supply duct and said second means communicating with the air return duct whereby to cause a continuous stream of refrigerated air to flow into said container.

6. A display rack for refrigerating containers of products for human consumption, said rack comprising a base platform having a longitudinally extending forward margin, an upright back wall structurally connected at its lower end to and extending along a portion of the base rearwardly from the forward margin thereof, said back wall being provided with an air supply duct and an air return duct, means for impelling air from the air return duct to the air supply duct whereby to establish an airstream therebetween, shelf-like means extending out-

wardly over the base platform and being adapted for supporting at least one of said containers, a refrigeration unit operatively mounted on the base platform and having cooling means disposed in heat exchange relationship within the air-stream flowing from the air return duct to the air supply duct whereby to refrigerate the portion of the air-stream flowing to the air supply duct, first and second means on the back wall for entry into said container, said first means communicating with the air-supply duct and said second means communicating with the air return duct whereby to cause a continuous stream of refrigerated air to flow into said container, and gutter-forming means located upon the back wall and extending beneath the container to catch any condensate which may drip from the container while it is being refrigerated.

7. A display rack for refrigerating containers of products for human consumption, said rack comprising a base platform having a longitudinally extending forward margin, an upright back wall structurally connected at its lower end to and extending along a portion of the base rearwardly from the forward margin thereof, said back wall being provided with a vertical air supply duct and a vertical air return duct, said ducts being disposed in spaced parallel relation, at least one transversely extending air supply header connected to the air supply duct, at least one transversely extending air return header connected to the air return duct, means for impelling air from the air return duct to the air supply duct whereby to establish an air-stream therebetween, shelf-like means extending outwardly over the base platform and being adapted for supporting at least one of said containers, a refrigeration unit operatively mounted on the base platform and having cooling means disposed in heat exchange relationship within the air-stream flowing from the air return duct to the air supply duct whereby to refrigerate the portion of the air-stream flowing to the air supply duct, and first and second means on the back wall for entry into said container, said first means communicating with the air supply header and said second means communicating with the air return header whereby to cause a continuous stream of refrigerated air to flow into said container.

8. A display rack for refrigerating containers of products for human consumption, said rack comprising a base platform having a longitudinally extending forward margin, an upright back wall stducturally connected at its lower end to and extending along a portion of the base rearwardly from the forward margin thereof, said back wall being provided with a vertical air supply duct and a vertical air return duct, said ducts being disposed in spaced parallel relation, at least one transversely extending air supply header connected to the air supply duct, at least one transversely extending air return header connected to the air return duct, means for impelling air from the air return duct to the air supply duct whereby to establish an air-stream therebetween, a plurality of shelf-like elements extending outwardly over the base

platform and being adapted for supporting a plurality of said containers, a refrigeration unit operatively mounted on the base platform and having cooling means disposed in heat exchange relationship within the air-stream flowing from the air return duct to the air supply duct whereby to refrigerate the portion of the air-stream flowing to the air supply duct, and first and second means on the back wall for entry into each container, said first means communicating with the air supply header and said second means communicating with the air return header whereby to cause a continuous stream of refrigerated air to flow into said container.

9. A display rack for refrigerating containers of products for human consumption, which containers have first and second apertures in a wall thereof, said rack comprising a base platform having a longitudinally extending forward margin, an upright back wall structurally connected at its lower end to and extending along a portion of the base rearwardly from the forward margin thereof, said back wall being provided with an air supply duct and an air return duct, means for impelling air from the air return duct to the air supply duct whereby to establish an air-stream therebetween, shelf-like means extending outwardly over the base platform and being adapted for supporting at least one of said containers, a refrigeration unit operatively mounted on the base platform and having cooling means disposed in heat exchange relationship within the air-stream flowing from the air return duct to the air supply duct whereby to refrigerate the portion of the air-stream flowing to the air supply duct, and first and second outwardly projecting tubes on the back wall, a first sleeve slidably mounted within the first tube for entry into the first aperture of said container, a second sleeve slidably mounted within the second tube for entry into the second aperture of the container, said sleeves being normally biased outwardly into a closed position and being adapted, upon insertion into the container apertures, to be pushed inwardly to an open position, said first tube communicating with the air supply duct and said second tube communicating with the air return duct whereby to cause a continuous stream of refrigerated air to flow into said container when the sleeves are inserted into the container and thereby pushed to open position.

References Cited by the Examiner

UNITED STATES PATENTS

2,341,150	2/44	Locke	220—21
2,511,877	6/50	Protzeller	62—298
2,743,836	5/56	Roberts	220—21
2,774,230	12/56	Kasser	62—60
2,915,884	12/59	Haushalter	62—237

ROBERT A. O'LEARY, *Primary Examiner.*

WILLIAM J. WYE, *Examiner.*