May 26, 1959 G. A. BAUMET 2,888,617

MAGNETIC TOOL HOLDER

Filed April 19, 1954

FIG. 1

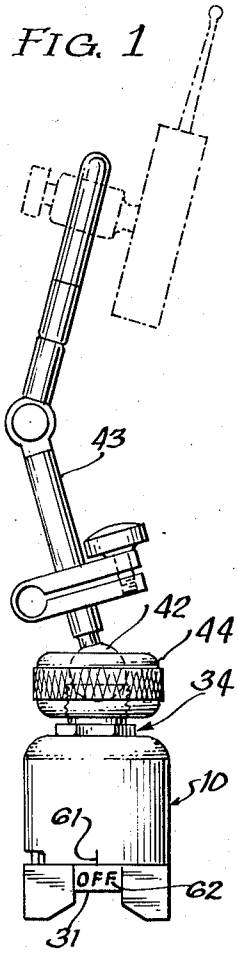

FIG. 3

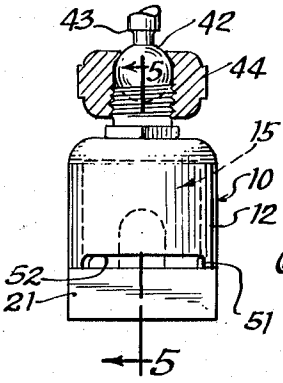

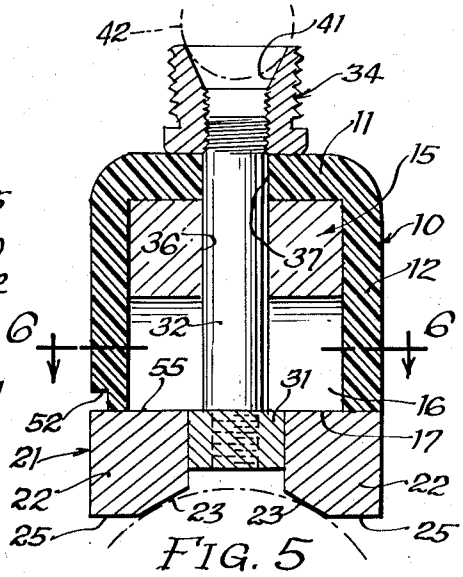

FIG. 5

FIG. 2

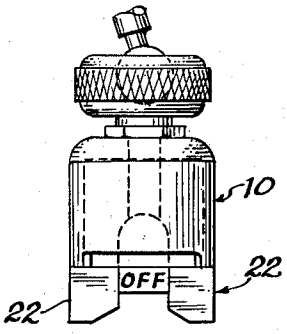

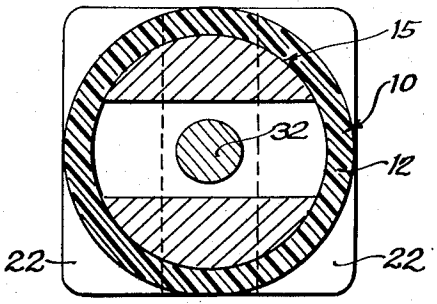

FIG. 6

FIG. 4

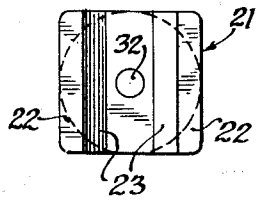

FIG. 7

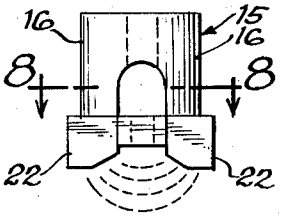

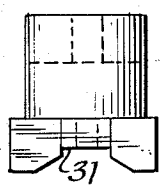

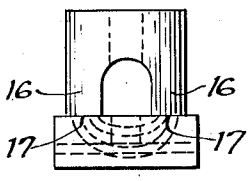

FIG. 9 FIG. 10

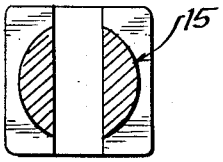

FIG. 8

INVENTOR.
George A. Baumet
BY
Leonard S. Crawford
Att'y

United States Patent Office 2,888,617 Patented May 26, 1959

2,888,617

MAGNETIC TOOL HOLDER

George A. Baumet, Chicago, Ill., assignor to George A. Baumet and Edward W. Elste, doing business as Metal Masters Company, Chicago, Ill.

Application April 19, 1954, Serial No. 423,902

5 Claims. (Cl. 317—159)

This invention concerns a magnetic device, sometimes known as a "magnetic tool holder," adapted to the detachable securement of a temporarily positioned device to a ferromagnetic support. In particular it has reference to a unit of this character for use by tool and die makers for fixing the position of a dial indicator, for example, while effecting readings with the same.

Devices of the foregoing class are well-known and in common utilize a permanent magnet so mounted as to enable the attachment thereto of a desired implement or facility and the carrying, usually in a temporary manner, of the magnet on a magnetically susceptible surface. However, most of these devices are unequipped with means for facilitating detachment. Since, in nearly all cases the magnetic material possesses high coercivity, e.g. Alnico V, removal of the device by a manual force applied normally to the parent surface is generally difficult and aggravating. To meet this problem various prior devices have included means for short-circuiting the flux whereby removal consists simply of introducing the short-circuiting path by manipulation of a mechanical part. However, such devices known to me have been unduly bulky, thereby introducing weight into a device which is desirably to be rendered as light and compact as possible.

Accordingly, the principal objects of this invention are to provide a magnetic tool holder of the foregoing character which is compact, simple, inexpensive, simple in manipulation and embodying that sort of "sales appeal" regarded as important in an item sold primarily to tool and die makers whose sense of discrimination in purchasing the tools of their trade is well-known.

Another object is to provide a magnetic holder incorporating positive means for shunting the flux so that the "on" position is represented by movement of a part to one positive stop and the "off" position is obtained by opposite movement against another positive stop thereby rendering unnecessary any careful indexing operation by the user.

A further object is to provide a device as aforesaid which includes pole pieces adapted for application to a flat surface or to a curved surface without any alteration in its parts.

Other objects will become evident from the ensuing description which, taken with the accompanying drawing, discloses a preferred mode of embodying the invention in practice.

In this drawing:

Fig. 1 is a side elevation of the device shown as carrying a support for a dial indicator, and in "off" position;

Fig. 2 is a similar partial view in the "on" position;

Fig. 3 is a view similar to that of Fig. 2 with certain parts shown in cross section to illustrate the means for clamping the adjunct carried by the device;

Fig. 4 shows a bottom plan view;

Fig. 5 is a cross-sectional view taken on the line 5—5 of Fig. 3;

Fig. 6 is a cross-sectional view taken on the line 6—6 of Fig. 5;

Fig. 7 is an elevation in detail to show the relation between the pole piece assembly and the core in the "on" position;

Fig. 8 is a cross-section taken on the line 8—8 of Fig. 7;

Fig. 9 is a view similar to that of Fig. 7 except that the parts are shown in "off" position; and,

Fig. 10 is a side elevation of the parts of Fig. 9 to indicate the shunted flux in the "off" position.

Broadly regarded, the invention contemplates the provision of a horse shoe shaped permanently magnetic core of cylindrical exterior configuration carried in a non-magnetic housing. The core is bored to receive rotatably a non-magnetic stud having a T-head upon each of the sides whereof is carried a ferromagnetic shoe or pole-piece for abutment with the surface of the ultimate support. The stud is arranged to protrude through the casing and to receive means for holding implements and attachments of various kinds. Stop means are provided for the pole-piece assembly and housing whereby in one relative position the pole-pieces are aligned with the poles of the magnet for the "on" condition and, in the 90° displaced position, the pole-pieces are transversely of the magnet poles to shunt the flux and to serve as a keeper. The juxtaposition of the housing, magnet and pole-piece assembly occurs on a flat plane devoid of openings through which iron filings and other foreign matter may enter the virtually zero gap between the poles and pole-pieces and which would otherwise introduce an air gap and a decrease in the holding strength of the device.

Turning now to the drawing there is shown a preferably hollow cylindrical housing on shell **10** of non-magnetic material; e.g. plastic composition, including an end wall **11** and side wall **12**. Received tightly within the interior thereof is a cylindrical permanent magnet **15** of horse shoe configuration including poles **16—16** having faces **17—17** (Fig. 10). Any suitable one of the many commercial permanent magnet materials may be employed, e.g. Alnico V. Faces **17—17** are ground co-planar and perpendicular to the central axis of the magnet.

A pole-piece assembly **21** is comprised of a pair of ferromagnetic, generally parallelepipedic pole-pieces **22—22** of mild steel or its equivalent, and is perferably chamfered or beveled at **23—23** whereby the device is more readily adapted to affixation on a curved surface. For flat surfaces the faces **25—25** are employed. Pole-pieces **22—22** are brazed or otherwise united with the non-magnetic head **31** of a cylindrical stud **32**, also of non-magnetic material, which terminates at its upper extremity in a threaded portion engaged by a nut **34**. The thread may terminate at a shoulder to limit the innermost position of the nut **34** whereby clearance is afforded for free relative rotation of the magnet **15** and pole-piece assembly **21**. Bores **36** and **37** are provided in the magnet **15** and housing **10** for passage of the stud **32**.

Nut **34** is adapted for attachment of the adjuncts with which the invention device cooperates. For example, the nut **34** may be provided with a frusto-conical seat **41** to receive a spherical end **42** of a dial indicator post **43**, there being a knurled, threaded ring **44** engaged over the nut **34** to complete the assembly, as will be understood. Thus the invention may serve to hold a dial indicator on the carriage of a lathe, for example, pending centering of the work piece in the chuck.

To facilitate positive setting of the pole-piece assembly **21** on its "on" and "off" positions I provide a pin **51** in one of the pole-pieces **22** arranged to coact with the ends of a 90° arcuate recess **52** formed in the end of the housing **10**. Thus, relative rotation of the magnet and pole-pieces is limited by abutment of the

pin 51 at each end of the recess 52. By forming the recess in the lateral exterior face of the housing entry of foreign matter into the joint 55 is inhabited. For like reason the faces of the magnet and housing are machined true and flat perpendicularly to the axis of rotation, as is the abutting face of the pole-piece assembly 21 whereby to reduce to a minimum undesirable reluctance in the flux path.

Referring to Fig. 7 in particular the flux for the "on" position is shown as emanating from the poles 16—16, passing through the pole-pieces 22—22 and thence through the parent surface (not shown). In Fig. 10 the "off" position is indicated as a 90° rotation of the pole-pieces and the resultant shunting the flux therethrough and away from the parent surface. It will be apparent that, when the device is to be prepared for use, rotation is effected by grasping the housing and pole-piece assembly with the fingers and twisting them whereas, when the device is to be taken out of use, only the housing need be rotated against the holding force. For convenience an index 61 and indicia 62 may be provided on the housing 10 and head 31.

While I have shown a particular embodiment of my invention, it will be understood, of course, that I do not wish to be limited thereto since many modifications may be made, and I therefore contemplate by the appended claims to cover any such modifications as fall within the true spirit and scope of my invention.

I claim:

1. A magnetic holder for tools or the like for supporting the same on a ferromagnetic surface comprising a permanent magnet having a generally U-shaped configuration, the legs whereof constitute the poles and terminate in adjacent north and south, co-planar pole faces, an assembly of a pair of substantially parallelepipedic, elongated, parallel, spaced-apart, ferromagnetic pole pieces having respective faces co-planar and contiguous to said pole faces and support-contacting face opposite said contiguous faces and a non-magnetic spacing member interposed between said pole pieces in the longer direction thereof and secured thereto for maintaining the same in parallel, spaced relationship, means for carrying said assembly for rotation with respect to said magnet on an axis intermediate the legs thereof and perpendicular to the said co-planar faces of said pole pieces, said spacing member having a dimension in the direction of said axis less than the correspondingly measured dimension of the pole pieces to define a recess between said pole pieces whereby the holder may be magnetically attached to a flat surface or a cylindrical surface, said pole pieces being adapted, in one position, to span said pole faces to shunt said poles and, when positioned perpendicular to said first position, to form extensions of said poles, said means including clamping means for detachably securing the tool thereto.

2. The combination in accordance with claim 1 wherein said pole pieces are bevelled on their respective confronting longer, outer edges adjacent said spacing member to provide an angular relation between the bevelled faces greater than 90° and less than 180°.

3. The combination in accordance with claim 1 wherein said stud means includes a stud secured to said spacing member, said magnet having an aperture for rotatably receiving said stud.

4. The combination in accordance with claim 1 further characterized by the provision of a non-magnetic, cup-shaped housing for snugly receiving said magnet for joint rotation of said housing and magnet about said axis, the rim of the housing being co-planar with the pole faces and said pole pieces having said common contiguous plane also contiguous to said rim and at least coextensive therewith to provide, at the contiguous planes, a substantially dust-tight joint protecting the contiguous surfaces of the pole faces and pole pieces against fouling by foreign matter.

5. A magnetic holder for tools and the like for supporting the same on a ferromagnetic surface comprising a hollow, cylindrical, non-magnetic housing, a horse-shoe-shaped permanent magnet fixedly mounted in said housing, the faces of the poles thereof being coplanar with each other and with one end of the housing, a pole-piece assembly mounted for rotation relative to said housing and disposed at said end thereof, said assembly including a pair of spaced-apart, parallel, ferromagnetic pole-pieces having respective co-planar faces contiguous to said pole faces, and stop means mutual to said assembly and housing for limiting rotational movement to an angle of 90°, whereby in one extreme relative position said pole-pieces are effectively extensions of said poles and in the other relative extreme position serve to short circuit the flux from said poles, said means comprising a recess in said housing end and a pin carried by said assembly disposed in said recess for abutment against one or the other ends of said recess.

References Cited in the file of this patent

UNITED STATES PATENTS

2,280,437	Levesque	Apr. 21, 1942
2,360,928	Beechlyn	Oct. 24, 1944
2,609,835	Horvay	Sept. 9, 1952
2,686,371	Flis	Aug. 17, 1954