W. E. OLSON.

PROCESS FOR DYEING RUGS AND LIKE ARTICLES.

APPLICATION FILED MAY 20, 1914.

1,198,373.

Patented Sept. 12, 1916.

3 SHEETS—SHEET 1.

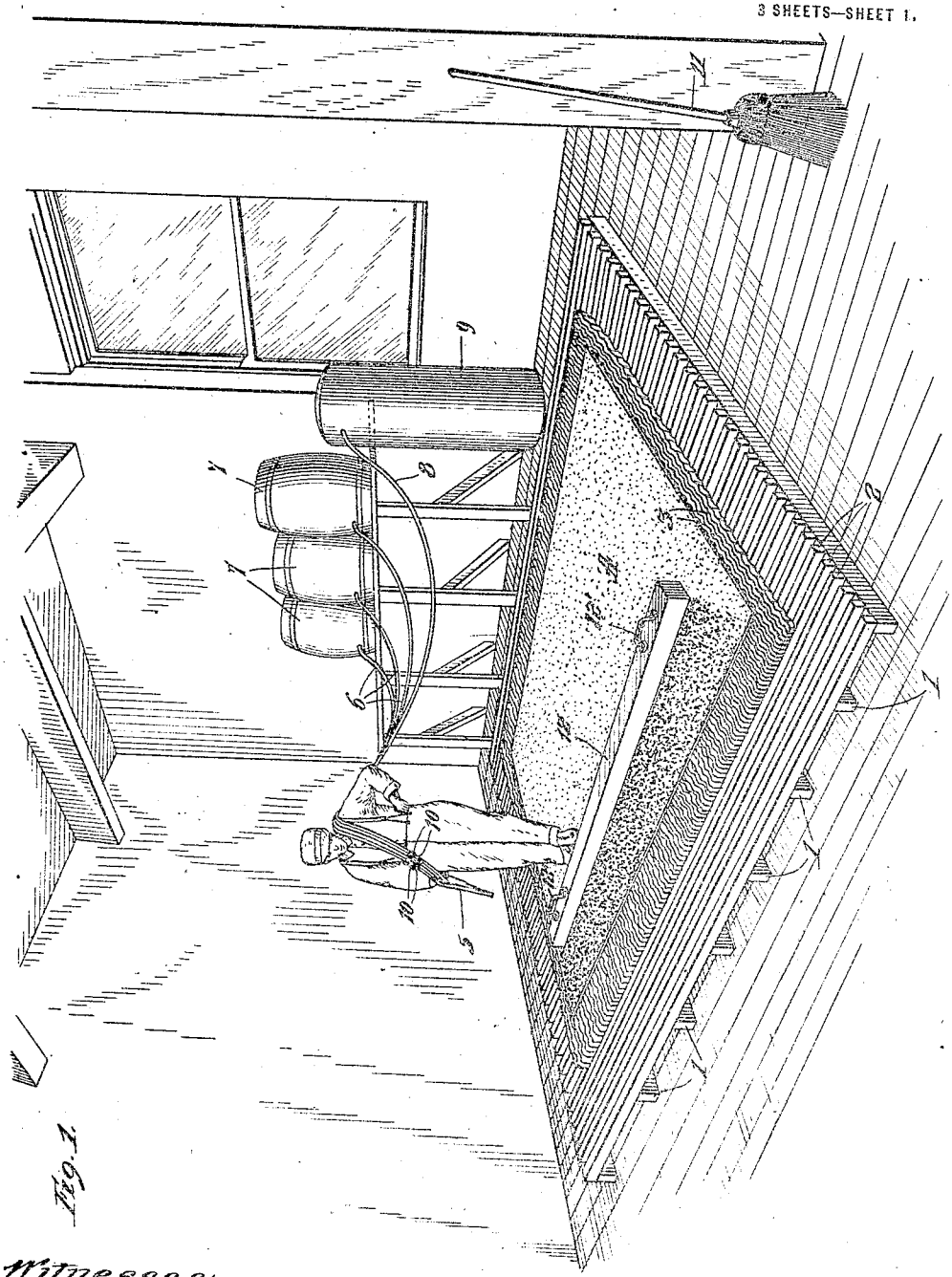

Fig. 1.

Witnesses:
H. S. Brice
A. A. Olson

Inventor,
Walter E. Olson,
by Joshua R. H. Potts
his Attorney.

W. E. OLSON.

PROCESS FOR DYEING RUGS AND LIKE ARTICLES.

APPLICATION FILED MAY 20, 1914.

1,198,373.

Patented Sept. 12, 1916

3 SHEETS—SHEET 2.

Fig. 3.

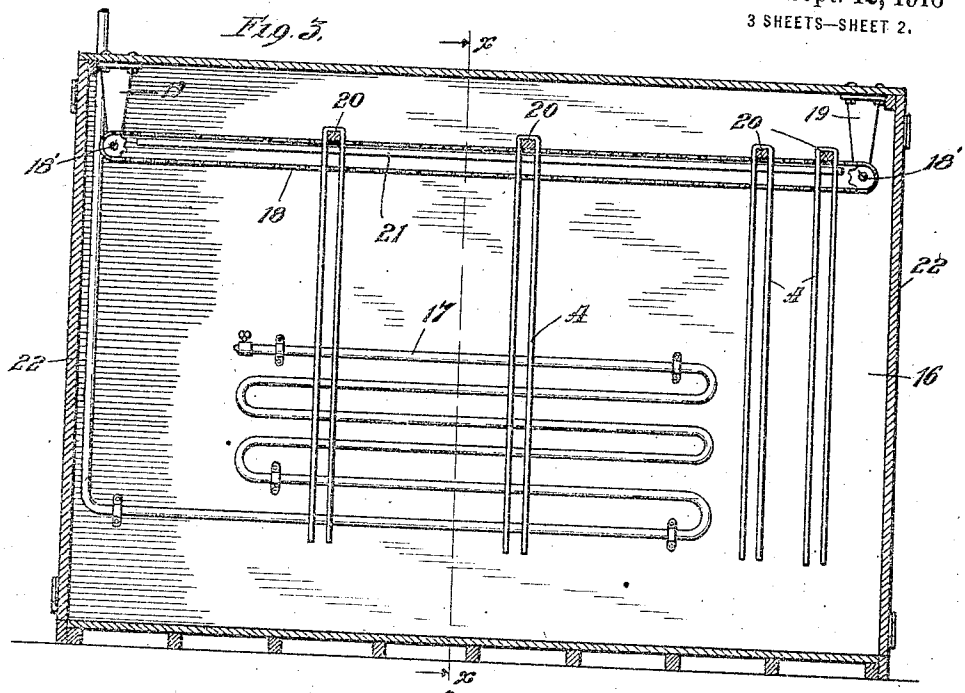

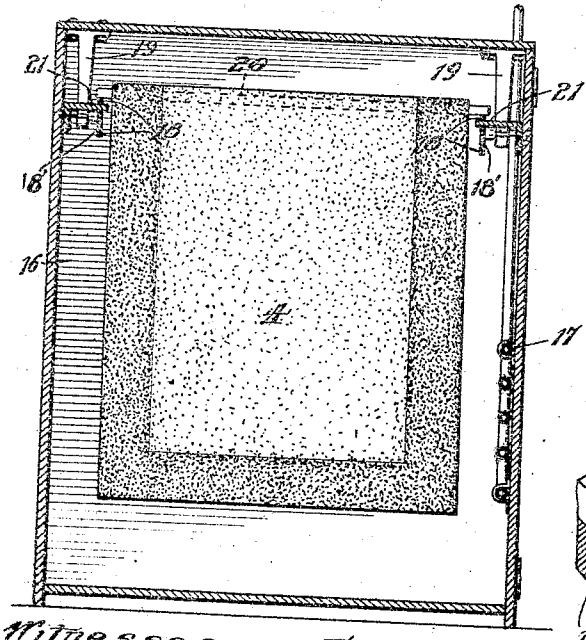

Fig. 4.

Fig. 2.

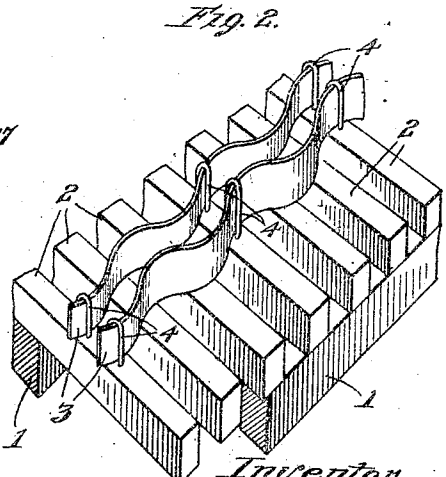

Witnesses:

H. S. Bull

A. A. Olson

Inventor,
Walter E. Olson,

by Joshua R. H. Potts

his Attorney

W. E. OLSON.

PROCESS FOR DYEING RUGS AND LIKE ARTICLES.

APPLICATION FILED MAY 20, 1914.

1,198,373.

Patented Sept. 12, 1916.

3 SHEETS—SHEET 3.

Fig. 5.

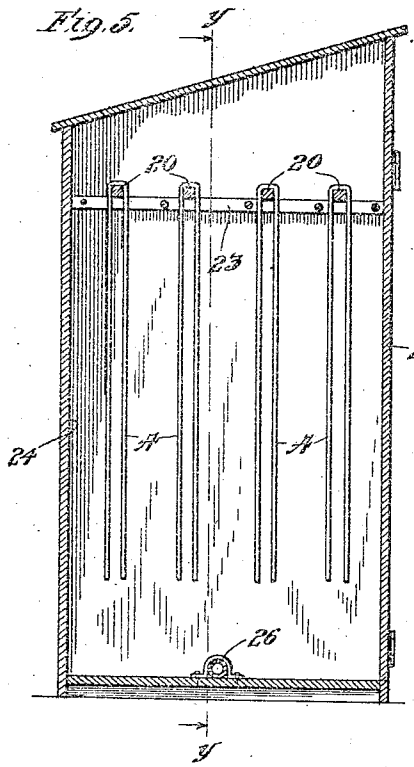

Fig. 6.

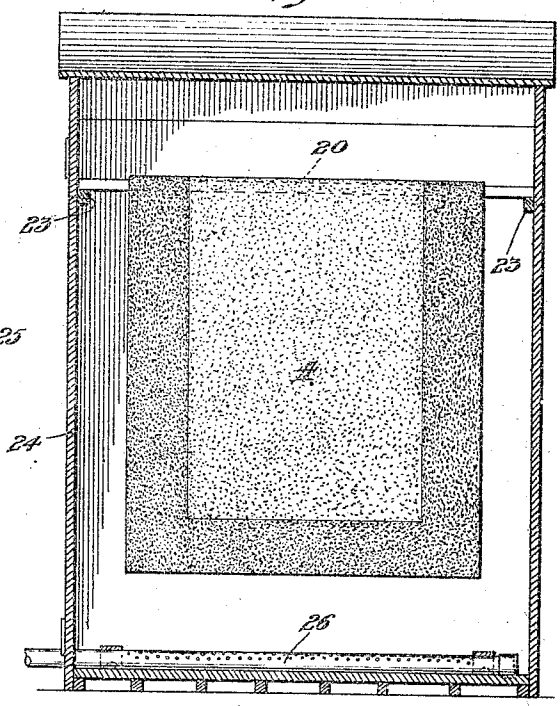

Fig. 7.

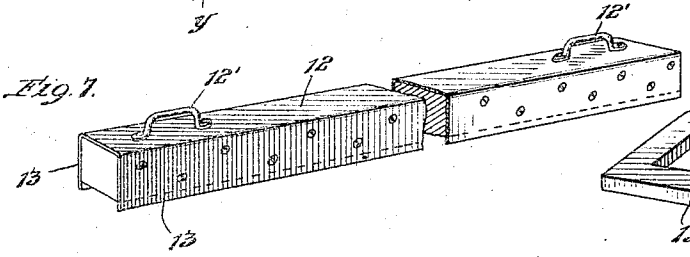

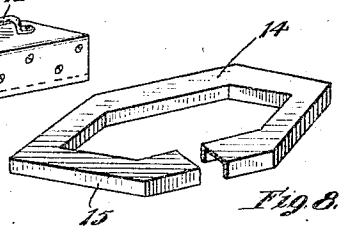

Fig. 8.

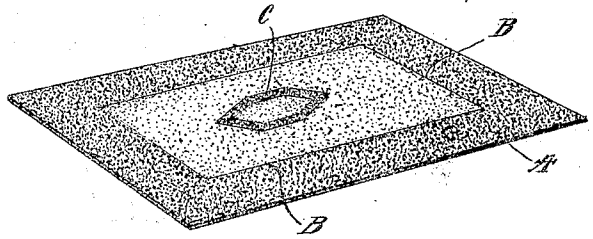

Fig. 9.

Witnesses:
H. S. Bell.
A. A. Olson.

Inventor
Walter E. Olson,
by Joshua R. H. Fox
his Attorney

UNITED STATES PATENT OFFICE.

WALTER EUGENE OLSON, OF CHICAGO, ILLINOIS.

PROCESS FOR DYEING RUGS AND LIKE ARTICLES.

1,198,373. Specification of Letters Patent. Patented Sept. 12, 1916.

Application filed May 20, 1914. Serial No. 839,830.

To all whom it may concern:

Be it known that I, WALTER E. OLSON, a citizen of the United States, and a resident of the city of Chicago, county of Cook, and State of Illinois, have invented a new and useful Process for Dyeing Rugs and like Articles, of which the following is a specification.

My invention relates to a process for dyeing rugs and has for its object the production of a process whereby rugs may be dyed with ease and expedition.

A further object is the production of a process as mentioned which will be efficient and whereby rugs may be dyed at a low cost.

Other objects will appear hereinafter.

With these objects in view my invention consists in the process hereinafter described and claimed.

The invention will be best understood by reference to the accompanying drawings forming a part of this specification, and in which—

Figure 1 is a perspective view illustrating the first step in the rug dyeing operation and the apparatus used, Fig. 2 is an enlarged fragmentary perspective view of the rug supporting platform shown in Fig. 1, Fig. 3 is a central longitudinal section of the rug drying device included in the invention, Fig. 4 is a section taken on line x—x of Fig. 3. Fig. 5 is a central vertical section of the chamber in which the rugs are subjected to a vapor bath in the dye fixing operation, Fig. 6 is a section taken on line y—y of Fig. 5, Fig. 7 is an enlarged detail perspective view of the straight edge marking member used in the dyeing operation, Fig. 8 is a perspective view of one of the stencils employed, and Fig. 9 is a perspective view of a rug which has been dyed through the present process.

In carrying out my invention the rug A which it is desired to dye is first laid flat upon a horizontally disposed supporting element consisting, as shown in Figs. 1 and 2, of a platform made up of spaced parallel stringers 1 and spaced parallel strips 2 arranged at right angles to said stringers and secured to the upper edges thereof. Upon said platform is arranged a sort of foraminated mat consisting of a plurality of spaced parallel tortuous metallic strips 3 which are secured to the upper sides of the platform members 2 by means of staples 4.

The dye, which is in liquid form, is applied to the upper surface of the rug by means of an atomizer or spraying gun 5 with which communicate flexible pipes or hoses 6 leading to dye reservoirs 7, said reservoirs containing dyes of various colors. Also communicating with the atomizer 5 is a flexible pipe or hose 8, which leads to a compressed air tank 9. Interposed in each of the pipes 6 and 8 adjacent the atomizer 5 is a valve or cock 10 whereby the operator may control the flow therethrough as will be readily understood. In use the liquid dye, by reason of the compressed air passing through the atomizer, is projected from the latter in a fine spray which is directed onto the upper surface of the rug as shown in Fig. 1. By adjusting the valves 10 it will be seen that the rug may be dyed any color corresponding with that of the dyes in the reservoirs 7 or any color which may be secured by combining these colors. The mixing of the colors is effected by opening two or more of the valves 10 in pipe 6, the differently colored liquid dyes entering the atomizer from said pipes being thoroughly mingled in their passage of the atomizer. If desired the valves controlling the flow of dye may be located in and made a part of the atomizer or gun and be operated by the fingers of the hand in which the device is held. After the upper surface of the rug has been thus sprayed with the dye, said surface is thoroughly brushed by means of a broom 11 in order to uniformly distribute the dye over said surface and also in order to force the dye well into the nap of the rug. If it is desired to dye both sides of the rug, the latter, after the upper side has been treated as mentioned, needs only to be reversed and the dye applied to the reverse side in the same manner as before.

If it is desired to form a border B around the edge of the rug a straight edge marking device 12 is employed which is laid upon the surface of the rug spaced from the edge thereof so as to serve as a means of marking the inner edge of the border as will be readily understood. The border is formed by simply spraying an additional quantity of dye upon this portion of the rug in order to more deeply color the same, or if desired a dye of a different color may be sprayed onto this portion of the rug in order to form a border of a different color. At the opposite longitudinal edges of the marking mem-

ber 12 are provided plates 13 which project below the under surface thereof forming flanges which are adapted to sink into the nap of the rug in order to prevent creeping of the dye under said marking device in the border forming operation as will be readily understood. The marking member 12 is also provided at its upper side with handles 12′ to facilitate the handling thereof. Also if it is desired to form a design or border in the rug such as is shown at C in Fig. 9 a stencil 14 of the design or pattern desired may be laid upon the rug in order to shield a portion thereof and thus result in the formation of a design or pattern corresponding with that of the stencil. A stencil of this style will be used ordinarily where a plurality of dyes are sprayed onto the rugs in succession in order to secure a desired color. Where this is done the stencil may be employed say after the first dye has been applied to the rug which will result in a pattern or design of this color, the remainder of the rug being dyed a different color upon the subsequent application of differently colored dyes. The stencil used will be provided at its edges with depending flanges 15 adapted to sink into the nap of the rug and serve the same function as the lower edges of the plates 13 of the marking member 12 as above set forth.

After the rug has been dyed as described the same is subjected to a process for fixing the dye. In this process a drying chamber 16 is employed in which is arranged a steam pipe 17 for introducing dry steam to said chamber as will be readily understood. In the upper end of the chamber 16 are arranged two spaced endless chains 18 traveling around sprocket wheels 18′ supported by depending brackets 19. The rugs A, after removal from the platform upon which the same have been dyed, are arranged upon bars or poles 20, said bars carrying the rugs being placed in the chamber 16 with the ends of said bars supported upon the upper sides of the chains 18 as clearly shown in Figs. 3 and 4. Said upper sides of said chains are supported to prevent sagging by means of reinforcing plates 21 which project from the adjacent walls of said chamber. The ends of said chamber are provided with hinged doors 22 through which access may be gained to said chamber for inserting the rugs into said chamber and removing the same therefrom. In practice the rugs are introduced at one end of said chamber, being conveyed therethrough by the chains 18 which are power driven and removed from the opposite end of said chamber. The rugs are permitted to remain in the drying chamber for twenty-four to forty-eight hours or until the same are thoroughly dry.

After removal from the drying chamber, the poles 20 carrying the rugs are lifted to position upon supporting flanges or strips 23 which are provided at opposite sides of a chamber 24, the front side of said chamber being provided with a hinged door 25 for gaining access thereto. In the chamber 24 is arranged a perforated pipe 26 for introducing wet or saturated steam into said chamber. The vapor of the steam thus introduced condenses upon the surface of the rug forming a thin film of hot water which completes the dye fixing operation. The rugs are permitted to remain in the chamber 24 only a short time, the vapor being condensed thereon immediately upon introduction of the rugs into said chamber. The film of water which is deposited upon the rugs does not saturate the latter, being deposited only upon the outer surfaces thereof so that upon removal of said rugs from said chamber the same dry in a very few moments.

Through the medium of the apparatus and process set forth rugs may be dyed with great rapidity and at a comparatively low cost.

In rug dyeing processes generally in use at the present time the rug to be dyed is completely immersed in the dye which is placed in a receptacle for this purpose. It is of course apparent that where this is done it is impossible to judge just the exact amount of dye necessary to completely immerse the rug or rugs, as the case may be, there always being some of the dye remaining after the dyeing operation, which of course is wasted. With the present process, however, where the dye is sprayed upon the rug, this source of waste is eliminated inasmuch as only so much of the dye as is actually used or applied to the rugs in the spraying operation is withdrawn from the dye reservoir with which the atomizer or spraying gun is connected.

Through the use of air under high pressure in the spraying operation, the dye is projected from the atomizer or gun with considerable velocity which forces it beyond the mere surface of the rug operated upon and well into the body of the same. A rug supporting element of the construction set forth presents an upper surface for contact with the rug which is formed of a plurality of spaced narrow elongated surfaces of small extent, the advantage of this arrangement being that rugs may be dyed different colors in rapid succession upon said supporting element without the fear of the wet dye of one rug adhering to the supporting element being transferred to the next rug arranged upon said supporting member in such quantities as to be noticed, the extent of the portions of the supporting element which contact with the rug being so small that any wet dye adhering thereto

and which is transferred to the next rug would be practically unnoticed. Also by reason of the foraminated construction of the platform the dye which accumulates upon the vertical edges of the members 2 and 3 will drop therefrom and thus the platform will serve to clean itself.

While I have illustrated and described the preferred process for carrying my invention into effect, this is capable of variation and modification without departing from the spirit of the invention. I, therefore, do not wish to be limited to the precise steps of the process set forth, but desire to avail myself of such variations and modifications as come within the scope of the appended claims.

Having described my invention what I claim as new and desire to secure by Letters Patent is:

1. The process for dyeing rugs or like articles which consists in first applying the dye to the rug; then subjecting the rug to a drying action; and then subjecting it to a vapor bath for a period of time sufficient to effect the deposit of a film of water only on the outer surface of the rug, substantially as described.

2. The process for dyeing rugs or like articles which consists in first applying the dye to the rug; then subjecting the rug to a drying action; and then applying a film of water thereto only upon the outer surface thereof, substantially as described.

3. The process for dyeing rugs or like articles which consists in first spraying a liquid dye onto the outer surface of the rug with the latter lying flat in a substantially horizontal plane, in applying said dye non-uniformly to the surface of the rug in order to produce a border or pattern of a different shade from the body of the rug; and in then subjecting the rug to a process for fixing the dye, substantially as described.

4. The process for dyeing rugs or like articles which consists in first spraying a liquid dye onto the rug; in then distributing the dye over the surface of the rug and forcing the same into the nap of the rug, and then subjecting the rug to a process for fixing the dye, substantially as described.

5. The process for dyeing rugs or like articles which consists in first spraying a liquid dye onto the rug; then brushing the surface of the rug to distribute the dye thereover and force the same into the nap of the rug; and then subjecting the rug to a process for fixing the dye, substantially as described.

6. The process for dyeing rugs or like articles which consists in first applying a liquid dye to the rug; then subjecting the rug to the action of dry steam to dry the same; and then subjecting the rug to a bath of wet steam, substantially as described.

7. The process of dyeing rugs or like articles which consists in first applying a liquid dye to the rug; in then subjecting the rug to the action of dry steam until the rug and dye are thoroughly dry; and in then subjecting the rug to a bath of wet steam, substantially as described.

8. The process for dyeing rugs or like articles which consists in first spraying a liquid dye onto the rug with the latter lying flat in a substantially horizontal plane; then brushing the surface of the rug to distribute the dye thereover and force the same into the nap of the rug; then subjecting the rug to the action of dry steam until the rug and dye are thoroughly dry; and then subjecting the rug to a bath of wet steam, substantially as described.

9. The process for dyeing rugs or like articles which consists in spraying a liquid dye onto the outer surface of the rug to produce configurations on the rug; and in then subjecting the rug to a process for fixing the dye, substantially as described.

10. The process for dyeing rugs or like articles which consists in spraying liquid dye onto the outer surface of the rug in successive steps to produce configurations on the rug and in then subjecting the rug to a process for fixing the dye, substantially as described.

11. The process for dyeing rugs or like articles which consists in spraying a liquid dye upon the rug by means of a compressed air atomizer held comparatively close to the rug, whereby the force of the air carries the dye into the body of the rug; and then subjecting the rug to a process for fixing the dye, substantially as described.

In testimony whereof I have signed my name to this specification in the presence of two subscribing witnesses.

WALTER EUGENE OLSON.

Witnesses:
J. E. HECKEL,
M. BARNETT.