M. H. AVRAM.

POWDER BOX.

APPLICATION FILED AUG. 16, 1911.

1,040,991. Patented Oct. 15, 1912.

Fig. 1.

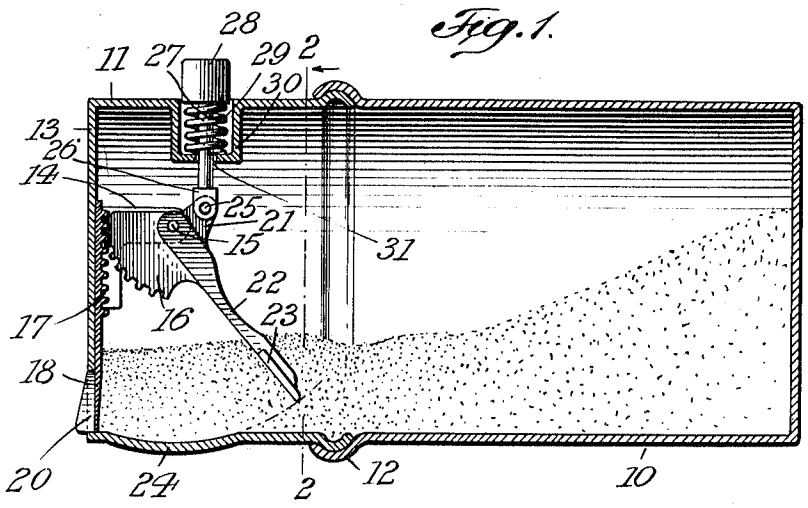

Fig. 2.

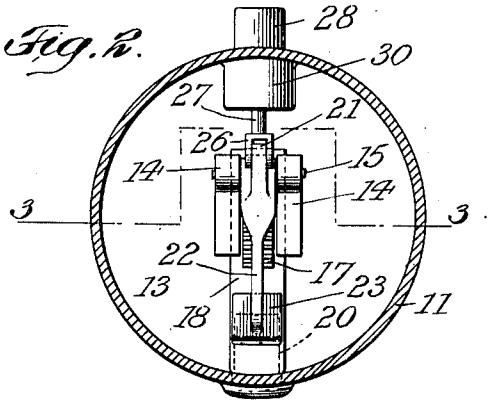

Fig. 3.

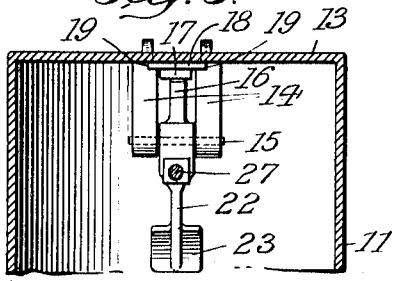

Witnesses:
Julius A. Katz.
Katheryne Koch

Inventor
Mois H. Avram
By his Attorneys
Briesen & Gumpe

UNITED STATES PATENT OFFICE.

MOÏS H. AVRAM, OF NEW YORK, N. Y.

POWDER-BOX.

1,040,991. Specification of Letters Patent. Patented Oct. 15, 1912.

Application filed August 16, 1911. Serial No. 644,431.

To all whom it may concern:

Be it known that I, MOÏS H. AVRAM, a citizen of the United States, residing at New York city, county and State of New York, have invented a new and Improved Powder-Box, of which the following is a specification.

This invention relates to a powder box, more particularly adapted for holding tooth powder, face powder and similar substances and so constructed that the use of but a single hand is necessary for manipulating the box, that a predetermined quantity of powder is discharged at each manipulation, and that the discharge opening is automatically closed after each delivery.

In the accompanying drawing: Figure 1 is a longitudinal section through a powder box embodying my invention; Fig. 2 a cross section on line 2—2, Fig. 1; and Fig. 3 a horizontal section on line 3—3, Fig. 2.

The powder box comprises essentially a lower section or powder receptacle 10 and an upper section or cover 11 containing the powder discharge mechanism, the parts 10, 11 being preferably permanently connected by a crimp joint 12. The latter is closed after receptacle 10 has been charged with powder, so that a refilling is rendered infeasible after said charge has been spent. To the head 13 of section 11 are firmly secured a pair of spaced perforated brackets 14 that support a transverse pin 15. Upon the latter is free to turn a toothed sector 16 that engages a rack 17 of a slide or gate 18, guided in corresponding ways 19 of brackets 14 and movable along the inner side of head 13. Gate 18 when lowered closes a powder discharge orifice 20 formed in head 13 and indicated by dotted lines in Fig. 2 as being of oblong shape, though it is obvious that the orifice may be of any other desired configuration. So also other means may obviously be substituted for the toothed sector and rack to operate the gate. Sector 16 is provided with a lug 21 and an arm 22 carrying at its free end a scoop or ejector 23 adapted to sweep along a concaved section 24 of cover 11 and thus feed the powder to be discharged toward opening 20. To lug 21 is pivoted at 25 the forked inner end 26 of a plunger 27 carrying at its outer end a knob or push button 28 which is engaged by a spring 29 tending to force said knob outward. Spring 29 is preferably accommodated within a circular socket 30 of cover 11, the inner diameter of said socket slightly exceeding the outer diameter of knob 28, while a perforation 31 in the socket-bottom permits the passage of plunger 27.

If it is desired to discharge powder from the box, the latter is grasped with one hand and is so held that its top is downwardly inclined with the opening 20 occupying the lowermost position. Knob 28 is then depressed with one finger of the same hand that holds the box to open gate 18 and to simultaneously swing ejector 23 toward opening 20 thereby discharging a predetermined quantity of powder etc. through said opening. Upon the release of knob 28, spring 29 will automatically close gate 18 and return the ejector to its original position, so that the parts are ready for the next manipulation.

It will be seen that the operation of my powder box requires the use of but a single hand, and that a predetermined quantity of powder is always discharged upon a complete depression of knob 28, so that waste is avoided. Furthermore the box is always closed when not in use, as spring 29 will automatically retract the gate after the release of the knob, so that the entrance of dust, moisture etc. into the box is effectively prevented.

I claim:

A powder box having a discharge orifice, a toothed sector pivoted within the box, means for actuating the sector, a slidable gate controlling the discharge orifice, a rack on the gate engaged by the sector, and an ejector carried by the sector.

MOÏS H. AVRAM.

Witnesses:
FRANK V. BRIESEN,
KATHERYNE KOCH.