Nov. 8, 1966 F. E. JIRIK ET AL 3,283,896

SORTING APPARATUS

Filed Sept. 28, 1964 3 Sheets-Sheet 1

FIG. 1

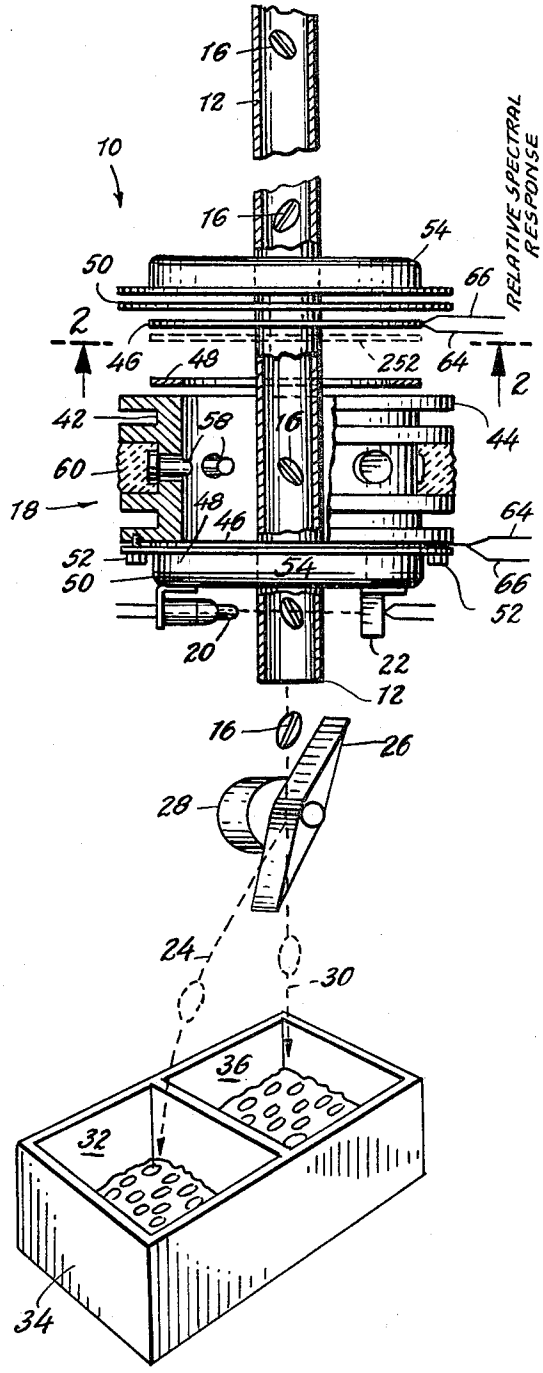

FIG. 3

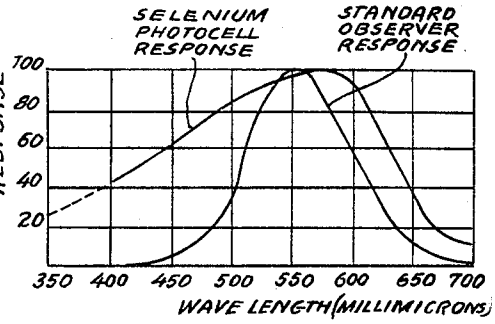

FIG. 2

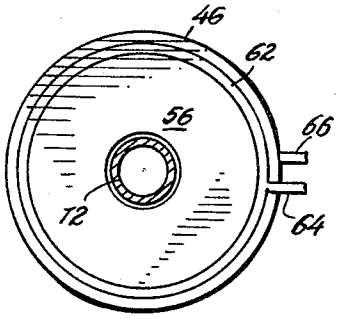

INVENTORS:
FRANK E. JIRIK
RICHARD A. WOOD
BY
Curtis, Morris & Safford
ATTORNEYS

Nov. 8, 1966 F. E. JIRIK ET AL 3,283,896

SORTING APPARATUS

Filed Sept. 28, 1964 3 Sheets-Sheet 2

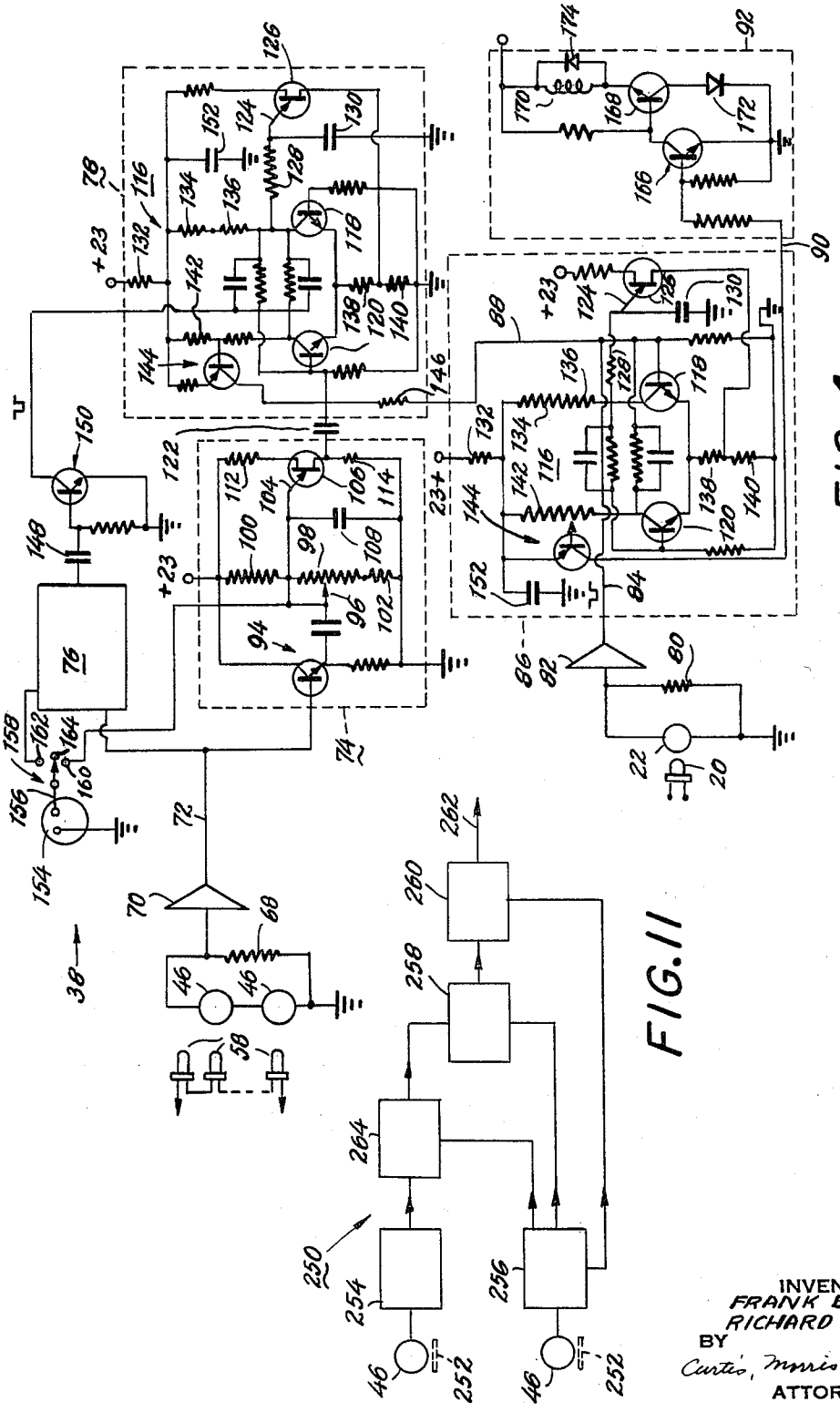

FIG. 4

FIG. 11

INVENTORS
FRANK E. JIRIK
RICHARD A. WOOD
BY
Curtis, Morris & Safford
ATTORNEYS

Nov. 8, 1966 F. E. JIRIK ET AL 3,283,896

SORTING APPARATUS

Filed Sept. 28, 1964 3 Sheets-Sheet 3

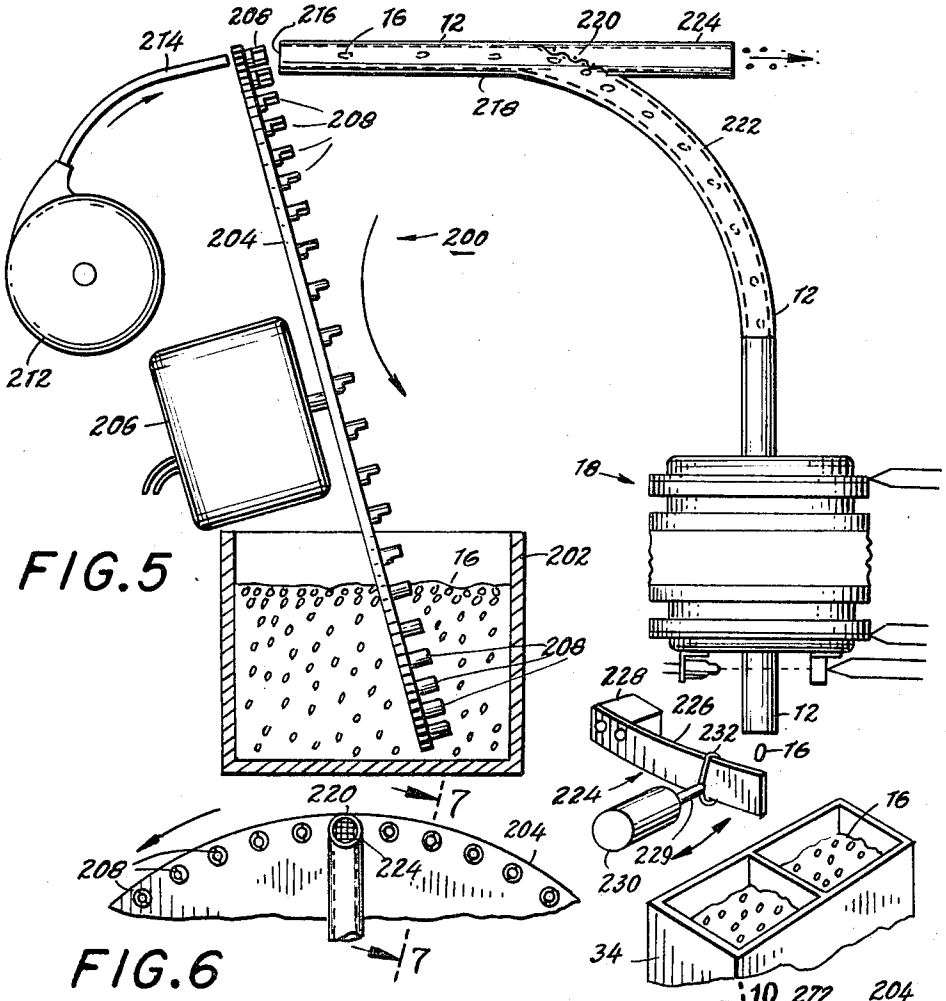

FIG. 5

FIG. 6

FIG. 7

FIG. 9

FIG. 10

FIG. 8

INVENTORS:
FRANK E. JIRIK
RICHARD A. WOOD
BY
Curtis, Morris & Safford
ATTORNEYS

United States Patent Office

3,283,896

Patented Nov. 8, 1966

3,283,896

SORTING APPARATUS

Frank E. Jirik, San Jose, and Richard A. Wood, Sunnyvale, Calif., assignors to Chemical Holding Company, Inc., a corporation of Panama

Filed Sept. 28, 1964, Ser. No. 399,531
27 Claims. (Cl. 209—111.6)

The present invention relates to apparatus for sorting objects from one another; more particularly, this invention relates to optical apparatus for sorting objects in accordance with the relative wave length and/or intensity of illumination reflected by such objects. In an illustrative embodiment, the invention is described hereinbelow as it is used in a device for sorting coffee beans.

In prior optical sorting equipment, and particularly in optical coffee bean sorting equipment, a particularly serious problem is that the equipment is quite complicated and expensive. As a result, this equipment has had only limited acceptance, and the prior coffee bean sorters have not been able to compete effectively with tedious hand-sorting of coffee beans.

Therefore, a major object of the present invention is to provide simple, reliable and inexpensive optical apparatus for sorting objects from one another.

A further object of the present invention is to provide such apparatus which is small in size and can be easily operated in remote agricultural regions.

Another object of the present invention is to provide such apparatus for sorting coffee beans with a high degree of accuracy and at a high rate of speed.

The drawings and descriptions that follow describe the invention and indicate some of the ways in which it can be used. In addition, some of the advantages provided by the invention will be pointed out.

In the drawings:

FIGURE 1 is a partially perspective, partially schematic, and partially cross-sectional view of a portion of the sorting apparatus of the present invention;

FIGURE 2 is a cross-sectional view taken along line 2—2 of FIGURE 1;

FIGURE 3 is a spectral response curve for a photoelectric cell used in the FIGURE 1 structure;

FIGURE 4 is a schematic diagram of an electrical control circuit for use with the structure shown in FIGURE 1;

FIGURE 5 is a partially cross-sectional and partially schematic elevation view of one embodiment of the present invention;

FIGURE 6 is a right-side elevation view of a portion of the apparatus of FIGURE 5;

FIGURE 7 is a perspective cross-sectional view taken along line 7—7 of FIGURE 6;

FIGURE 8 is a right-side elevation view of a portion of another embodiment of the invention;

FIGURE 9 is a view like that of FIGURE 6 showing a portion of another embodiment of the invention;

FIGURE 10 is a perspective cross-sectional view taken along line 10—10 of FIGURE 9; and

FIGURE 11 is a schematic diagram of a portion of another control circuit of the invention.

The sorting mechanism 10 shown in FIGURE 1 includes a vertically-mounted glass tube 12 into which objects 16 (in this case, coffee beans) are delivered to be sorted. The objects are delivered into tube 12 one-by-one by means of a feeder mechanism which will be described below.

The objects 16 fall downwardly through tube 12, through a photocell assembly 18, between a lamp 20 and an associated photocell 22, out of the exit opening of tube 12, and downwardly to a deflecting member 26. Deflecting member 26 normally is positioned vertically but is rotated to the position shown in FIGURE 1 by a rotary solenoid 28 which is actuated by a control circuit 38 shown in FIGURE 4 acting in conjunction with the photocell assembly 18. When an object is selected to be sorted out from the others, solenoid 28 rotates member 26 to the position shown so that the object hits member 26 and is deflected along line 24 into a compartment 32 of a bin 34. When the object is not selected to be sorted out, deflector member 26 is positioned vertically so that the object is allowed to fall straight downwardly along line 30 into another compartment 36 of bin 34.

Now considering the sorting mechanism 10 in greater detail, tube 12 may be made of transparent plastic or heat-resistant glass such as that sold under the trademark "Pyrex." Tube 12 is transparent except in the regions just above and below the photocell assembly 18; in those regions it is opaque to prevent ambient light from entering the photocell assembly.

Photocell assembly 18 includes a cylindrical metallic housing 42 having radial cooling fins 44. An annular photocell 46 is secured to each end of housing 42 between an annular fiber gasket 48 and an insulation strip 50, all of which are held onto housing 42 by means of screws 52 and brass electrostatic shield and light baffle 54.

As is shown in FIGURE 2, which is a cross-sectional view showing the innermost surface 56 of photocell 46, tube 12 fits tightly into the central aperture of annular photocell 46. Similarly, insulation sheet 50 and shield 54 fit closely around tube 12 to block the entry of ambient light. Gasket 48 has an inner diameter equal to that of housing 42.

Referring again to FIGURE 1, eight lamps 58 are mounted in horizontal holes in housing 42 located in a plane which is equidistant from both ends of the housing. The eight lamps 58 are small, elongated lamps of the type No. 1748 sold under the trademark "Tung Sol." Each of these lamps has a shoulder at its end where the electrical leads enter the lamp. The lamps are mounted in the holes with their shoulders abutting the housing and their forward ends projecting outwardly from the internal surface of the housing. The lamps are aimed at the longitudinal axis of tube 12.

Each lamp produces a narrow, intense focused white light beam so that the light produced by the lamps does not spread outwardly to the photocells 46. Each lamp has an extremely long life and should not require replacement during the ordinary life of the sorting mechanism 10. Thus, these lamps are connected in series to one another and are "potted" or encased with silastic material 60 or flexible epoxy resin to fully protect the lamps. The electrical power consumption and heating of each lamp is extremely low so that the heat dissipated by fins 44 is sufficient to prevent overheating. Thus, the sorter of the present invention requires no expensive blowers or other cooling means.

Referring now to FIGURE 2, each annular photocell 46 preferably is a selenium photovoltaic cell such as International Rectifier Corporation type PC103. Photocell 46 includes a metallic collector strip 62 attached to the photo-sensitive surface 56 of cell 46, with a collector lead 64 being attached to the strip 62. The other electrode 66 of the photocell is secured to the opposite surface of the cell.

Light striking surface 56 of a cell 46 will cause the cell to generate a small voltage signal between electrodes 64 and 66. Thus, when an object 16 reaches the position where lamps 58 shine upon it, the object reflects light in all directions. A large portion of this light strikes the surfaces 56 of photocells 46. Because of the symmetrical and closely-spaced location of lamps 58 com-

pletely around the tube 12, the surfaces of object 16 transverse to the axis of tube 12 are illuminated substantially uniformly. Because of the annular shape of photocells 46, reflected light is received from all surfaces around the circumference of the object. Thus, the particular orientation of the object when it is illuminated will have little or no effect on the manner in which reflected light is received by the photocells 48. This represents a substantial advantage over the previous arrangements in which an object often was selected or sorted out erroneously because it was improperly oriented in the selecting system.

As is well known, the output voltage of selenium photocell 46 is a function of the intensity of illumination received by the cell. Thus, the voltage from leads 66 and 64 of photocell 46 is dependent in part upon the intensity of the illumination reflected by object 16.

As is shown in FIGURE 3 the spectral response of selenium photocell 46 is substantially like that of the human eye. That is, the spectral response of the photocell extends over the entire visible range, has a peak near the peak response of the standard observer, and has a threshold in the infra-red region at 760 millimicrons, and in the ultraviolet region at approximately 300 millimicrons. Thus, the output voltage of each photocell 46 depends upon the wavelength as well as the intensity of the light reflected from object 16.

As a result of the foregoing, the sorting apparatus 10 shown in FIGURE 1 is quite versatile. It can select between objects reflecting light of different wavelengths but having the same intensity, including objects differing only in size, or it can select between objects reflecting light of the same wavelength with differing intensities. In addition, selection may be made between objects reflecting light having both different intensities and different wavelengths.

The sorting mechanism 10 operates quite effectively when it is used in sorting desirable coffee beans from undesirable coffee beans and debris. Decayed or other defective beans usually are black or are colored a dark hue. Similarly, other defective or undesired beans are yellow or white in color. Desirable coffee beans usually have a light green color. Debris of the same size as the coffee beans usually is light-colored. The apparatus 10 gives a low photocell output signal in response to a dark bean, a medium photocell signal within a desired range of voltage values for good green beans, and a high voltage signal for white beans or debris. These signals are utilized advantageously by the electrical control system 38 shown in FIGURE 4 to actuate deflector member 26 to deflect the black or "over dark" beans, the light beans and the debris while allowing the good green beans to fall into compartment 36 of bin 34.

Referring now to the control circuit 38 shown in FIGURE 4, selenium photocells 46 are connected together in series with a load resistor 68. The voltage signal developed across resistor 68 is amplified by a two-stage, high-gain, temperature-stabilized, low-drift D.C. differential amplifier 70. Amplifier 70 delivers an amplified photocell signal through output lead 72 to the input leads of two identical voltage level detector circuits 74 and 76. In a manner which will be described in greater detail hereinbelow, detector 74 produces an output switching pulse if and when the voltage signal delivered by output lead 72 reaches a first predetermined value, and detector circuit 76 produces an output pulse if and when that voltage reaches a second predetermined value greater than the first predetermined value. The output signals of detector circuit 74 and 76 are conducted to a disabling circuit 78 which normally does not produce a disabling signal, but which produces a disabling output signal when it receives a signal from detector 74 without a signal from detector 76. If output signals are supplied by both detector circuits 74 and 76, disabling circuit 78 again does not produce a disabling signal.

When the object 16 falling through tube 12 passes between lamp 20 and photocell 22, thus momentarily blocking the light beam from lamp 20, photocell 22, which is a standard silicon photocell, develops an output voltage pulse across a load resistor 80. This voltage pulse is amplified by a conventional multi-stage A.C. transistorized amplifier 82. The amplified output pulse developed by amplifier 82 is delivered through an output lead 84 to a gating circuit 86. Gating circuit 86 receives a disabling signal from disabling circuit 78 through output lead 88.

If no disabling signal is delivered over lead 88, gating circuit 86 delivers an output signal over lead 90 to a deflector energizing circuit 92. Deflector energizing circuit 92 includes the solenoid 28 which operates deflector member 26. Thus, the deflector signal delivered over lead 90 causes solenoid 28 to rotate deflecting member 26 to the position shown in FIGURE 1 so as to deflect the undesirable objects into compartment 32.

If a disabling signal is supplied over lead 88, gating circuit 86 does not supply a deflector signal. Thus, the solenoid 28 is not energized and the desirable objects 16 are allowed to fall downwardly past the deflector arm 26 into compartment 36.

The location of the components of the photocell assembly 18 with respect to lamp 20 and photocell 22 is such that the pulse delivered over output lead 84 to gating circuit 86 arrives after any output signals developed by detectors 74 and 76 and circuit 78 have been generated. Thus, the selection signals already will have been developed by the time an energizing signal is delivered over output lead 84.

When the sorting mechanism 10 is used to sort coffee beans, the voltage at which detector circuit 74 "fires" to produce an output signal is pre-set so that beans which are too dark will not produce a high enough photocell signal to fire circuit 74 and will be deflected by member 26. The firing voltage of detector circuit 76 similarly can be adjusted so that beans or other objects which are too light also are deflected. Thus, only good beans of an ideal color are passed by the sorting apparatus. The quality of the accepted beans is controllable by varying the difference between the firing voltages of detector circuits 74 and 76.

In considering detector circuits 74 and 76 in greater detail, since circuits 74 and 76 are identical, only circuit 74 will be described. In circuit 74, the input lead 72 is connected to an emitter-follower circuit 94 which is used for isolation and impedance-matching purposes. Emitter-follower circuit 94 is connected to the wiper arm 96 of a potentiometer 98 which is part of a voltage-divider network including series resistors 100 and 102.

The emitter electrode 104 of a unijunction transistor 106 is connected to wiper arm 96, and a relatively large capacitor 108 is connected between lead 104 and ground. A bias resistor 110 is connected between the "second base" electrode 112 of unijunction transistor 106 and a regulated 23-volt D.C. supply. This arrangement comprises a relaxation oscillator. When unijunction transistor 106 is not conducting, capacitor 108 is charged from the 23 volt source through the voltage divider network. When the sum of the bias voltage on emitter lead 104 and the input signal is sufficient to cause unijunction transistor 106 to conduct, stored energy is supplied from capacitor 108 through unijunction transistor 106 to develop an output signal across resistor 114. When capacitor 108 has discharged to a voltage which will no longer sustain conduction of tthe unijunction transistor, the transistor again becomes non-conducting and is prepared for the receipt of another input signal.

A bias adjustment meter 154 is provided to aid in adjustment of the bias voltages for unijunction transistors

106 in level detector circuits 74 and 76. Meter 154 is connected through a current-limiting resistor 156 to a 3-position switch 158. In order to adjust the bias level in detector 74, the switch contact arm is turned to contact 160 and potentiometer 96 in circuit 74 is adjusted until the desired bias is read on meter 154. The bias in circuit 76 is similarly adjusted by moving the contact arm of switch 158 to contact 162 and adjusting the potentiometer 96 of circuit 76 until the desired voltage is read on meter 154. When sorting coffee beans, the latter bias voltage will be lower than that for circuit 74. The contact arm is turned to contact 164 during operation of the circuit so that the meter is not connected to the circuit during its operation.

Disabling circuit 78 includes a time-delay monostable multivibrator indicated generally at 116. When circuit 116 is in its stable condition, transistor 118 conducts and transistor 120 is "turned off." The output pulse of detector circuit 74 is conducted through a coupling capacitor 122 to the base electrode of transistor 120. This causes multivibrator 116 to switch into its unstable condition in which transistor 120 conducts and transistor 118 is turned off.

The emitter lead 124 of a unijunction transistor 126 is connected through a resistor 128 to the collector electrode of transistor 118. A large capacitor 130 is connected between emitter lead 124 and ground. The total resistance of resistors 132, 134 and 136, which are connected between the 23-volt D.C. source and the collector electrode of transistor 118, is related to the total resistance of resistors 138 and 140, which are connected between the emitter of transistor 118 and ground, so that while transistor 118 is conducting, the voltage on the unijunction transistor emitter lead 124 is insufficient to cause the unijunction transistor to conduct. When, however, transistor 118 is turned off by a signal from detector 74, capacitor 130 starts building up charge from the 23-volt source through resistors 132, 134, 136, and relatively larger resistor 128. When, after a relatively long time delay, the voltage on emitter lead 124 reaches sufficient value, the unijunction transistor 126 will fire. The current flow through transistor 126 develops a voltage signal across resistor 140 which turns transistor 120 off and returns transistor 118 to its initial conducting state. Resistor 132 and capacitor 152 act as a decoupling network which prevents transients from switching transistor 126 on or off.

During the time that transistor 120 is conducting, a disabling signal is developed across a resistor 142 in series with transistor 120. This disabling signal is amplified by a transistor amplifier 144, and is supplied through a resistor 146 to output lead 88.

Thus, if the input signal provided by an object 16 falling through the sorting mechanism 10 is not sufficient to cause either of detectors 74 or 76 to develop an output signal, transistor 118 of disabling circuit 78 will remain conducting and no disabling signal will be supplied to gating circuit 86 over output lead 88. However, if the falling object develops a signal large enough to actuate detector circuit 74, disabling circuit 78 will develop a disabling signal of relatively long duration. If the signal also is of sufficient magnitude to actuate detector 76, that circuit will send an output signal through a coupling capacitor 148 and a transistor amplifier and inverter 150 to the base electrode of transistor 120. This signal will be developed a very short time after the signal from circuit 74 is developed so that it quickly returns multivibrator 116 to its stable condition. Thus, under such circumstances, the disabling signal produced on output lead 88 by disabling circuit 78 will be of very short duration. In fact, detector 76 produces its signal well before a signal is supplied to gating circuit 86 over line 84.

Gating circuit 86 is identical to disabling circuit 78. Therefore, corresponding reference numerals are used for corresponding components in circuits 86 and 78.

Both the signal from photocell 22 and the disabling signal are applied to the base electrode of transistor 118. The disabling signal is of a polarity opposite to that of the signal on line 84 and is of a magnitude sufficient to completely cancel the latter signal. Therefore, if a disabling signal appears on line 88, multivibrator 116 in gating circuit 86 remains in its stable condition and does not provide an actuating signal for energizing circuit 92. However, if no disabling signal is present when the signal is delivered over line 84, the latter signal turns off transistor 118 and causes transistor 120 to conduct, thus supplying an output signal through amplifier 144 and line 90. The duration of this output signal is sufficient to maintain the energization of solenoid 28 until after the object 16 has hit or passed deflector 26. The multivibrator 116 automatically returns to its stable condition after capacitor 130 has become sufficiently charged in the manner described above.

An output pulse on line 90 is conducted through a complementary symmetry circuit 166 which supplies a signal to the base electrode of a power transistor 168. Rotary solenoid coil 170 is connected between a regulated 22-volt D.C. power supply and the emitter of power transistor 168. A diode 172 is connected between the collector electrode of transistor 168 and ground to provide forward bias for transistor 168. Another diode 174 is connected in parallel with coil 170 to provide a short-circuit path for undesired transients. Thus, a signal supplied on line 90 energizes coil 170 and maintains its energization to hold deflecting member 26 in the position shown in FIGURE 1 until after the object 16 has struck it and been deflected.

The 22- and 23-volt D.C. sources used to provide the supply voltages for control circuit 38 and the sources for lamps 20 and 58 should be regulated to provide essentially constant output voltages. Preferably, solid state devices such as zener diodes should be used to provide the desired regulation. In addition, it is preferred that temperature compensation be provided in the 23-volt source and in the source for lamps 58. Also, it is preferred that all of these sources be adapted to operate from standard A.C. power lines. Power supplies having the above characteristics are well-known and readily available.

Control circuit 38 is especially advantageous for use in sorting objects a majority of which are of one type. For example, in sorting coffee beans, if the majority of the beans are good the solenoid 28 is energized only infrequently, thus preventing excessive wear and tear on the solenoid apparatus. However, if a majority of the beans are undesirable, the operation of the circuit easily can be changed so that the deflection mechanism is operated only to deflect the good beans.

It should also be recognized that the above-described sorting apparatus can be used to sort any of a wide variety of objects. For example, the apparatus can be used for sorting mustard seed, rice, nuts, and various granular materials.

An important advantage of the above sorting apparatus is that is does not require blowers for cooling. This is because the heat generated by the lamps is very low. This is in contrast to prior sorters which use photomultipliers which require high-intensity lamps. Those sorters require expensive blowers to keep the hot lamps from overheating the equipment.

The present sorting apparatus has a similar advantage over equipment in which an air jet is used to deflect the objects being sorted. Such an air jet requires a compressed air supply which makes the equipment more cumbersome and expensive; and especially so in remote regions of the world.

Its low cost, small size and reliability make the sorting apparatus of the present invention highly desirable for

use in remote agricultural areas where it would be expensive and inconvenient to provide compressed air supplies and the like. However, if a compressed air supply happens to be readily available, an air jet deflection system may be provided in place of the mechanical deflector **26**. In such a system, the control circuitry **38** would be used to control the provision of puffs of air to deflect selected ones of the objects being sorted.

Although the above-described sorting apparatus is compact, simple and inexpensive, it sorts objects rapidly. For example, it can sort coffee beans at the rate of 100 beans per second. Even faster sorting speeds are attainable. Each of the devices is so inexpensive that a number of them can be used simultaneously to provide a high-capacity sorting system.

The solid-state electrical circuit components can be mounted on printed circuit boards to provide easy interchangeability of components and easy maintenance. Maintenance requirements are minimized by the use of solid state components throughout the electrical circuit. Further, the low power requirements of the sorter permit the use of ordinary single-phase power lines sometimes needed in the past.

An alternative control circuit **250** is shown in FIGURE 11. This circuit is used to control a "color-ratio" arrangement of the sorting mechanism **10**. In such an arrangement a colored filter **252** (see FIGURE 1) is positioned over the photosensitive surface **56** of each photocell **46**. Each filter **252** blocks the passage through it of all light except that within a given narrow band of frequencies. The band of frequencies passed by each filter is different; for example, one passes green light and the other red.

Referring again the FIGURE 11, each photocell **46** is connected to one of a pair of D.C. amplifiers **254** and **256**. These amplifiers are connected to a ratio detector **258** which either adds or subtracts the signals it receives and produces an output signal proportional to either the sum or the difference of the two photocell signals. That output signal then is sent to a level detector **260** which produces a signal over output lead **262** only when the ratio signal from detector **258** falls within a given range. A time delay circuit **264** can be used as shown to compensate for any time differences existing between the signals from the two photocells **46**. The output signal supplied over lead **262** is conducted to a gating circuit like circuit **86** shown in FIGURE 4, and other circuitry like that shown in FIGURE 4 is used with lamp **20** and photocell **22** to operate the deflector solenoid **28** to deflect only those objects producing a color ratio signal within a given range. For example, the range could be set such that only good green coffee beans were deflected while beans either too light or too dark would pass straight downwardly into another bin.

Circuits suitable for use as elements **254**, **256**, **258**, **260** and **264** are well known and their details will not be described herein.

The objects **16** to be sorted should be fed into the sorting mechanism **10** one-by-one at spaced intervals. Such feeding can be performed by any of a number of commercially available devices such as the "Syntron" vibratory feeder. However, in accordance with the present invention, the feeding function preferably is performed by novel apparatus which is simpler and far less expensive than any equipment available commercially. This novel apparatus is shown in FIGURES 5 through 10.

The feeding mechanism **200** illustrated in FIGURES 5 through 7 includes a hopper **202** which contains a supply of objects **16** (such as coffee beans) to be sorted. A circular aluminum conveyor wheel **204** is rotated by a synchronous electric drive motor **206**. The wheel **204** is mounted at an angle slightly different from vertical, e.g. up to 25° from vertical. Conveyor wheel **204** has a plurality of conveyor scoops **208** spaced evenly all the way around its periphery.

As is shown most clearly in FIGURE 7, each scoop **208** is formed from a short length of tubing which is force-fitted into a hole in the wheel **204**. The portion of the tube extending outwardly from the wheel is split longitudinally in half so as to form a semi-cylindrical scoop portion **210**. Each scoop **208** is aligned in its hole so that the line along which the tube is longitudinally cut is aligned along a radius of the wheel **204**; that is, the open face of the scoop portion **210** faces towards the next scoop **208** on the wheel. A thin wire **211** is attached as shown in FIGURE 7 to prevent the object **16** from sticking in the tube.

The bottom portion of conveyor wheel **204** is positioned so as to dip down into the supply of objects **16** in hopper **202**. The wheel **204** is rotated at a moderately high speed, e.g. 100 revolutions per minute, and each scoop **208** catches one object **16** as it moves through the objects in the hopper **202**. Each object is carried upwardly to the top portion of the wheel where it is blown out of the scoop by an air jet which is directed into the rear opening of each scoop **208** as it comes adjacent to the top of the wheel. This air jet is supplied by a blower **212** through a tube **214**.

The inlet opening **216** of tube **12** is positioned directly opposite tube **214** so that it will catch the object **16** as it is blown out of scoop **208**. The object **16** then travels through a horizontal portion **218** of tube **12** under the force of the air jet and hits a screen **220** which deflects the object down into the curved portion **222** of tube **12** so that it then falls through the photocell assembly **18** and is sorted in the manner described above.

A horizontal exit tube **224** conducts dust or small objects or other undesired items which are small enough to pass through screen **220** into the atmosphere so that they do not pass through the photocell assembly **18**. Objects which are of a minimum desired size are deflected by the screen **220** and pass downwardly through portion **222** of tube **12** to be sorted.

The objects **16** emerging from photocell head **18** are deflected by a deflecting arrangement **224** which may be used instead of the deflecting arrangement illustrated in FIGURE 1. Deflecting mechanism **224** comprises a strip of spring steel **226** secured at one end to a solid mounting block **228**. The plunger **229** of a solenoid **230** is attached to the spring strip **226** by means of a wire loop **232** which provides a loose attachment of the plunger to the strip. The resiliency of strip **226** normally maintains it in a position away from the exit end of tube **12** so that it will not deflect objects emerging from that exit opening. Whenever the solenoid **230** is energized by the electrical control circuit **38** shown in FIGURE 4, plunger **229** moves outwardly quickly and hits the falling object **16**, thus deflecting it into a preselected compartment of bin **34**. The resiliency of spring strip **226** then returns it to its initial position after solenoid **224** is de-energized and has returned to its initial position.

The conveyor wheel **204** preferably is made of a light metal such as aluminum, and the scoops **208** preferably are made of steel for long wear. In a typical conveyor wheel designed for use in feeding coffee beans, the wheel **204** is a circular aluminum disk ¼ inch thick and 12 inches in diameter with scoops **208** located at one inch intervals around the periphery of the wheel. Scoops **208** are formed from 5/16 inch steel tubing. The wheel **204**, the drive motor **206**, the blower **212** and the remainder of the sorting apparatus including the tube **12**, photocell assembly **18** and the deflecting mechanism all may be mounted by means of brackets or other well-known structures. The speed of synchronous drive motor **206** may be reduced, if desired, through ordinary V-belts and pulleys or standard speed reducing units.

An alternative construction for conveyor wheel **204** is shown in FIGURE 8, which illustrates the lower portion of wheel **204**. The construction and operation of the FIGURE 8 embodiment is the same as that shown in

FIGURES 5, 6 and 7 except that the conveyor scoops **208** shown in those figures are replaced by curved blades **234** mounted behind and radially outwardly from the holes **236** into which the scoop tubing **208** otherwise would be fitted. Blades **234** scoop up the coffee beans or other objects **16** and the air jet blows through holes **236** to blow the objects into opening **216** of tube **12**. Curved blades **234** may be secured to wheel **204** by any suitable means, such as by welding or providing threaded stubs and making holes in wheel **204**.

In FIGURES 9 and 10 is shown a feeding arrangement **270** which is like the devices shown in FIGURES 5 through 8 except that the objects **16** leave the conveyor wheel **204** and are thrown into opening **216** of tube **12** by the action of centrifugal force rather than by an air jet. Also, the scoops **208** are replaced by scoops **271** formed by a pair of slotted posts **272** and **274** (see FIGURE 10) force-fitted into holes in wheel **204**, and a sheet metal member **276** fitted into the slots of the posts. The innermost post **274** is located along a radius spaced clockwise from the radius along which the outermost post **272** is located so that each scoop **271** holds the object until it reaches the proper release point.

An advantageous feature of the arrangement shown in FIGURES 9 and 10 is that a blower is not required. This reduces the feeder cost and power requirements. Surprisingly, when this sorter is used to sort coffee beans, both large and small beans follow almost the same trajectory and enter opening **215** with great accuracy.

The above-described feeding devices have any advantages over prior feeders, and especially over feeders of the vibratory type. First, and very importantly, the cost of the above-described feeders is low. In addition, the feeders are light weight, they use standard parts, and they provide an adjustable rate of feeding. Furthermore, they automatically separate out objects of very large size because the scoops can be made so that they will not pick up such large objects. What is more, none of these feeders has the undesirable vibration which accompanies the standard vibratory feeder, and it does not allow the objects to bunch up and pass through the sorting mechanism in groups as so often happens in vibratory feeders.

Together with the above-described feeder, the sorting apparatus **10** provides a relatively inexpensive device capable of sorting at a high rate of speed. Its simplicity insures that its maintenance cost will be low and insures that it can be operated by workers without special skills or training.

The above description of the invention is intended to be illustrative and not limiting. Various changes or modifications in the embodiments described may occur to those skilled in the art and these can be made without departing from the spirit or scope of the invention as set forth in the claims.

What is claimed is:

1. Apparatus for sorting objects from one another, said apparatus comprising, in combination, means for guiding said objects along a predetermined path, lamp means positioned near said path for illuminating each of said objects as it moves along said path, apertured photoelectric cell means substantially encircling said path for receiving illumination from said objects at a plurality of positions around said path, and means positioned adjacent said path for directing selected ones of said objects into another path in response to the illumination received by said photoelectric cell means from said object.

2. Apparatus as in claim **1** in which said photoelectric cell means is a photoelectric cell having an annular shape, and in which said cell is positioned with said path passing through the central opening of said cell.

3. Apparatus as in claim **2** in which said photoelectric cell is a selenium photovoltaic cell having a spectral response curve substantially like that of the human eye.

4. Apparatus as in claim **1** in which said directing means includes a solenoid and a spring blade which is selectively positionable by means of said solenoid to either block said path to deflect objects or allow objects to pass by undeflected.

5. Apparatus for feeding objects one-at-a-time into a sorting device, said apparatus comprising, in combination, means for receiving said objects, a movable support, a plurality of scoops on said support, means for moving said movable support so that said each of said scoops passes in sequence through a supply of said objects and picks up one object, and propelling means for developing a fluid jet and directing said jet against said object while in said scoop to propel said object from said scoop into said receiving means.

6. Apparatus as in claim **5** in which said propelling means is a blower which develops an air jet and directs said jet into said receiving means, in which said receiving means includes one passage aligned with said air jet and adapted to guide blown particles away from said sorting device, another passage branching off from said one passage and adapted to guide said objects into said sorting device, and screening means at the entrance to said one passage, said screening means being adapted to pass particles smaller than a predetermined minimum size through it and away from said sorting device and deflect all other objects into said other passage.

7. Apparatus as in claim **5** in which said movable support is a disk which has a plurality of peripherally-located spaced holes, in which each of said scoops has a curved scoop surface facing generally in the direction of rotation of said disk, with each of said scoops being positioned closely adjacent one of said holes, and in which said propelling means comprises a blower for developing an air jet flowing through each of said holes sequentially.

8. Apparatus as in claim **5** in which each of said scoops has dimensions such that it will pick up objects no larger than a predetermined maximum size, thus preventing the feeding of oversized objects to said sorting device.

9. An object feeder mechanism in combination with an object sorting device which sorts objects one-at-a-time, said feeder mechanism comprising, in combination, a rotatable member, a plurality of scoops located on said member radially outwardly from the center of rotation of said member, each of said scoops being shaped to catch and carry only one object from a supply of said objects, means positioned adjacent said rotatable member for catching objects thrown out of said scoops and guiding said objects into said object sorting device, and means for rotating said rotatable member and causing said objects to be thrown one-at-a-time out of said scoops and into said catching means by means of centrifugal force.

10. Apparatus as in claim **9** in which said rotatable member is a wheel and said scoops are located adjacent the periphery of said wheel at peripherally spaced intervals.

11. Apparatus as in claim **9** in which each of said scoops is adapted to lift and carry said one object vertically out of said supply prior to throwing said object into said catching means.

12. Apparatus for optically sorting objects one-at-a-time, said apparatus comprising, in combination, a rotatable conveyor member having a plurality of spaced scoop-shaped compartments each located radially outwardly from the center of rotation of said conveyor member for picking up and carrying objects from a supply of objects and throwing said objects to a receiving point, receiving and guiding means for receiving thrown objects at said receiving point and guiding said objects along a predetermined path, lamp means positioned near said path for illuminating each of said objects as it moves along said path, apertured photoelectric cell means substantially encircling said path for receiving illumination from said object at a plurality of positions around

said path, and means positioned adjacent said path for directing selected ones of said objects into another path in response to the illumination received by said photoelectric cell means from said objects.

13. Apparatus for sorting objects from one another, said apparatus comprising, in combination, means for guiding said objects along a predetermined path, lamp means positioned near said path for illuminating each of said objects as it moves along said path, apertured photoelectric cell means substantially encircling said path for receiving illumination from said object at a plurality of positions around said path, and means positioned adjacent said path for directing selected ones of said objects into another path in response to the illumination received by said photoelectric cell means from said object, said lamp means comprising a plurality of self-focusing lamps, the light beam of each lamp being directed toward said path without directly illuminating said cell means.

14. Apparatus as in claim 13 in which said lamps are located in an array substantially encircling said path.

15. Apparatus as in claim 14 in which said cell means comprises a pair of photocells, each encircling said path with said lamps located between said photocells, each photocell having a substantially flat photosensitive surface aligned generally perpendicularly to said path, and with each light beam from said lamps being directed towards said path in a direction generally perpendicular to said path.

16. Apparatus for sorting objects from one another, said apparatus comprising, in combination, means for guiding said objects along a predetermined path, lamp means positioned near said path for illuminating each of said objects on more than one side as it moves along said path, a photocell positioned near said path for receiving illumination from positions on the surface of said object extending a major portion of the distance around said object at a plurality of spaced apart positions adjacent said path and summing the illumination received from various sides of said object, and means positioned adjacent said path for directing selected ones of said objects into another path in response to the illumination received by said photoelectric cell means from said object.

17. Apparatus for sorting objects from one another, said apparatus comprising, in combination, a tube made of transparent material, said tube being inclined with respect to horizontal, a housing surrounding a portion of said tube, a plurality of lamps mounted in said housing, each of said lamps being positioned so as to direct its light towards the longitudinal axis of said tube in a plane which is transverse to said axis, and an annular photoelectric cell positioned adjacent to said plane with said tube passing through the central aperture of said cell, and with the photo-sensitive surface of said cell facing towards said lamps, means positioned adjacent said path for directing selected ones of said objects into another path, and electrical means for selectively actuating said directing means in response to the reflected illumination received by said photoelectric cell means from said object.

18. Apparatus as in claim 17 including two of said annularly-shaped photoelectric cells, one being positioned above said lamps and the other below said lamps, said cells being located symmetrically with respect to said lamps and said longitudinal axis of said tube.

19. Apparatus for sorting undesirable coffee beans and debris from desirable coffee beans, said apparatus comprising, in combination, a vertical tube with transparent walls, a photocell assembly head comprising a cylindrical housing, a pair of annular selenium photovoltaic cells mounted in said housing, each of said cells having a spectral response substantially like that of the human eye, said photocell assembly head being mounted so as to surround said tube with said tube passing through the central apertures of said cells, a circular array of lamps, each of said lamps being located equidistant from each of said cells and symmetrically with respect to the others of said lamps, and the light beam of each lamp being aimed at the longitudinal axis of each said tube, another photocell positioned below the lowermost of said annular photocells, another lamp positioned opposite said other photocell so as to direct its light through said tube and into said other photocell, a solenoid-operated deflecting mechanism positioned below the outlet opening of said tube, said mechanism being operable to deflect said debris and said undesirable coffee beans away from the direction of said longitudinal axis of said tube, and to allow said desirable beans to continue in said direction, and separate containers for catching the deflected objects and those falling in said direction.

20. In apparatus for sorting objects from one another, said apparatus including photoelectric means for detecting the relative reflection of light by said objects, and electrically-operated diverting means for changing the direction of movement of selected ones of said objects, electrical circuit means for controlling the operation of said diverting means, said circuit means comprising, in combination, means for developing an energizing signal for said diverting means in response to the passage of an object through said apparatus, first disabling means for developing a signal for disabling said energizing signal means if and when the photoelectric signal developed by said object reaches a first predetermined value, and second disabling means for developing a signal for disabling said first disabling means if and when the photoelectric signal developed by said object reaches a second predetermined value which is greater than said first predetermined value by a pre-set amount, said energizing signal means being adapted to develop its energizing signal after the development of said first and second disabling signals.

21. Apparatus as in claim 20 in which each of said disabling means includes a unijunction transistor relaxation oscillator circuit for developing said disabling signal.

22. Apparatus as in claim 21 including adjustable means for biasing each of said unijunction transistors to pre-set said first and second predetermined values, said adjustable means including two potentiometers for separately adjusting the bias on each of said unijunction transistors, meter means, and switch means for alternatively connecting said meter to the wiper of either of said potentiometers to aid in pre-setting said predetermined voltage values.

23. Apparatus as in claim 20 including a time-delay monostable multivibrator adapted to be switched into its unstable condition by said first disabling signal to deliver a corresponding disabling signal to said energizing signal means, said multivibrator also being adapted to be returned to its stable condition by said second disabling signal.

24. Apparatus as in claim 20 in which said energizing signal means includes photocell means for detecting the passage of said object through said apparatus, said photocell means being positioned to detect said object after it has passed said photoelectric means, and a monostable time-delay multivibrator adapted to produce an energizing signal upon being switched into its unstable condition, said multivibrator being adapted to receive a disabling signal and to be switched by the receipt of a signal from said photocell means when no disabling signal is received.

25. In photoelectric sorting apparatus, a device for developing electrical signals whose intensities depend upon the light reflected from objects moved through said device along a predetermined path, said device comprising, in combination, a housing, a plurality of self-focusing lamps which produce a narrowly confined beam of very intense light mounted in said housing, at least one photoelectric cell mounted in said housing, said light being directed towards said path so as to illuminate objects traveling along said path but without directly illuminating said photoelectric cell, said photoelectric cell having its light-sensitive surface facing said objects while they are illuminated.

26. Apparatus as in claim 25 including a pair of photoelectric cells mounted parallel to one another at opposite ends of said housing with their photosensitive surfaces facing one another, each cell having a central hole providing an opening for said objects to pass through said housing, said lamps being arrayed symmetrically about the axis of said holes and being directed to shine in a plane substantially parallel to said cells.

27. Apparatus as in claim 26 including first and second light filters each covering the light-sensitive surface of one of said cells, the light passed by one of said filters having a frequency range substantially different from the range of frequencies passed by the other of said filters, electrical circuit means for developing an electrical ratio signal which is a function of the relative intensity of the signals produced by said cells, and a level detection circuit connected to said ratio circuit means for producing an output signal in response to its receipt of a ratio signal having a magnitude within a predetermined range.

References Cited by the Examiner

UNITED STATES PATENTS

1,701,765	2/1929	Thompson	198—211
2,054,319	9/1936	Hanson	209—73 X
2,131,096	9/1938	Cox	209—111.6
2,726,762	12/1955	Aubrey	209—111.6
2,776,747	1/1957	Douwe	209—111.6
2,785,610	3/1957	Meyer-Jagenberg.	
3,008,722	11/1961	Coffin.	
3,096,443	7/1963	Laycak.	
3,173,107	3/1965	Scharf	307—88.5 X
3,179,247	4/1965	Hutter	209—74
3,220,549	11/1965	Wong	209—111.6

M. HENSON WOOD, JR., *Primary Examiner.*

J. N. ERLICH, *Assistant Examiner.*

UNITED STATES PATENT OFFICE

CERTIFICATE OF CORRECTION

Patent No. 3,283,896 November 8, 1966

Frank E. Jirik et al.

It is hereby certified that error appears in the above numbered patent requiring correction and that the said Letters Patent should read as corrected below.

In the heading to the printed specification, lines 3 to 5, for "Frank E. Jirik, San Jose, and Richard A. Wood, Sunnyvale, Calif., assignors to Chemical Holding Company, Inc., a corporation of Panama" read -- Frank E. Jirik, San Jose, Costa Rica, and Richard A. Wood, Sunnyvale, Calif., assignors, by mesne assignments, to Elcemco, Inc., a corporation of Panama --.

Signed and sealed this 11th day of February 1969.

(SEAL)

Attest:

Edward M. Fletcher, Jr.

Attesting Officer

EDWARD J. BRENNER

Commissioner of Patents