United States Patent [19]

Andersen

[11] **3,871,315**

[45] **Mar. 18, 1975**

[54] **DEVICE FOR SALVAGING METAL OBJECTS AND SALVAGING METHOD**

[76] Inventor: **Leonard Morgansen Andersen,** 46 Alexander Ave., Yonkers, N.Y. 10704

[22] Filed: **June 20, 1973**

[21] Appl. No.: **371,875**

[52] **U.S. Cl.** **114/51**

[51] **Int. Cl.** **B63c 7/04**

[58] **Field of Search** .. 114/51, 206 A; 75/27, 44 SC, 75/63, 65; 104/15; 294/86.1; 228/56

[56] **References Cited**

UNITED STATES PATENTS

1,168,061	1/1916	Deppeler	104/15
2,154,654	4/1939	Armentrout et al.	294/86.1
2,253,364	8/1941	Cohen	75/27
2,374,134	4/1945	Richard	114/51
2,717,204	9/1955	Noddin et al.	75/27
2,789,004	4/1957	Foster	294/86.1
3,243,218	3/1966	Jennings	294/86.1 X
3,421,570	1/1969	Guntermann	75/27
3,711,019	1/1973	Rulo	228/56

Primary Examiner—George E. A. Halvosa
Assistant Examiner—Gregory W. O'Connor

[57] **ABSTRACT**

A submersible device for use in salvaging metal objects comprises a magnetized metallic housing containing compressed thermit suitably sealed from the water. The housing in lowered on cables until its magnetic field causes contact with the object to be salvaged. The thermit may be ignited by a voltage applied to a wire which is returned to the vessel from which the housing is deployed. When the thermit ignites, it produces a molten metal which burns through the bottom of the housing and forms a weld between the housing wall and the surface of the metal object to be salvaged. The object may then be raised by pulling on the cables supporting the housing.

6 Claims, 7 Drawing Figures

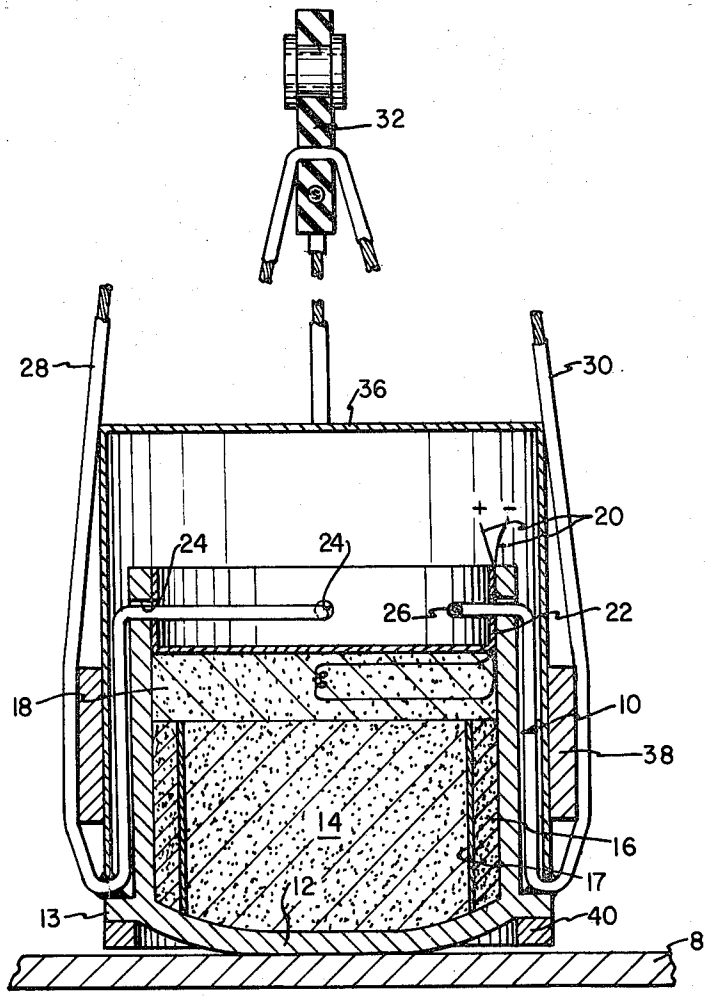

FIG. 1

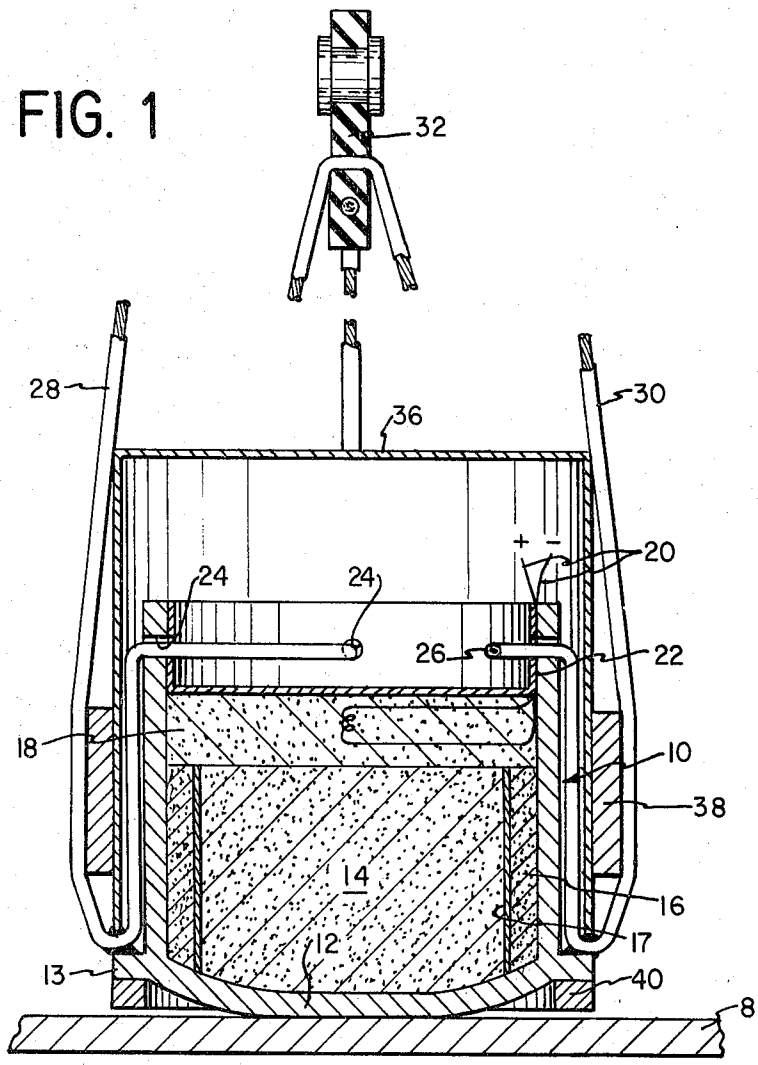

FIG. 2A

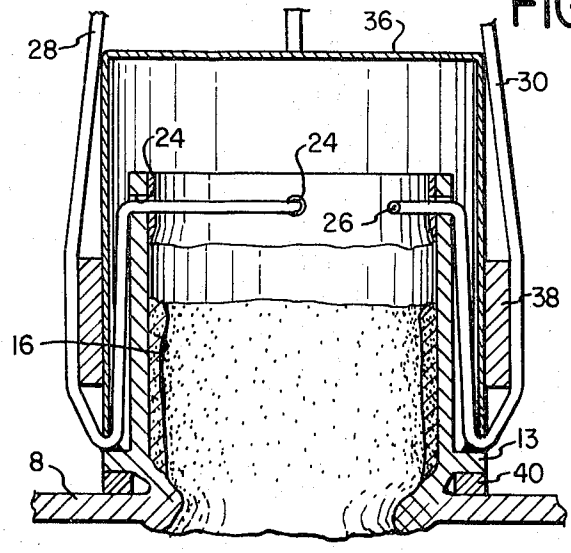

FIG. 2B

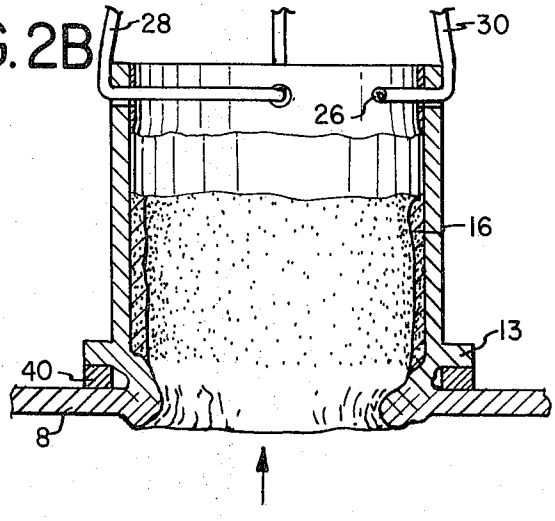

FIG. 3

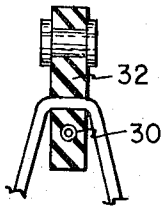

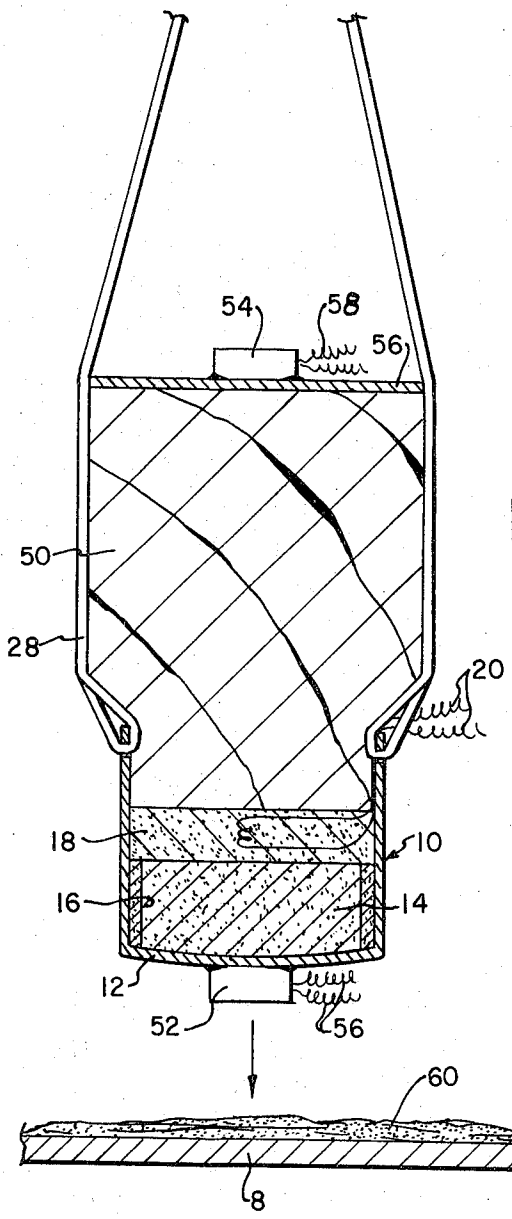

FIG. 4A

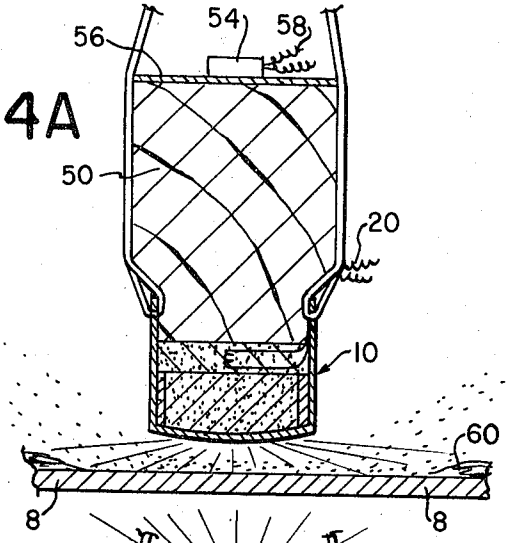

FIG. 4B

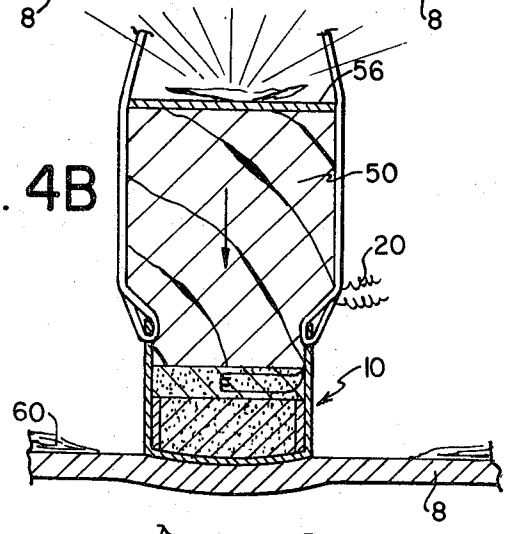

FIG. 4C

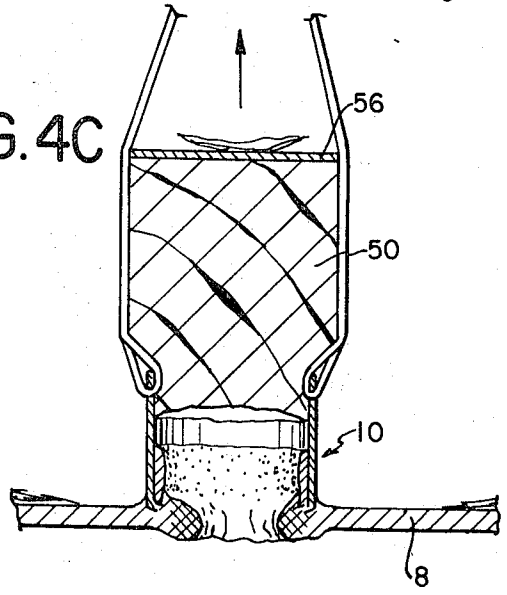

DEVICE FOR SALVAGING METAL OBJECTS AND SALVAGING METHOD

This invention relates to a device for use in salvaging metal objects and to a method of salvaging such objects.

The salvaging of underwater objects is an expensive and complex undertaking. With most known techniques, a diver must secure grappling means to the object to be salvaged so that it can be raised to the surface. In the case of large boats, this is frequently impractical and various other techniques have been devised for their recovery. For example, certain plastic materials may be pumped into the hull of a boat and activated to provide a cellular mass which will tend to raise the object to the surface of the water because of the foam's displacement of water. However, this is an expensive process which also requires the services of divers and in many cases such processes are not economically feasible.

U.S. Pat. No. 3,385,250 of Raule discloses a submersible salvaging device which is magnetically attracted to a ferrous object and, thereafter, capable of securing itself to the object by drilling and tapping a hole. However, this device also is relatively expensive and, therefore, commercially impractical in situations where a large number of such devices must be used because of the bulk of the object to be salvaged.

The present invention provides a relatively inexpensive device for use in salvaging submerged metallic objects. It is a highly portable device which, in most cases, may be secured to the surface of the object to be salvaged without diver assistance in a way which is completely different from known devices of this type. Furthermore, the device may be quickly and easily deployed and secured, and requires very little on board support equipment for its use. The invention is not only commercially practicable, it is of particular advantage where time is important.

In accordance with the invention, a compressed ignitable powder, such as thermit, is contained in a housing which may be magnetized and lowered into the water by means of cables. In the case of an object made of a ferrous or other magnetic material, the housing will be attracted to the object and when contact is made, the thermit is ignited by means of a voltage applied to suitable electric leads which extend through the housing into the thermit. Ignition of the thermit produces a molten metal having a temperature close to 2388°C which burns through the bottom of the housing and the surface of the metal object to fuse the remaining portion of the housing to the metal object. After the required number of devices have been deployed and activated (depending on the size of the object) the object may be raised to the surface by pulling on the cables or by other lifting means which can be secured to the housing.

The invention is described in further detail below with reference to the attached drawings wherein:

FIG. **1** is a side sectional view of a preferred embodiment of the invention;

FIGS. **2A** and **2B** are side sectional views similar to FIG. **1** diagrammatically illustrating the weld formed between the housing and surface of the metallic object to be salvaged;

FIG. **3** is a side sectional view of a second embodiment of the invention; and

FIGS. **4A**, **4B** and **4C** diagrammatically illustrate the method of using the device illustrated in FIG. **3.**

FIG. **1** shows a surface of the object to be salvaged at **8.** The device, according to the invention, includes a cylindrical housing **10** made of steel and open on the top. Housing **10** includes a curved rounded bottom surface **12** extending into a flange **13.** The housing contains a thermit material **14** which has been compressed to about 8000 psi and a layer of similarly compressed flux material **16** enveloping the thermit **14.** When compressed to this extent, the thermit and flux materials become solid, brick-like masses. A thin steel cylinder **17** separates the thermit **14** and flux **16,** and helps to disperse the heat of reaction to reduce hot spots. An igniting powder **18** is placed above the thermit **14.**

The thermit mixture **14** is a mixture of iron oxide and aluminum particles (commercially available as plain thermit) and has known uses in welding processes. If an oxidation reaction is started (referred to as "igniting"), the aluminum, which is a strong reducing agent, combines with the oxygen from the iron oxide and reduces the iron oxide to iron. The intense heat that results, because of the chemical action, not only melts the iron but raises it to a temperature of 2388°C. Consequently, the material may be used to fuse with other metal surfaces to form a strong weld.

The igniting powder **18** may consist of a lightly compressed mixture of fine particle aluminum powder and fine particle iron oxide (Fe_3O_4) in proportion by weight of 3 to 7. The particle size will depend on the available current. For example, with only a twelve volt battery, the finest commercially available particle size would be used. Light compression (less than 25 psi) is necessary to prevent gapping through the mixture and to facilitate reaction. This preferred igniting powder is also a thermit mixture and is preferred to other igniting powders because it does not emit gases. The flux **16** which surrounds the thermit mixture **14,** may comprise known materials such as, for example, high cellulose welding rod coating or H-700 submerged arc welding flux sold by Hobart Brothers Company of Troy, Ohio. This flux material aids in controlling the flow of the molten iron, insulates the molten iron from the water, and further anneals the weld between the housing and surface **8.**

A pair of ignition wires **20** (shown diagrammatically in FIG. **1**) extend into the igniting powder **18.** The ignition wire is standard and may include a bare nickel-chromium wire (not specifically illustrated) which, when a voltage is applied to the wires **20,** will be heated to a temperature sufficient to ignite the igniting powder **18** and, consequently, the thermit mixture **14.** A watertight seal is formed by a cap **22** which may be made of thin steel and is press-fit onto the open end of housing **10** with the insulated ignition wires **20** pressed between the cap **22** and the interior surface of housing **10.**

The upper portion of the housing **10** and the seal **22** may include two pairs of openings **24** and **26** (only one opening **26** being illustrated) through which pairs of cables **28** and **30** pass. These cables **28** and **30** are used to raise and lower the device and may be any suitable cable depending upon the application. The cables are secured at a coupling joint **32** which may be grasped by a suitable device on the vessel from which the devices are to be deployed.

The particular arrangement for lowering and raising the device is not a part of this invention, the cable arrangement in FIG. **1** being selected principally for pur-

poses of economy. Since the device frequently will not be welded to a submerged object with its longitudinal axis vertical, the cables **28** and **30** should be capable of sliding within the coupling joint **32** so that equal forces will be applied to the four attachment points on the housing (openings **24** and **26**) regardless of the angle of the device after welding.

The entire device as so far described is enclosed within a metal cover **36,** the bottom of which rests on flange **13.** Again, for purposes of economy, the cables **28** and **30** may be brought from openings **24** and **26** down to the bottom of the cover **36.** The bottom of the cover **36** may be adhesively secured to flange **13** to form a watertight seal between the cover and flange and creating an air space enveloping the housing **10.** An annular counterweight **38** may be secured to cover **36** to help maintain the seal between cover **36** and flange **13** as the device is deployed into the water, and to hold the cover down during welding when the adhesive seal will burn off.

A copper ring **40** may be secured (e.g. by an epoxy adhesive) to the bottom of flange **13.** Ring **40** retains the molten metal because of its excellent heat conductive properties so as to prevent the liquid iron from running off surface **8.**

After the weld has been formed (as described below) and the cables **28** and **30** are pulled, the cover **36** will be dislodged but this is of no particular consequence. By running the cables **28** and **30** beneath the cover **36,** it is not necessary to provide additional watertight openings in the cover.

The device also includes an annular ring **40** which may be made of copper and is secured to the undersurface of flange **14** for the purpose of directing the molten metal against the surface of the metal object to be salvaged.

The manner in which the embodiment of FIG. **1** is used should be apparent from the foregoing description. Preferably, the device is magnetized by subjecting its ferrous components to a strong magnetic field so that it may be deployed into the water by means of cables **28** and **30** and allowed to attach itself magnetically to the ferrous surface of the object **8.** After the housing is in position, a voltage is applied to the ignition wires **20** and the powder **18** is ignited by the heat created by the nickel chromium wire within the powder. Ignition of powder **18** ignites the thermit mixture **14** creating, as described above, a molten bath of iron at a temperature of 2388°C. This molten material melts the bottom surface **12** of the housing **10** and also burns through the contiguous surface of object **8.** The extreme temperatures fuse the housing **10** to the surface **8** to form an extremely strong junction as shown in FIG. **2A.** For example, it is estimated that in the case of a housing of about 6 inches in outer diameter, the weld formed would be capable of lifting a total weight of about 5 tons. The entire welding process requires only about 30 seconds.

In virtually all cases, a number of devices will have to be secured to the object to be salvaged. After all of the required devices have been welded in place, the cables **28** and **30** of the device are pulled to raise the object to the surface as diagrammatically shown in FIG. **2B.**

FIG. **3** illustrates a second embodiment of the invention. In this embodiment, the arrangement of the housing **10,** thermit **14,** flux **16,** igniting powder **18** and seal **22** is essentially the same as that of the embodiment illustrated in FIG. **1.** The cables **28** and **30** are arranged slightly differently, as shown, but this is not material.

In accordance with this embodiment of the invention, a large block **50** of non-metallic material such as plastic or wood is press-fit into the covering seal **22.** A first explosive device **52** is suitably secured to the bottom of housing surface **12** and a second explosive device **54** is suitably secured to a plate **56** attached to the top of block **50.** If desired to provide an insulating air space, the entire device may be enclosed within a cover such as the cover **36** illustrated in FIG. **1.**

The purpose of the explosive device **52** is to clean the surface to be welded where, because of an extended period of submersion or other causes, the metal object does not include a surface to which a satisfactory weld can be formed. The purpose of the explosive device **54** is to drive the housing surface **12** into the metal surface of the object to be salvaged to create a slight indentation which will tend to retain the molten metal from the thermit mixture. The explosive charges **52** and **54** may include ignition wires **56** and **58** which extend to the vessel from which the device is deployed along with the wires **20** for the igniting powder **18.** In this way, the explosive charges **52** and **54** can be activated from the deploying vessel although the invention contemplates any type of control for these devices.

FIGS. **4A, 4B** and **4C** show the manner in which the embodiment of FIG. **3** is used to form a tight weld to a metal surface **8** containing barnacles or some other material **60** which would normally interfere with the weld. Thus, in FIG. **4A,** when the device makes contact with the material **60,** the explosive charge **52** will clean a small area allowing the housing surface **12** to contact the metal surface **8.** When the device is returned to surface **8,** the explosive charge **54** drives the entire device against the metal surface **8** with sufficient force to make a slight indentation. Thereafter, the thermit mixture **14** is ignited as described above, the housing **10** fused to surface **8,** and the device hauled to the surface of the water by means of the cables **28** and **30.**

In the embodiment of FIG. **3,** the non-metal block **50** absorbs the shock of the explosive device **54** and also tends to maintain the device in a vertical position. Of course, if necessary, the device may be suitably weighted to counteract the buoyancy of block **50.**

If the device is used to salvage vessels containing fluids and, particularly, oil, there is a possibility that after the weld is formed the oil will leak from the vessel through the housing which may no longer be fluid-tight after the thermit mixture **14** has been ignited. Hence, in such a situation, the entire device may be covered with an inverted can having a urethane foam seal and a magnet for securing the can to the tanker's surface. In the event of leakage, the oil will be confined to the space within the inverted can.

The specific construction of the embodiments illustrated have been selected with a view toward economy since the devices are expendable. Accordingly, numerous structural changes may be made. Instead of lowering the device by means of cables **28** and **30** which are used to haul the submerged object to the surface, the housing may contain some type of attachment means to which a heavy hauling line can be coupled after the weld is formed. Special attachment lugs or ears may be formed on housing **10,** but the illustrated construction has proved workable and is presently preferred for purposes of economy. Selection of materials (including the

thermit) and the size of the device itself will depend on the applications involved. Typically, housing **10** may have an outer diameter of 6 inches and be filled with about 20 pounds of thermit **14.** Approximately three to four pounds of flux **16** are used forming a cylindrical layer about one-fourth – three-eighths inches thick. About 5 pounds of the thermit igniting powder **18** may be used. The thickness of the housing walls is about three-eighths inches. With respect to the embodiment of FIGS. **3** and **4,** explosive charge **52** may comprise a No. 6 electrical cap with instant detonation and two grams PETN explosive (from DuPont). Charge **54** may comprise a No. 6 electrical cap with **25** ms delay detonation and four grams PETN.

What is claimed is:

1. A submersible device for use in salvaging metal objects from a body of water, comprising

a housing having an opening at one end;

a compressed thermit mixture within said housing, said thermit mixture being enveloped by a flux material;

a metal container enveloping said housing to form an insulating air space between the interior surface of said container and said housing, with means forming a watertight seal between said container and said housing;

an igniting powder above the thermit mixture within said housing, said igniting powder being of the type which does not emit gases upon ignition;

means for igniting said igniting powder;

means for sealing the open end of said housing;

means enveloping the closed end of said housing for directing the flow of molten metal after said thermit mixture has been ignited toward a confined area of an object to be salvaged; and

lifting means connected to said housing for enabling said housing to be pulled toward the surface of the water after it has been welded to a metal object by ignition of said thermit.

2. A submersible device according to claim **1,** wherein said thermit mixture is compressed to the form of a solid brick-like mass.

3. A submersible device according to claim **2,** wherein said thermit mixture and said flux material are compressed to about 8000 psi.

4. A submersible device according to claim **2,** wherein said igniting power is a second thermit mixture of finer particle size and under less compression than said first named thermit mixture, and wherein said igniting means comprises an ignition wire within said second thermit mixture.

5. A submersible device according to claim **4,** wherein the closed end of said housing is rounded and wherein said means enveloping the closed end of said housing comprises an annular metallic ring.

6. A submersible device according to claim **1,** wherein said housing is magnetized.

* * * * *