T. POWELL.

BURGLAR-ALARMS.

No. 194,173. Patented Aug. 14, 1877.

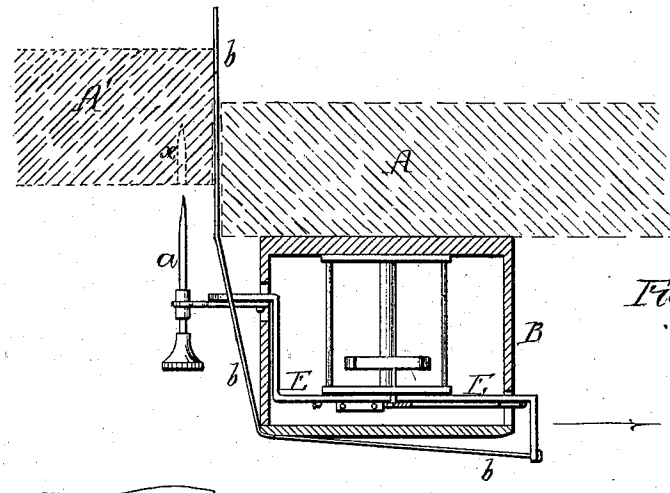

Fig. 1.

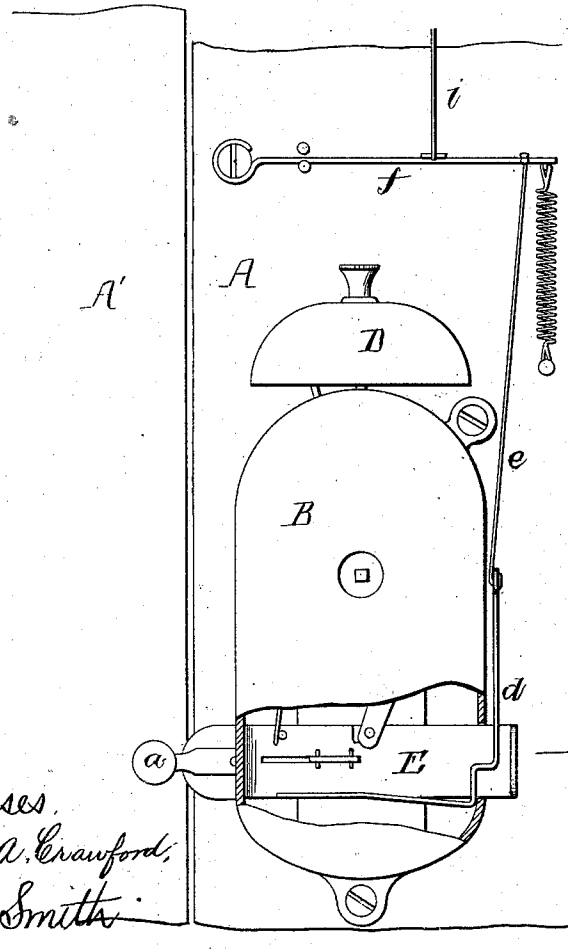

Fig. 2.

Witnesses.
Harry A. Crawford.
Harry Smith.

Inventor
Thomas Powell
by his Attorneys
Cowan and Son

N. PETERS, PHOTO-LITHOGRAPHER, WASHINGTON, D. C.

UNITED STATES PATENT OFFICE.

THOMAS POWELL, OF PHILADELPHIA, PENNSYLVANIA.

IMPROVEMENT IN BURGLAR-ALARMS.

Specification forming part of Letters Patent No. **194,173**, dated August 14, 1877; application filed July 16, 1877.

To all whom it may concern:

Be it known that I, THOMAS POWELL, of Philadelphia, Pennsylvania, have invented a new and useful Improvement in Burglar-Alarms, of which the following is a specification:

My invention relates to certain improvements in the burglar-alarm for which Letters Patent No. 163,524 were granted to me on the 18th day of May, A. D. 1875, the objects of my improvements being to simplify the catch, to provide for setting the instrument from the outside as well as from the inside of the door, and to adapt it for being operated by the opening of any one of a number of doors or windows in a room or building. These objects I attain in the following manner, reference being had to the accompanying drawing, in which—

Figure 1 is a sectional plan view of my improved burglar-alarm; and Fig. 2, a front view of the same, partly in section.

A represents a portion of a door, and A′ part of the door-frame, a casing, B, containing clock-work mechanism, and carrying a gong, D, similar to that described in the aforesaid patent, being secured to the inside of the door, adjacent to the front edge of the same.

E is a slide, which governs the operation of the clock-work mechanism and the sounding of the gong through the medium of a system of arms or levers, fully described in the aforesaid patent. Thus, when the slide is in the position shown in Figs. 1 and 2, the clock-work will be prevented from operating and sounding the gong; but if the slide is permitted to move in the direction of the arrow, the clock-work will be released and the gong sounded.

In the patented device the slide E carried at its outer end a hinged catch, which engaged with a pin driven into the frame of the door; but in order to obviate the necessity of driving this pin, as well as to make the instrument self-contained, I provide the outer end of the slide with a pin, *a*, having a pointed end, which, when the door is closed, enters the wood-work of the door-frame, and serves to hold the slide in the extended position to which it had been adjusted.

In order to prevent the bending or breaking of the slide, which might occur if the pin was rigid and met with undue resistance, or did not penetrate the wood to an extent equal to the movement of the slide toward the same, said pin is permitted to move to and fro in the outer end of the slide, so as to yield upon undue pressure being exerted upon the same.

The device shown in the patented burglar-alarm above referred to could only be set from the interior of the room in which it was situated, and was objectionable on that account.

In order to overcome this objection I attach to the rear end of the slide, or to some other convenient point on the same, one end of a cord, *b*, the opposite end of which, after passing round the front edge of the door, extends some distance from the outside of the same.

Before closing the door the person leaving the room moves the slide E to the position shown, and draws tightly upon the outer end of the cord *b*, the tension upon which serves to keep the slide in its proper extended position. As the door is closed the end of the pin *a* enters the opening *x* in the door-frame, and the cord *b* can then be released. I prefer to make the cord elastic, so that as soon as its end is released it springs back into the room, and is inaccessible from the outside of the same.

It will be evident that this cord *b* can be used in connection with the catch shown in the patented burglar-alarm, as well as with the improved catch shown in the drawing.

In order that the operation of the device may be effected by the opening of any of the doors or windows of a room or building, I provide the slide E with a bent spring-arm, *d*, which is connected, by means of a cord or wire, *e*, to a spring-lever, *f*, the latter being connected to a cord or wire, *i*, having suitable branches leading to the different windows or doors.

When all the doors and windows are closed the parts are in the position shown in Fig. 2, the bent portion of the spring-arm *d* engaging with the edge of the slot in the case A, through which the slide E passes, and thus preventing any movement of slide in the direction of the arrow. The opening of any of the doors or windows, however, will exert a sufficient tension upon the cord *i* to cause the operation of

the spring-lever *f*, the lifting of the spring-arm *d*, and the release of the slide E, and consequent operation of the clock-work mechanism and the sounding of an alarm.

When the above-described retaining arrangement is employed, the use of the pin *a* may be dispensed with.

I claim as my invention—

1. The combination of the alarm mechanism, the governing-slide E, and the pin *a*, carried by and capable of moving in the outer end of said slide, as specified.

2. The combination of the alarm mechanism, the governing-slide E, and its retainer, with the cord *b*, as specified.

3. The combination of the alarm mechanism, the governing-slide E, and its spring-retaining arm *d*, as specified.

In testimony whereof I have signed my name to this specification in the presence of two subscribing witnesses.

THOMAS POWELL.

Witnesses:

HERMANN MOESSNER,

HARRY SMITH.