Jan. 20, 1959 H. L. BASS 2,869,770

LUNCHBOX CONSTRUCTION

Filed June 8, 1956 2 Sheets-Sheet 1

Fig. 2

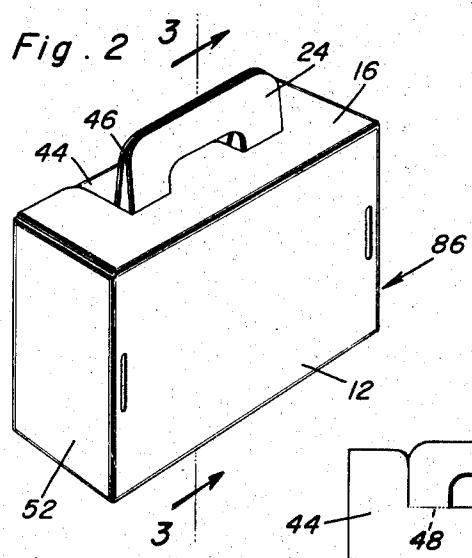

Fig. 3

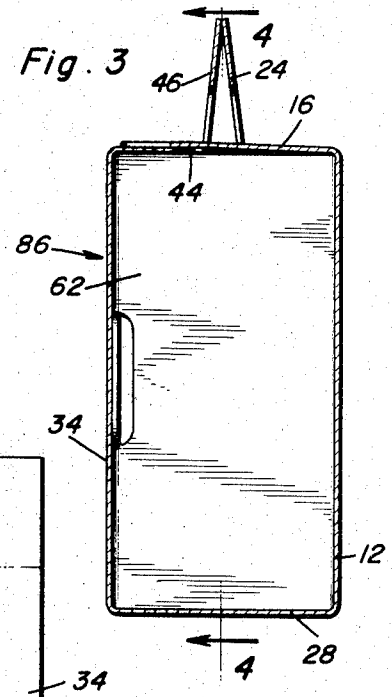

Fig. 1

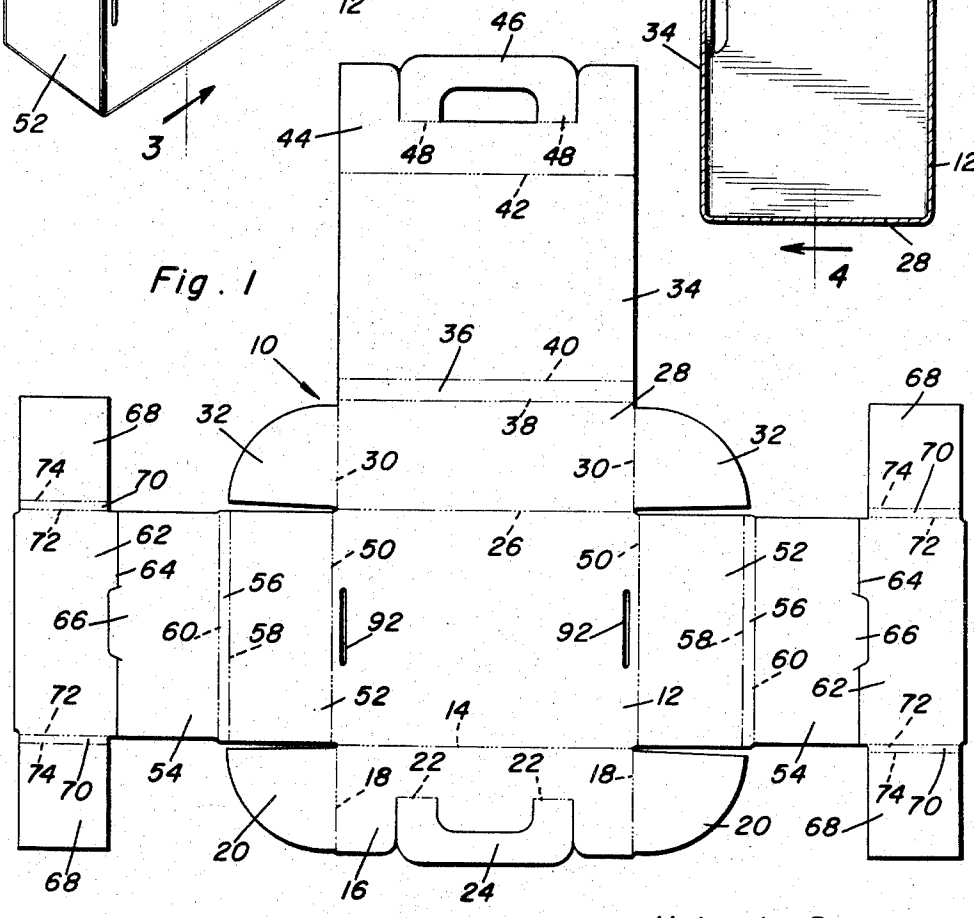

Helen L. Bass
INVENTOR.

BY Clarence A. O'Brien and Harvey B. Jacobson
Attorneys

Jan. 20, 1959 H. L. BASS 2,869,770

LUNCHBOX CONSTRUCTION

Filed June 8, 1956 2 Sheets-Sheet 2

Fig. 4

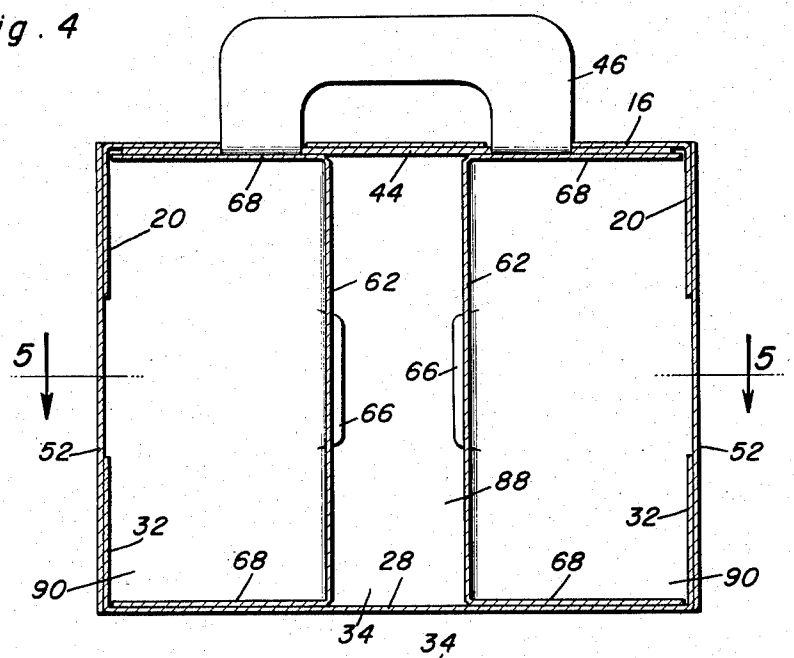

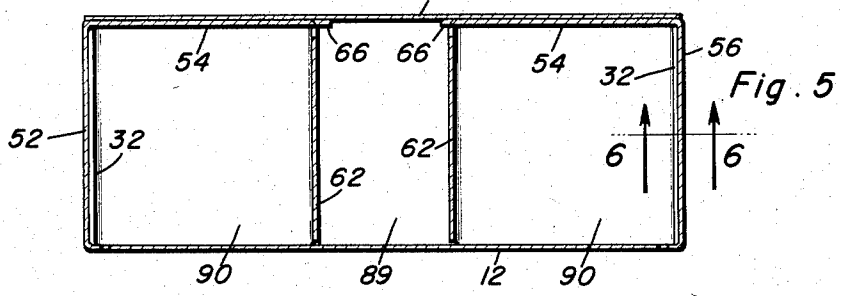

Fig. 5

Fig. 7

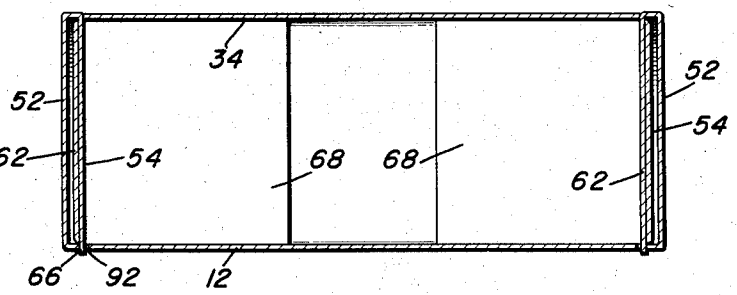

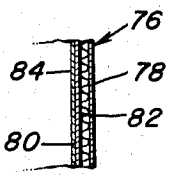

Fig. 6

Helen L. Bass
INVENTOR.

BY Clarence A. O'Brien and Harvey B. Jacobson
Attorneys

United States Patent Office 2,869,770 Patented Jan. 20, 1959

2,869,770

LUNCHBOX CONSTRUCTION

Helen L. Bass, Chicago, Ill., assignor to Amalgamated Bass Prince Inventions, Incorporated, Chicago, Ill., a corporation of Illinois

Application June 8, 1956, Serial No. 590,153

3 Claims. (Cl. 229—27)

This invention relates in general to new and useful improvements in containers, and more specifically to an improved lunchbox.

While in many instances it has been desired to produce a lunchbox for children which is relatively inexpensive and eventually disposable, a main problem has been that when a lunchbox is made of a relatively cheap material, such as cardboard, and any matter such as grease and the like is spilled within the container, it becomes unsanitary and is not reusable.

It is therefore the primary object of this invention to provide an improved lunchbox which is formed of a cardboard material and which has an inner lining formed of a suitable foil, preferably aluminum foil, whereby the box is sanitary and may be easily wiped clean with a damp rag so that the box may be reused a plurality of times.

Still another object of this invention is to provide an improved lunchbox construction which is formed of a relatively inexpensive material, such as cardboard, and is at the same time insulated so that food may be properly kept therein over a period of time, the cardboard material having an inner aluminum foil lining which is desirable because of its insulating characteristics.

Still another object of this invention is to provide an improved lunchbox construction which is formed from a cardboard blank and which has overlapping side portions which are provided with handle forming members, the handle forming members when gripped in one hand retaining a cover of the lunchbox in a closed position.

A further object of this invention is to provide an improved lunchbox construction which includes flanges which may be selectively positioned to divide the lunchbox into a plurality of separate and insulated compartments, or which may be folded so as to be disposed at opposite ends of the lunchbox whereby the lunchbox has a single compartment.

These together with other objects and advantages which will become subsequently apparent reside in the details of construction and operation as more fully hereinafter described and claimed, reference being had to the accompanying drawings forming a part hereof, wherein like numerals refer to like parts throughout, and in which:

Figure 1 is a plan view of the blank utilized in forming the box which is the subject of this invention;

Figure 2 is a perspective view of the lunchbox as viewed from the bottom thereof;

Figure 3 is an enlarged transverse sectional view taken substantially upon the plane indicated by the sectional line 3—3 of Figure 2 and shows the specific details of the construction of the box including the details of the handle forming members;

Figure 4 is an enlarged sectional view taken substantially upon the plane indicated by the section line 4—4 of Figure 3 and shows the manner in which the blank may be folded to form a lunchbox having a plurality of separate compartments;

Figure 5 is an enlarged view taken substantially upon the plane indicated by the section line 5—5 of Figure 4 and shows the general arrangement of the compartments;

Figure 6 is an enlarged fragmentary sectional view taken substantially upon the plane indicated by the section line 6—6 of Figure 5 and shows the specific details of the material from which the lunchbox is formed; and

Figure 7 is an enlarged sectional view similar to Figure 5 and shows the flanges folded to be disposed adjacent the end walls of the lunchbox whereby the box is in the form of a single compartment.

Referring now to Figure 1 in particular, it will be seen that there is illustrated a blank from which the lunchbox is formed, the blank being referred to in general by the reference numeral **10**. The blank **10** includes a centrally disposed bottom wall **12** which is generally rectangular in outline. Integrally connected to the bottom wall **12** by a fold line **14** along a side edge thereof is a side wall portion **16**. The side wall portion **16** has integrally connected to opposite ends thereof along fold lines **18** flaps **20**. Formed from these side wall portions **16** and hingedly connected thereto along fold lines **22** is a handle forming member **24**.

Integrally connected to the opposite side of the bottom wall **22** along a fold line **26** is a side wall **28**. Hingedly connected to the side wall **28** at opposite ends thereof along fold line **30** are flaps **32**.

Formed integrally with the side wall **28** remote from the bottom wall **12** is a cover or top wall **34**. The cover **34** is separated from the side wall **28** by an intermediate portion **36** which is connected to the side wall **28** by a fold line **38** and to the cover **34** by a fold line **40**. The purpose of the intermediate portion **36** is to permit the proper bending of the cover **34** with respect to the side wall **28**.

Integrally connected to the cover **34** remote from the side wall **28** along a fold line **42** is a side wall forming portion **44**. The side wall forming portion **44** has formed therefrom a handle forming member **46** which is connected thereto along fold lines **48**.

Integrally connected to opposite ends of the bottom wall **12** along fold lines **50** are end walls **52**. Integrally connected to each end wall **52** is an intermediate flap **54**, the intermediate flap **54** being separated from its associated end wall **52** by an intermediate portion **56**. Each intermediate portion **56** is connected to its associated end wall **52** along a fold line **58** and to its associated intermediate flange **54** along a fold line **60**.

Formed integral with each intermediate flange **54** is an alternate flange **62**, the alternate flange **62** being connected to the intermediate flange **54** along a weakened fold line **64**. Also, there is cut from the alternate flange **62** a tab **66** which is integral with the associated intermediate flange **54**.

Each of the alternate flanges **62** is provided with a flap **68** at opposite ends thereof. Each flap **68** is separated from its alternate flange **62** by means of an intermediate portion **70** to facilitate folding thereof. The intermediate portion **70** of each of the flaps **68** is connected to its alternate flange **62** along a fold line **72** and to its flap **68** along a fold line **74**.

Referring now to Figure 6 in particular, it will be seen that the blank **10** is formed from cardboard material which is referred to in general by the reference numeral **76**. The cardboard material **76** includes an outer layer **78** and an inner layer **80**. The layers **78** and **80** are disposed in spaced relation and connected together by a corrugated intermediate layer **82**. Formed on the inner face of the inner layer **80** is a lining **84** which is preferably in the form of an aluminum coil.

Referring now to Figures 2, 3, 4 and 5 in particular, it will be seen that there is illustrated a lunchbox construction which is referred to in general by the reference numeral **86**. The lunchbox **86** is formed from the blank

10 and is generally rectangular in outline. It is to be noted that when the blank 10 is properly folded, the side wall forming portion 44 is disposed inwardly of the side wall forming portion 16 and the handle forming members 24 and 46 extend outwardly therefrom in converging relation. Thus when the handle forming members 24 and 46 are properly gripped, they retain the cover 34 in its proper position.

Referring now to Figures 4 and 5 in particular, it will be seen that the interior of the lunchbox 86 is divided into a narrow central compartment 88 and outer compartments 90. This is accomplished by permitting the intermediate flange 54 to be horizontally disposed intermediate the cover 34 and its associated alternate flange 62 to be disposed normal to the bottom wall 12 of the cover 34. Thus the alternate flanges 62 form partitions in the interior of the lunchbox 86.

Inasmuch as the flanges 54 and 62 are insulated, it will be seen that the compartments 88 and 90 are insulated with respect to each other so that, if desired, warm foods may be carried in one of the compartments and relatively cold foods may be carried in the other of the compartments.

When it is desired to utilize all of the interior space of the lunchbox 86, it may be in the form of a single compartment. This is accomplished by reversely folding the alternate flange 62 upon the intermediate flange 54 permitting the two to be disposed normal to the bottom wall 12 of the cover 34, as is best illustrated in Figure 7. The flanges 54 and 62 are retained in this position by passing the tabs 66 of each of the intermediate flanges 54 through a suitable slot 92 formed in the bottom wall 12.

From the foregoing description of the lunchbox 86, it will be readily apparent that there has been devised a lunchbox which may be utilized by school children and the like and which is so constructed while it is formed of relatively inexpensive material, it has the desired insulating qualities. Further, inasmuch as the insulation of the lunchbox 86 stems primarily from the use of cardboard with an aluminum foil lining, it will be readily apparent that the lunchbox 86 is sanitary. Also, it may be reused inasmuch as the aluminum foil lining may be wiped with a damp rag or the like for the purposes of cleaning the lunchbox 86. When used by school children, the lunchbox 86 may be folded to a flat state after use and carried home with one's books or the like in a convenient manner.

While the lunchbox 86 has been primarily described for use by school children, the invention is not so limited in use. If desired, it may be used for packing hot lunches, and boxed lunches for picnics and the like.

The foregoing is considered as illustrative only of the principles of the invention. Further, since numerous modifications and changes will readily occur to those skilled in the art, it is not desired to limit the invention to the exact construction and operation shown and described, and accordingly, all suitable modifications and equivalents may be resorted to, falling within the scope of the invention as claimed.

What is claimed as new is as follows:

1. A lunchbox construction comprising a generally rectangular box including an integral hingedly disposed cover and end walls, extensions on said end walls extending into said box and dividing said box into a plurality of separate compartments, each of said extensions including a wide compartment covering intermediate flange and a partition forming ultimate flange, said extensions defining two outer enclosed compartments, said partition forming ultimate flanges defining a central open compartment.

2. A lunchbox construction comprising a generally rectangular box including an integral hingedly disposed cover and end walls, extensions on said end walls extending into said box and dividing said box into a plurality of separate compartments, each of said extensions including a wide compartment covering intermediate flange and a partition forming ultimate flange, said extensions defining two outer enclosed compartments, said partition forming ultimate flanges defining a central open compartment, the interior of said box having an aluminum foil lining whereby said box is both insulated and sanitary, said extensions having aluminum foil lining whereby said compartments are insulated relative to each other.

3. A lunchbox construction comprising a generally rectangular box including an integral hingedly disposed cover and end walls, extensions on said end walls extending into said box and dividing said box into a plurality of separate compartments, each of said extensions including a wide compartment covering intermediate flange and a partition forming ultimate flange, said extensions defining two outer enclosed compartments, said partition forming ultimate flanges defining a central open compartment, said box including a bottom wall, a first side wall portion integrally connected to said bottom wall, a second side wall portion carried by said cover, said first and second side wall portions being in overlapped relation, said side wall portions having handle forming members disposed in adjacent relation and retaining said cover in a closed position.

References Cited in the file of this patent

UNITED STATES PATENTS

2,217,503	Bergstein	Oct. 8, 1940
2,235,800	Daly	Mar. 18, 1941
2,319,919	Clark	May 25, 1943
2,488,121	Greve	Nov. 15, 1949
2,637,484	Buttery	May 5, 1953
2,658,661	Aquino	Nov. 10, 1953
2,707,587	Wittstein	May 3, 1955