June 21, 1966 E. S. GREASON 3,256,976

GUSSETED, CONTOURED PLASTIC BAG FOR GARMENT PACKAGING

Filed March 9, 1965

FIG. 1

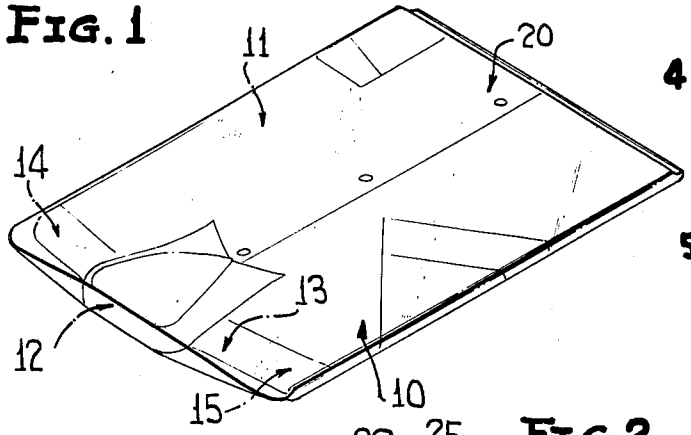

FIG. 3

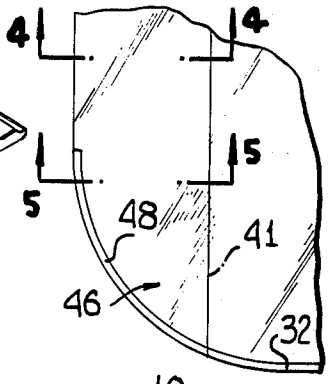

FIG. 2

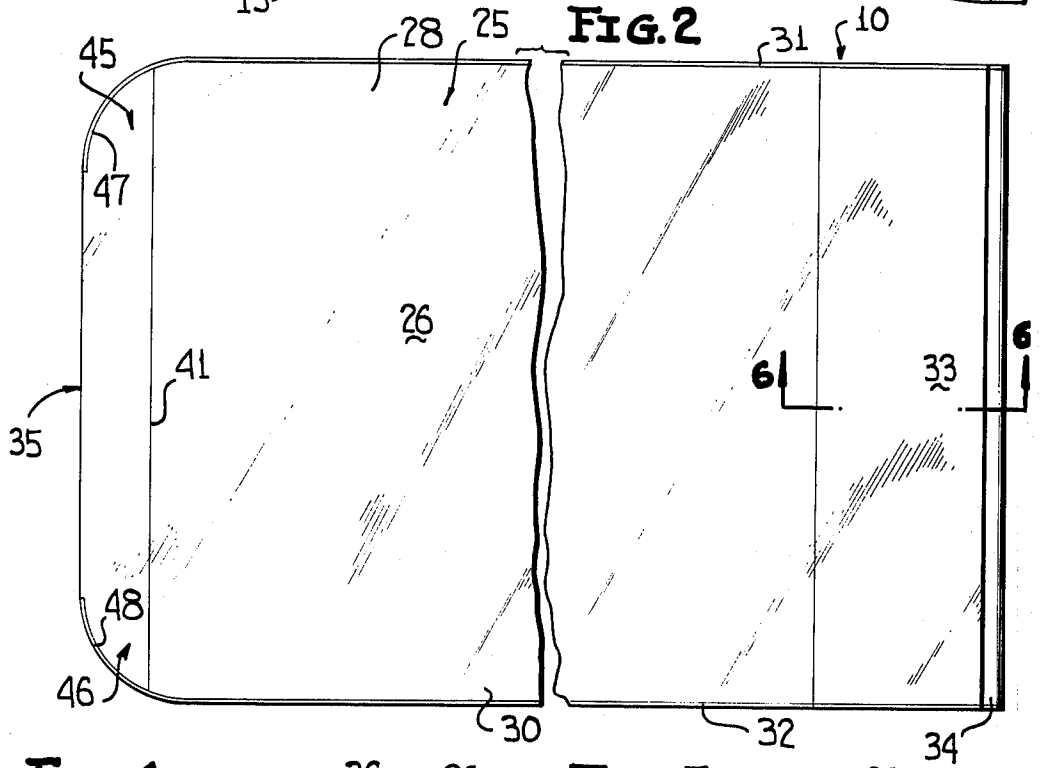

FIG. 4

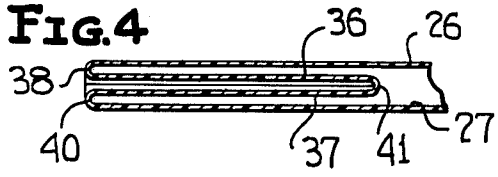

FIG. 5

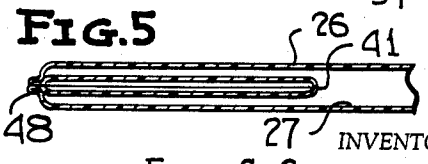

FIG. 6

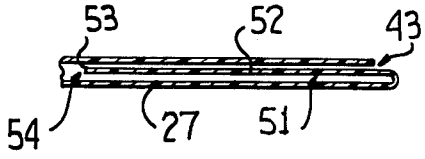

INVENTOR
EARL S. GREASON

BY Mason, Porter, Miller & Brown
ATTORNEYS

United States Patent Office 3,256,976 Patented June 21, 1966

3,256,976

GUSSETED, CONTOURED PLASTIC BAG FOR GARMENT PACKAGING

Earl S. Greason, Darien, Conn., assignor to Continental Can Company, Inc., New York, N.Y., a corporation of New York

Filed Mar. 9, 1965, Ser. No. 438,246
2 Claims. (Cl. 206—46)

This invention relates to a novel bag, and in particular, to a bag particularly adapted for the packaging therein of garments, such as shirts and other irregularly contoured wearing apparel, and is characterized by a gusseted bottom closed at opposite corners by contoured seals which eliminate unsightly and undesirable conventional "dog ears" and conform the corners to, for example, the shoulders of a packaged shirt and a medial unsealed portion of the gusseted bottom to the shirt collar, thus forming a more esthetic and advantageous package than heretofore presently known or provided.

An object of this invention is to provide a novel bag which is preferably constructed from heat sealable material and flattened to define front and rear walls joined by side edge portions, the bag including an opened top and a gusseted bottom, the gusseted bottom defining with each of the side edge portions an associated corner of the bag, and a pair of heat seals converging toward each other across the gusseted bottom from associated side edge portions to form closed corners and a medial open portion of the gusseted bottom between the corners whereby the bag can accommodate irregularly shaped articles packaged therein with the corners of the bag accommodating relatively thin portions of an article and the open medial portion of the gusseted bottom between the corners accommodating a relatively thicker portion of a packaged article.

A further object of this invention is to provide improvements in gusseted bags of the type including a generally tubular flattened body defined by opposing body wall panels, a gusset joining the wall panels at a first of first and second opposite end portions of the body, the gusset having first and second gusset panels joined along respective first and second fold lines to respective ones of the body wall panels and another fold line joining the first and second gusset panels to each other inwardly of the first and second fold lines toward the second end portion of the body whereby the gusset normally opens away from the second end portion, and closing means for closing end portions of the normally open gusset for preventing the closed end portions opening away from the second end portion, the closing means each being a heat seal bonding portion of the first and second gusset panels and the wall panels to each other, the heat seals generally converging toward each other and being outwardly convexed in configuration, whereby an irregularly contoured article, such as a shirt, can be packaged in the bag with the convex heat seal portions conforming to the shoulders of the shirt and the unsealed portion of the gusseted bottom between the heat seals opening to accommodate the shirt neck to thus form an esthetic package.

A further object of this invention is to provide a novel package including an article and a bag, the article being generally rectangular and of a predetermined length, width and thickness, the thickness of the article being generally uniform except for a relatively thicker portion adjacent one edge of the article, the article being positioned in the bag with the thicker portion adjacent a gusset of the bag, the gusset including an open medial portion accommodating the thicker portion of the article and closed opposite end portions accommodating corners of the article at each side of the thicker portion, and the closed opposite end portions and corners being similarly

contoured whereby the bag conforms to the general configuration of the article.

Still another object of this invention is to provide a novel method of forming a gusseted bag by forming a sheet of heat-sealable material into a pair of opposed planar wall panels joined to each other by an outwardly opening gusset, transporting the formed material along a predetermined path, heat sealing longitudinal edge portions of the formed material to form a generally tube-like member having an open mouth opposite the gusset, and heat sealing the tube-like member across opposite end portions of the gusset between an associated longitudinal edge portion and a terminal portion of the wall panels at the gusset.

With the above, and other objects in view that will hereinafter appear, the nature of the invention will be more clearly understood by reference to the following detailed description, the appended claims and the several views illustrated in the accompanying drawing:

In the drawing:

FIGURE 1 is a top perspective view of a novel package formed in accordance with this invention, and illustrates a folded garment packaged in a bag having a gusseted bottom contoured at opposite corners to accommodate the shoulders of the garment and open at a medial portion between the corners to accommodate a collar of the garment.

FIGURE 2 is a fragmentary top plan view of the novel bag of this invention, and illustrates a generally convex line of heat sealing across a gusset at opposite corners of the bag bottom.

FIGURE 3 is an enlarged fragmentary top plan view of the lowermost corner of the bag of FIGURE 2, and more clearly illustrates the line of heat sealing at this corner.

FIGURE 4 is an enlarged fragmentary sectional view taken generally along line **4—4** of FIGURE 3, and illustrates a pair of unsealed panels defining an outwardly opening unsealed gusset portion of the gusseted bottom between the corners of the bag.

FIGURE 5 is an enlarged fragmentary sectional view taken along line **5—5** of FIGURE 3, and illustrates the panels of the gusset sealed to close the gusset at the corner of the bag.

FIGURE 6 is an enlarged fragmentary sectional view taken generally along line **6—6** of FIGURE 2, and illustrates an open mouth of the bag and a flap in position closing the same.

Referring to the drawing in particular, a novel bag constructed in accordance with this invention is best illustrated in FIGURES 2 and 3 of the drawing and is generally referred to by the reference numeral **10**. The bag **10** is particularly adapted for the packaging therein of a garment **11** (FIGURE 1), such as a folded shirt, sweater, jacket or other articles which are similarly of a generally rectangular configuration of uniform and predetermined length, width and thickness but include portions **12**, such as a shirt collar, which are relatively thicker than the predetermined thickness of the article and are generally located adjacent an edge **13** of the article or shirt **11** and between opposite corner portions **14**, **15**, which may, for example, be the folded shoulders of the shirt **11**. The bag **10** and the article **11** therein define a package generally referred to by the reference numeral **20**. The package **20** is illustrated for purposes of description as including the shirt **11** as a portion thereof, but it is to be understood that any articles similarly irregularly dimensioned and contoured is intended to be encompassed by this description and form a part of the package **20**.

The bag **10** generally includes a flattened tubular body **25** composed of front and rear walls, **26** and **27** respec-

tively. The front and rear body walls or panels **26, 27** are generally rectangular in outline and include opposite overlying longitudinal side edge portions **28, 30** heat sealed along respective lines of heat sealing **31, 32**. The lines of heat sealing **31, 32** extend in generally parallel relationship to each other from top portions **33, 34** of the respective walls **26, 27** toward the gusseted bottom **35** of the bag **10**, terminating at tangential intersections with the respective lines of heat sealing **47, 48** across the corner portions **45, 46** of the gusset **35**.

The gusseted bag bottom or the gusset **35** is best illustrated in FIGURES 4 and 5 of the drawing and includes first and second gusset panels **36, 37** respectively joined along respective first and second folds or fold lines **38, 40** to the respective front and rear panels **26, 27**. The gusset panels **36, 37** are joined to each other along another fold or fold line **41** between the front and rear panels **26, 27** and spaced from the fold lines **38, 40** toward the top edge portions **33, 34** of the bag **10**. The gusset **35** is thereby constructed to open generally away from a normally opened top or mouth **43** (FIGURE 6) of the bag **10**.

Opposite end or corner portions **45, 46** of the gusset **35** are closed by respective lines of heat sealing **47, 48** which merge with the parallel lines of heat sealing **31, 32** respectively adjacent the fold **41**, as is best illustrated in FIGURE 2 of the drawing. The lines of heat sealing **47, 48** secure the panels **26, 27, 36** and **37** completely to each other, as is best illustrated in FIGURE 5 of the drawing with respect to the line of heat sealing **48**. The gusset panels **36, 37** are thus closed along the lines of heat sealing **47, 48** but are open between the ends (unnumbered) of these lines of heat sealing, as is clearly shown in FIGURE 4 of the drawing.

The package **20** is formed by inserting the shirt or similar article **11** into the bag **10** through the open mouth **43** thereof. As the shirt **11** is moved toward the gusseted bottom **35**, the thicker (or higher) collar **12** of the shirt **11** gradually forces the medial portion of the gusset **35** between the lines of heat sealing **47, 48** to expand or open and accommodate the full height of the collar **12**, in the manner clearly illustrated in FIGURE 1 of the drawing. The shoulders **14, 15** are less thick than the collar **12** and no expansion of the guesset **35** is necessary to accommodate the shoulders **14, 15** nor is such expansion provided for by the respective corners **45, 46**. The corner **45** remains closed because of the line of heat sealing **47** and snugly and conformingly receives the folded shoulder **14** of the shirt **11** while the corner **46** similarly accommodates the folded shoulder **15**. The gusseted bag bottom **35** thus eliminates conventional unsightly "dog ears" at the corners of conventional bags corresponding to the corners **45, 46** of the bag **10** and provides a structure which substantially conforms completely to the entire contour of the packaged article **11** because of the contoured lines of heat sealing **47, 48** which prevent the panels **36, 37** of the gusset **35** from opening in these areas, yet to conform to the portions **14, 15** of the packaged article **11** and permit expansion where required.

The bag **10** is also provided with a pocket **51** into which an end portion of the article **11** opposite the collar **12** is inserted to prevent inadvertent or accidental removal of the article **11** from the open mouth **43**. The pocket **51** is defined by a reversely folded flap portion **52** of the bottom panel **27**. The flap **52** extends across the entire width of the bag **10** and terminates at a free edge **53** defining a pocket mouth **54**. The lines of heat sealing **31, 32** seal opposite edge portions of the flap **52** to both the top panel **26** and the bottom panel **27**. After the shirt is inserted in the bag **10** in the manner heretofore described through the mouth **43** between the top wall **26** and the flap **52**, the last portion of the article **11** being packaged in the bag is moved toward the gusseted bottom **35** beyond the terminal edge **53** of the flap **52**, thereafter this last entering portion of the article **11** is inserted in the pocket **51** through the pocket mouh **54**. The foldable nature of the article **11** permits this manipulation with little difficulty.

The novel bag **10** of this invention has been thus far described without reference to the particular material from which the bag is constructed or the manner of manufacturing the same. In accordance with a preferred form of this invention, the material of the bag **10** is any flexible packaging material which is capable of being folded to form the bottom gusset **35** and which can be cut and sealed, preferably heat sealed, to form the convexly contoured corners or and portions **45, 46**. The material of the bag **10** is preferably transparent or semi-transparent and may be, for example, polyethylene or similar plastic film or sheet material.

The bags of this invention are preferably constructed from a web of sheet material (not shown) which is transported along a predetermined path and folded to form a gusseted portion and opposed wall portions. The folded web is guided through a station and forms the contour seal **47** on a leading bag and the contour seal **48** on a trailing bag, or vice versa. Simultaneously, the generally cusp-shaped piece of undesired material between the contoured seals of adjacent leading and trailing bags is cut out and pneumatically or mechanically discarded. At a subsequent station a single straight line side seal is made running from the top of each bag to the peak of each of the cusp-shaped openings defined by the removed material between the contour bottom of leading and trailing bags. This side seal mechanism has a hot wire that simultaneously forms the side seals **31, 32** and cuts them apart.

While a preferred form of the bag of this invention and the method of manufacturing the same has been disclosed herein, modifications in both the bag and the method will be readily apparent to those skilled in the art after reviewing this disclosure and are considered a part thereof. For example, the bag **10** need not include the pocket **51** and this particular bag top construction may be eliminated or alternately substituted for by other bag closing means. For example, the panel **52** need not be reversely folded prior to the formation of the heat seals **31, 32**, but may merely project beyond the top portions **33, 34** of the bag **10**. Upon this construction, the flap or panel **52** may then merely be inserted into the bag **10** after the shirt **11** or similar article has been packaged therein.

It is also within the scope of this invention to provide the bag **10** with an opening or weakening means, such as suitable perforations, at the gusset **35** substantially medially between the corners **45, 46** to adapt the bag for use with shirts or similar garments when hung upon conventional clothes hangers. In this case, the bag **10** would be of a sufficient width to accommodate a garment in its unfolded condition or, alternatively, a bag of a sufficient size to accommodate an adult-size garment may be provided with such an opening and instructions advising consumers that the bag could be used with smaller infant-size clothing for storage or other purposes in conjunction with hangers in a known manner.

From the foregoing, it will be seen that novel and advantageous provisions have been made for carrying out the desired end. However, attention is again directed to the fact that additional variations may be made in this invention without departing from the spirit and scope thereof as defined in the appended claims.

I claim:

1. A package comprising an article and a bag, said article being generally rectangular and of a predetermined length, width and thickness, the thickness of said article being generally uniform except for a relatively thicker portion and adjacent at least one longitudinal edge of said article, said article being positioned in said bag, said bag including a generally flattened tubular body having front and rear walls, said front and rear walls being generally rectangular in outline and including opposite overlying

side edge portions and top edge portions, said side edge portions being joined to each other to define the generally tubular construction of said body, said body terminating in a gusseted bottom, said article being positioned in said body with the thicker portion thereof adjacent said gusseted bottom, said gusseted bottom including first and second gusset panels joined along respective first and second fold lines to the respective front and rear panels, said gusset panels being joined to each other along another fold line between the front and rear walls spaced from said first and second fold lines toward said top edge portions whereby said gusseted bottom opens away from said top, means closing said gusseted bottom at opposite end portions thereof, said closing means being in the form of a seal at each end portion of the gusseted bottom extending between said another fold line and said first and second fold lines, said gusseted bottom having an expandable portion between said seals, said seals converging toward each other from said another fold line toward said first and second fold lines, said seals each being generally arcuate in configuration, portions of said article

to either side of said thicker portion being in conforming relationship to said seals, and said thicker portion being received by said expandable portion.

2. The package as defined in claim 1 wherein said arcuate seals are of an outward convex configuration.

References Cited by the Examiner

UNITED STATES PATENTS

1,878,771	9/1932	Goldsmith	223—98
2,265,075	12/1941	Knuetter.	
2,322,601	6/1943	Strauss	223—98
2,935,241	5/1960	Brady	229—53
3,117,712	1/1964	Kugler	229—62

FOREIGN PATENTS

1,077,360	4/1934	France.

THERON E. CONDON, *Primary Examiner.*

LOUIS G. MANCENE, *Examiner.*

W. T. DIXSON, *Assistant Examiner.*