PCT WORLD INTELLECTUAL PROPERTY ORGANIZATION
International Bureau

INTERNATIONAL APPLICATION PUBLISHED UNDER THE PATENT COOPERATION TREATY (PCT)

(51) International Patent Classification 6 : B44C 5/04, 1/18, 1/20

A1

(11) International Publication Number: **WO 95/31343**

(43) International Publication Date: 23 November 1995 (23.11.95)

(21) International Application Number: PCT/GB95/01114

(22) International Filing Date: 17 May 1995 (17.05.95)

(30) Priority Data:

9409813.4	17 May 1994 (17.05.94)	GB
9412921.0	28 June 1994 (28.06.94)	GB

(81) Designated States: AM, AT, AU, BB, BG, BR, BY, CA, CH, CN, CZ, DE, DK, EE, ES, FI, GB, GE, HU, IS, JP, KE, KG, KP, KR, KZ, LK, LR, LT, LU, LV, MD, MG, MN, MW, MX, NO, NZ, PL, PT, RO, RU, SD, SE, SG, SI, SK, TJ, TT, UA, US, UZ, VN, European patent (AT, BE, CH, DE, DK, ES, FR, GB, GR, IE, IT, LU, MC, NL, PT, SE), OAPI patent (BF, BJ, CF, CG, CI, CM, GA, GN, ML, MR, NE, SN, TD, TG), ARIPO patent (KE, MW, SD, SZ, UG).

Published
With international search report.
Before the expiration of the time limit for amending the claims and to be republished in the event of the receipt of amendments.

(71) Applicant *(for all designated States except US)*: PYRAMID SCREEN PRINT LIMITED [GB/GB]; Milner Way, Ossett, West Yorkshire WF5 9JE (GB).

(72) Inventors; and

(75) Inventors/Applicants *(for US only)*: FINDLEY, Philip [GB/GB]; The Quillet, Linton Lane, Linton, Nr Wetherby LS22 4HH (GB). MORTIMER, Keith [GB/GB]; Hunters Lodge, Finkle Street, Woolley WF4 2LA (GB). MARSHALL, David [GB/GB]; Mole End Cottage, 2 Front Street, Tealby, Market Rasen LN8 3XZ (GB).

(74) Agent: BAILEY WALSH & CO.; 5 York Place, Leeds LS1 2SD (GB).

(54) Title: THE COATING OF SURFACES OF ARTICLES

(57) Abstract

The invention relates to the provision of coatings for articles, said coatings provided to enhance the visual appearance of articles such as furniture, doors, sporting goods or in general any articles made from a relatively cheap material where the appearance can be enhanced by providing a coating thereon. Typically the coatings can be provided to give the appearance that the article has been manufactured from a more expensive material, to provide advertising material thereon or generally to provide a more pleasing appearance to the eye by providing features and shapes which are not normally present or achievable with conventional coatings.The invention provides a coating formed of a plastic sheet material to which has been applied at least one ink pattern which is viewable and said ink pattern is applied and the sheet material is of sufficient flexibility to enhance the appearance of the article and also to mimic the effect of contour changes of the article by pressing the coating in register with the article. There is also provided a method of manufacturing the coating of the invention and of applying the coating to the articles and provides a coating which is both novel known coating methods and provides increases flexibility and scope of visual and/or tactile effects which can be created.

FOR THE PURPOSES OF INFORMATION ONLY

Codes used to identify States party to the PCT on the front pages of pamphlets publishing international applications under the PCT.

AT	Austria	**GB**	United Kingdom	**MR**	Mauritania
AU	Australia	**GE**	Georgia	**MW**	Malawi
BB	Barbados	**GN**	Guinea	**NE**	Niger
BE	Belgium	**GR**	Greece	**NL**	Netherlands
BF	Burkina Faso	**HU**	Hungary	**NO**	Norway
BG	Bulgaria	**IE**	Ireland	**NZ**	New Zealand
BJ	Benin	**IT**	Italy	**PL**	Poland
BR	Brazil	**JP**	Japan	**PT**	Portugal
BY	Belarus	**KE**	Kenya	**RO**	Romania
CA	Canada	**KG**	Kyrgystan	**RU**	Russian Federation
CF	Central African Republic	**KP**	Democratic People's Republic of Korea	**SD**	Sudan
CG	Congo			**SE**	Sweden
CH	Switzerland	**KR**	Republic of Korea	**SI**	Slovenia
CI	Côte d'Ivoire	**KZ**	Kazakhstan	**SK**	Slovakia
CM	Cameroon	**LI**	Liechtenstein	**SN**	Senegal
CN	China	**LK**	Sri Lanka	**TD**	Chad
CS	Czechoslovakia	**LU**	Luxembourg	**TG**	Togo
CZ	Czech Republic	**LV**	Latvia	**TJ**	Tajikistan
DE	Germany	**MC**	Monaco	**TT**	Trinidad and Tobago
DK	Denmark	**MD**	Republic of Moldova	**UA**	Ukraine
ES	Spain	**MG**	Madagascar	**US**	United States of America
FI	Finland	**ML**	Mali	**UZ**	Uzbekistan
FR	France	**MN**	Mongolia	**VN**	Viet Nam
GA	Gabon				

The Coating of Surfaces of Articles

This invention relates to the coating of surfaces of articles to produce a surface effect and finish which is decorative and protective when applied to the article. Typically, but not exclusively, the articles to be coated are surfaces of items of furniture such as doors, kitchen units, work surfaces and suchlike, but in general any article where the application of a coating having a certain appearance would be beneficial to the appearance of the article.

At present, and with reference to kitchen unit doors for example only, the doors are manufactured either from solid wood using traditional, but expensive, techniques or from Medium Density Fibre (MDF) or other cheap board material and then coated to provide an effect which has the appearance of, for example, a wood grain finish or combinations of colours and patterns. The coating is applied in an attempt to give the effect that the door has been manufactured from a more expensive material and/or to give the door a more desirable appearance in terms of colour or pattern. This coating process can be used on articles ranging from articles of furniture through to sporting goods.

In a first known method the coating comprises a sheet plastic material which acts as a base and onto which are applied second, third or fourth layers of PVC sheets. The second and subsequent layers are provided in differing colours, configurations and/or are embosssed to produce a tactile surface effect. In one embodiment a second layer of PVC material is applied over at least a portion of the first layer which is a different colour. Part of the second layer is then removed by routing (scraping away) material to expose the first layer through the routed portions and hence create a coating with an external appearance of two colours having,

for example, a border which is the colour of the first layer surrounding the second layer.

The layers of plastics sheet material are typically applied to the article by means of applying a layer of adhesive to either or both of the plastics sheet material and the article.

Alternatively, a coating conventionally known as a veneer is applied to the article. The range of surface finishes which can be achieved using veneers is limited and is particularly related to the creation of effects which mimic particular types of wood grains. The veneer is applied by adhesive but they are normally inflexible and cannot easily be applied to curved or indented surfaces.

A further coating method is to print or emboss a continuous pattern onto plastics sheet material. The sheet material is then used to coat articles with a portion of the continuous pattern. This coating method causes wastage in the form of the cut off sheet material and furthermore the surface effect achieved is limited, repetitive and relatively simplistic due to the continuous nature of the printing and hence, while, for example, a wood grain can be printed, the grain can only run in one direction along the article. This causes the article to have the appearance of having been formed from a single piece of wood with the grain running in one direction rather than what would be the actual fact if it were properly made from wood where the article would be formed from several pieces of wood joined together and with grains running in at least two directions. Thus the appearance created is not sufficiently realistic to mask the fact that a cheap base material has been used and this provides an illustration of the inherent inflexibility of this type of coating process.

While each of the above coating systems are used extensively in an extremely large marketplace all are regarded as being relatively expensive and inflexible in the range of uses and the effects which can be provided. For example, and with regard to the use of multilayered PVC sheets, the requirement to use layers of sheets to provide the required surface effect is costly and still provides only a limited effect. Furthermore no complex design effects can currently be created on existing coatings.

The aim of the present invention is to provide a coating for application to the surface of an article which can be produced and adapted to provide a plurality of surface finish effects of considerable complexity.

The present invention provides a coating for application to a surface of an article, said coating comprising a sheet of plastics material and wherein there is applied to at least one face of the sheet, at least one ink pattern, said sheet applied in register with the article to adhere to a surface thereof to coat the same with the ink pattern viewable.

Typically a plurality of different ink patterns are applied to the sheet material to form the coating and the patterns can be of different colours and configurations and which, when combined, form the viewable pattern of the coating.

Typically the outer limits of the printed ink patterns define the part of the sheet material which forms the coating for the article.

Preferably a protective layer such as a layer of lacquer is applied over the viewable pattern to protect the same from damage.

Preferably the plastics material is of a thickness which is in a range of 200 to 500 microns and is sufficiently flexible to allow the sheet to be fitted into the contours of the surface of the article. The plastics material can be PVC or styrene.

In one embodiment the sheet is applied to the surface of the article in register therewith and the viewable pattern printed on the coating is such as to mimic the effect of the contour changes on the surface of the article on the viewable pattern. For example, if the surface includes indents the pattern includes shaded areas which, when fitted, match with the indents.

In a further feature the ink patterns, if applied to the outer surface of the coating, also create an embossed effect and, if required, the sheet material is embossed to produce a tactile effect in addition to the viewable pattern.

Typically the coating is applied to the surface of an article of furniture.

The sheet material is any of PVC, styrene or any other suitable plastics sheet material and the sheet material can be of any colour or can be substantially transparent. When the sheet material is coloured the appropriate colour is selected to minimise the requirement for subsequent ink pattern application.

When the sheet material used is transparent, ink patterns can be printed on either or both of the outer and/or inner faces of the sheet. When the ink pattern is applied to the inner face the sheet material acts as a protective barrier while allowing the pattern to be viewed through the same. When the sheet is transparent the colour of the article to which the

same is applied can be used as an integral part of the viewable pattern created.

In a second aspect of the invention there is provided an article comprising a base having at least one contoured surface onto which is applied a coating of plastics sheet material, said sheet material including a pattern printed thereon and wherein the coating is applied to the surface in register therewith such that the pattern enhances the appearance of the surface.

In one embodiment the pattern includes features associated with the contours on the article. The contours can be an indented section, the article is a door, and the pattern includes a shaded section of the same shape as the indented section.

In a further embodiment the pattern created may also include a series of lines angularly arranged throughout the pattern to create an impression that the article has been constructed from a plurality of components joined together as opposed to the actual fact that the base is one complete piece. Further features may include printed representations of joining and fastening components.

In a further aspect of the invention there is provided a method for forming a coating for the surface of an article comprising selecting a sheet of plastics material and applying to a face of said sheet at least one ink pattern by printing to define a coating to be adhered to the said article and having a pattern thereon which is viewable.

Typically the parameters of the ink patterns applied define the parameters of the coating formed on the sheet material.

Typically an ink of a first colour is applied to the sheet material in a first pattern followed by the application of an ink of a second colour in a second pattern and, if required, successive ink patterns can be applied thereafter to produce the desired viewable pattern.

In one embodiment, the ink patterns are applied by a screen-printing process but the patterns may equally be applied by litho, flexo printing techniques or ink or bubble jet printing processes.

Such surface finish effects are any of a wood grain, coloured areas or patterns or advertising material.

In a further aspect of the invention there is provided a method of coating an article comprising selecting a sheet of plastics material, printing at least one ink pattern on a surface thereof, applying an adhesive layer either before or after applying the ink pattern, to the rear surface of said plastics sheet and/or the surface of the article to be coated; moving the sheet to a position so that the coating pattern is in register with the article; applying the coating to the article by pressing the same onto the article to cause the same to adhere to the article.

In one embodiment heat is applied during the pressing process to soften the coating and adhesive and once the coating has been applied it is trimmed to remove any excess sheet material.

In an alternative embodiment the sheet material is cut to the required size prior to the application of the same to the article.

Typically the coating and the article are placed in a mould

which has the shape of the external surface of said article and the mould presses the coating into contact and ensures that the coating is in register with the article and adheres to all the required areas of the same. In one embodiment magnetic clamping means are used to hold the sheet and article in register or pin location means could be used or indeed any conventional article registration means. Preferably the article is raised to allow the sheet coating to be wrapped around the edges thereof to provide a complete coating effect.

In one preferred embodiment a sheet of plastics material has a plurality of sets of ink patterns applied thereto at different locations thereon and each set, which includes at least one ink pattern, defines a coating for an article so that said sheet has formed thereon a plurality of coatings for articles.

In this form the coatings can be separated prior to their application to their respective articles or, alternatively, the sheet can be placed such that each of the coatings is in register with their respective articles prior to the same being applied to the articles and following which the excess sheet material is trimmed from the articles.

Specific embodiments of the invention are now described with reference to the accompanying drawings wherein;

Figure 1 illustrates an article to which a coating of the invention can be applied;

Figure 2 illustrates an enlarged cross section of a coating in one embodiment of the invention;

Figure 3 illustrates the article of Figure 1 with the coating

of Figure 2 applied thereto;

Figure 4 illustrates a coating in a second embodiment;

Figure 5 illustrates an article coated by the coating of Figure 4; and

Figure 6 illustrates a schematic diagram of a coating method according to the invention.

The article to which a coating 2 is to be applied in the first embodiment as shown in Figure 1 is the external surface 4 of a cabinet door 6 which is manufactured from MDF. In this case the coating is to be applied to create a viewable pattern to give the effect that the door has been manufactured by the joining of pieces of wood having wood grains in different planes by traditional, more expensive, carpentry, and this is achieved by providing a viewable pattern which depicts a suitable and realistic wood grain effect. This would not be possible using existing coatings as only the production of a wood grain effect in a continuous single plane would be possible.

The door 6 is manufactured from MDF using standard manufacturing processes and is provided with an indented section 7 which adds to the visual effect of the door 6.

The coating 2 as shown in Figure 2 comprises a sheet of PVC plastics material 8 which is of a colour linked to the effect to be provided. In this case the sheet 8 is brown as a wood grain effect is to be produced. The sheet 8 has a front surface 10 on which the coating with the wood grain effect is to be produced and a rear surface 12 which is to be adhered to the door 4.

To the front surface 10 there is applied a first ink pattern 14 by a conventional screen, litho, flexo or inkjet printing technique, followed by a second ink pattern 16 again applied by a printing process. The patterns of the inks applied are such as to produce a viewable pattern which creates an external appearance of a wood grain and also the joins between wooden pieces are created as shown, for example, at 9 in Figure 3. The colour of the sheet provides the background colour of the wood. Additionally, an ink pattern 11 is applied to produce a shaded area which is located so that the same lies in the indented areas 7 of the door when applied to the same and provides a shaded effect. Thus it will be seen that the application of ink patterns in this way allows a pattern to be created which is not provided in a continuous form and can be used to create and enhance the effect of contours on the article to which the coating is to be applied.

When the ink patterns 14, 16, 11 have been applied, the front surface 10 is covered with a protective lacquer 17 and the same is dried to at least a tacky condition by Ultra Violet heating. The lacquer serves to protect the ink patterns and increase the durability and resistance to damage of the coated surface.

A layer of adhesive and/or primer 20 is applied to the rear surface 12 of the coating either before or after the application of the ink patterns and/or a layer 22 is applied to the door surface. The coating 2 is then brought to lie in register with the surface to be coated and then membrane pressed onto the external surface of the door. The door and the coating are pressed together and heat is applied to the same such that the PVC sheet softens and the adhesive membrane is activated. The coating and door are then pressed into a mould and the same ensures that the coating adheres

and contacts the surface of the door 6 in register and particularly the edges thereof to produce a coated door 6 as shown in Figure 3. The layer of adhesive can be any standard adhesive suited to the particular article to which the coating is to be applied. When the coating is to be applied to MDF furniture it is found that the adhesives sold under the trade name HELMIPUR 34331 and 34333 mixed with 5% hardener Helmitin D is effective.

Typically the adhesive layer can be applied by spray gun and can be applied to either or both of the components prior to the same being pressed together in a mould press. The bonding process used can be either of wet or dry bonding and heat is applied to activate the adhesive.

Typically the press used is a conventional membrane press which are commonly used for applying membranes such as coatings to articles of furniture.

Figure 4 illustrates a second embodiment of coating where the sheet material 24 used is transparent. The sheet material has an inner surface 26 which is to be applied to the article to be coated and an outer surface 28. At least one printed pattern 30 is applied to the inner surface 26 and the pattern formed is viewable when looking at the outer surface 28 as the plastics sheet material is transparent. In this embodiment a layer of varnish 32 is applied to the outer surface 28 although equally a further pattern could be printed thereon if required.

In this embodiment the transparent plastic sheet material allows the patterns applied thereto to be viewable through the same from the other side of the plastics sheet material. This also allows the printed patterns, as well as the article which is coated, to be protected from damage during

subsequent use.

Figure 5 illustrates an article, in this case a door 31, which has been coated with a plastics sheet material coating such as that shown in Figure 4 with ink patterns 30 printed thereon. In this embodiment the colour of the material from which the door has been manufactured is used as part of the viewable pattern as it is viewable through those parts of the coating where no patterns have been applied. The coating is of a material and of a thickness which allows the same, when applied to the door, to be pressed into the shape of any indents, grooves and protrusions, indicated by the general reference numeral 32, formed on the surface of the door, hence creating, in addition to the visual effect created by the printing of patterns, a tactile effect through the impression of the grooves and indents in the coating.

A specific method is illustrated in Figure 6 wherein there is first provided a sheet of plastics material 40. If, for example, four articles are required to be coated at one time with the material, then four sets of ink patterns are printed thereon to define four coatings 42, 44, 46, 48, (as opposed to one continuous pattern in conventional coating methods). These coatings are provided with the required dimensions to match the articles to be coated and ink patterns, generally referred to as 50, are applied in a manner to provide the required viewable pattern. The sheet of material 40 and/or the articles are sprayed with a layer of adhesive and the sheet is then moved to a position for attaching the coatings onto the respective articles 52, 54, 56,58. The coatings 42, 44, 46, 48, as part of the sheet 40, are placed in register with the respective articles 52, 54, 56, 58 using a conventional article registration jig or other suitable method, and then the coatings are pressed onto the articles and adhered thereto so that each coating and the patterns

thereon are placed in register with the article surface.

The coating according to the invention and method of preparing the same according to the invention allows articles to be coated using a process which is less complex than the known art and which allows a reduction in the coating material which is required to be used as the ink patterns can be printed on sheet material at specific locations and for specific articles as opposed to conventional coating methods which produce a continuous pattern on sheet material which is cut into a shape to provide a coating having a continuous pattern for an article. Furthermore, the range of surface effects which can be produced on the coating are substantially greater than with known coating in that the range of surface effects which can be applied by printing the same onto a plastics sheet of the required colour are extensive and can be adapted to suit specific requirements. The provision of the coatings to have viewable patterns thereon in registration with features on the article to which the coating is to be applied further enhances the visual effect created.

A further advantageous aspect of the invention is that the coatings are hard wearing and is resistant to damage by wear or impact of objects thereon. The provision of a protective layer of material over the ink pattern ensures that the same is not affected by impact or wear and the plastics sheet material is also protective of the material from which the article is manufactured. The coating can therefore be used for the protection of articles in addition to the other advantages obtained.

CLAIMS

1. A coating for application to a surface of an article, said coating comprising a sheet of plastics material and wherein there is applied to at least one face of the sheet, at least one ink pattern, said sheet applied in register with the article to adhere to a surface thereof to coat the same, with the pattern viewable.

2. A coating according to Claim 1 wherein a plurality of different ink patterns which differ in colour and/or configuration are applied to a face of the coating to form the viewable pattern.

3. A coating according to Claim 1 wherein a protective coating of transparent material is applied over the viewable pattern.

4. A coating according to Claim 1 wherein the plastics sheet material used has a thickness of between 200 - 500 microns.

5. A coating according to Claim 4 wherein the plastics material is either of PVC or styrene.

6. A coating according to Claim 1 wherein the coating is applied to the article in register therewith and the viewable pattern printed on the coating mimics and enhances the effect of contour changes on the surface of the article on the viewable pattern.

7. A coating according to Claim 1 wherein a further pattern of transparent material is applied to the coating to give the coating a tactile effect.

8. A coating according to Claim 1 wherein the plastics sheet

material is an opaque material of uniform colour.

9. A coating according to Claim 8 wherein the colour of the plastics sheet material forms part of the viewable pattern.

10. A coating according to Claim 1 wherein the plastics sheet material is substantially transparent.

11. A coating according to Claim 10 wherein ink patterns are applied to the outer and/or inner surfaces of the coating and the patterns applied to the inner surface are viewable through the sheet material when the coating is applied to the article.

12. A coating according to Claim 10 wherein the colour of the article to be coated is an integral part of the viewable pattern.

13. An article comprising a base having at least one contoured surface onto which is applied a coating of plastics sheet material, said sheet material including a pattern printed thereon and wherein the coating is applied to the surface in register therewith such that the pattern is viewable and enhances the appearance of the surface.

14. An article according to claim 13 wherein the article is an item, or component of, a piece of furniture.

15. A method for forming a coating for the surface of an article comprising selecting a sheet of plastics material and applying to a face of said sheet at least one ink pattern by printing to define a coating and adhering the said coating to the article so that the pattern is viewable.

16. A method according to Claim 15 wherein an ink of a first

colour is applied to the sheet material in a first pattern followed by the application of an ink in a second pattern and successive patterns are applied thereafter to produce the viewable pattern.

17. A method according to Claim 15 wherein the ink patterns are applied by any of screen, litho or flexo printing techniques or ink or bubble jet printing processes.

18. A method of coating an article comprising selecting a sheet of plastics material, printing at least one ink pattern on the surface thereof, applying an adhesive layer, either before or after the ink pattern, to the rear surface of said plastics sheet and/or the surface of the article to be coated; moving the sheet to a position so that the coating pattern is in register with the article, applying the coating to the article by pressing the same onto the article to cause the same to adhere to the article in register therewith. material.

19. A method of coating an article according to Claim 18 wherein the coating is cut to the required size prior to the application of same to the article.

20. A method of coating an article according to Claim 18 wherein the printed sheet material and article are placed in a mould said mould membrane pressing the sheet material onto the article and registration means are used to maintain the sheet material in register with the article.

21. A method according to claim 18 wherein a sheet of plastics material has a plurality of sets of ink patterns applied thereto at different locations thereon and each set, which comprises at least one ink pattern, defines a coating for an article so that said sheet has formed thereon a

plurality of coatings for articles.

22. A method according to claim 21 wherein the coatings defined are separated prior to their application to their respective articles.

23. A method according to claim 21 wherein the sheet is placed such that each of the coatings is in register with their respective articles prior to the same being applied to the articles and following which the coatings are separated.

24. A coating as hereinbefore described with reference to the accompanying drawings.

25. An article having a coating applied thereto as hereinbefore described with reference to the accompanying drawings.

26. A method for coating an article has hereinbefore described with reference to the accompanying drawings.

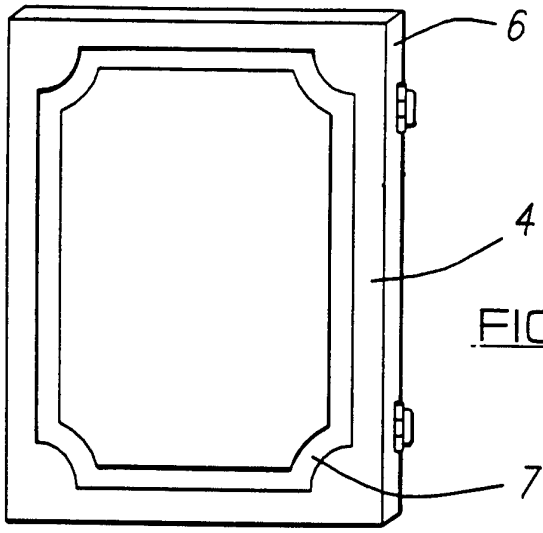

FIG.1

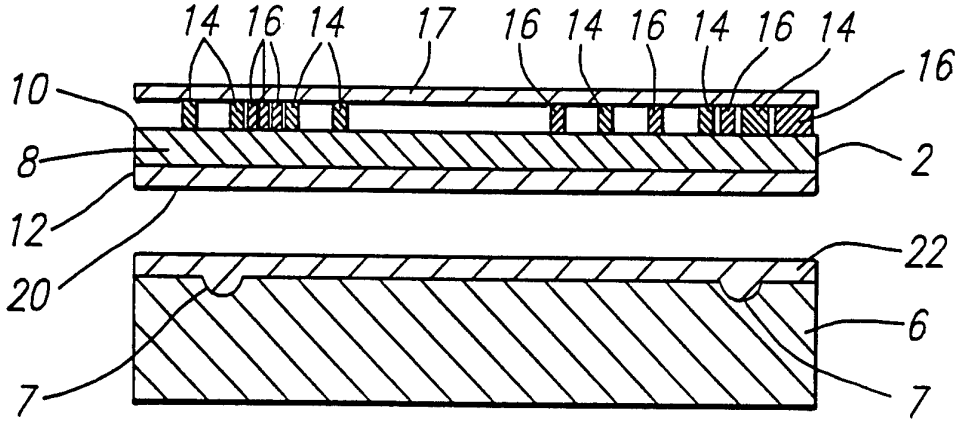

FIG.2

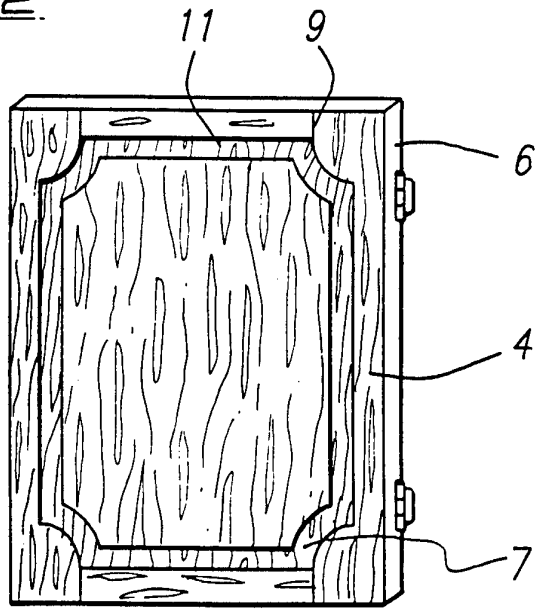

FIG.3

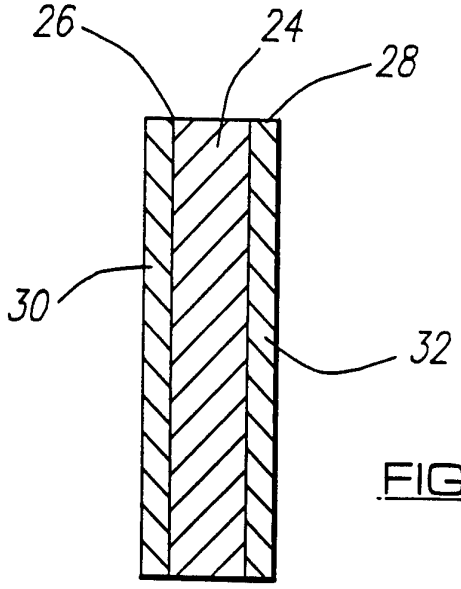

FIG.4

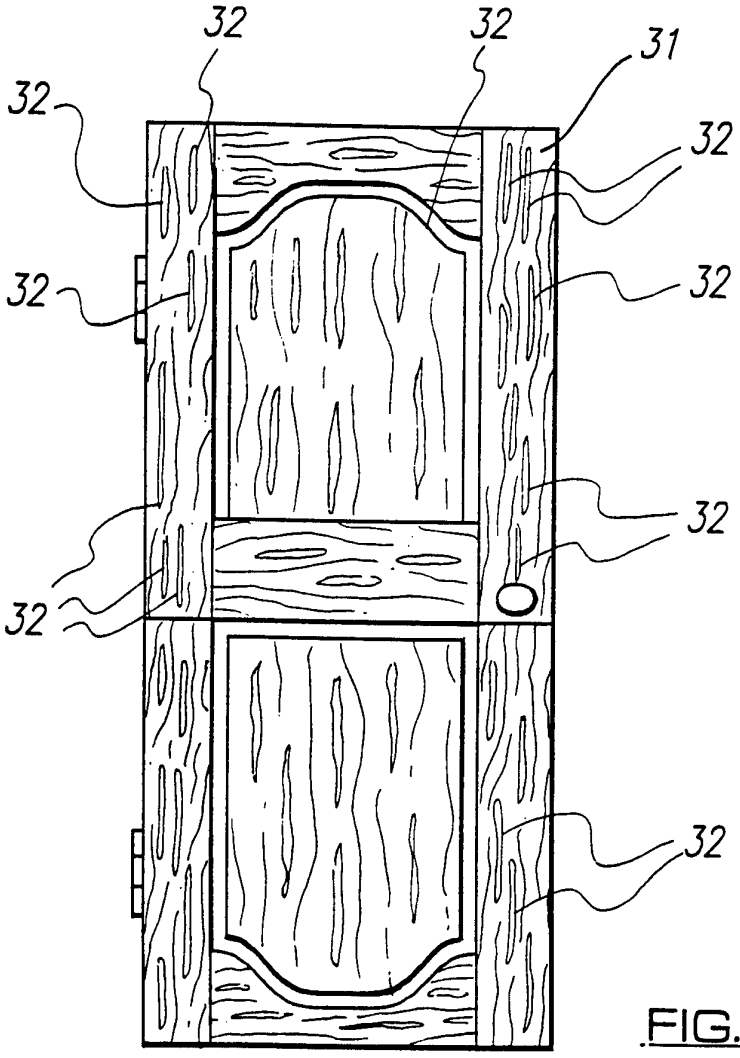

FIG.5

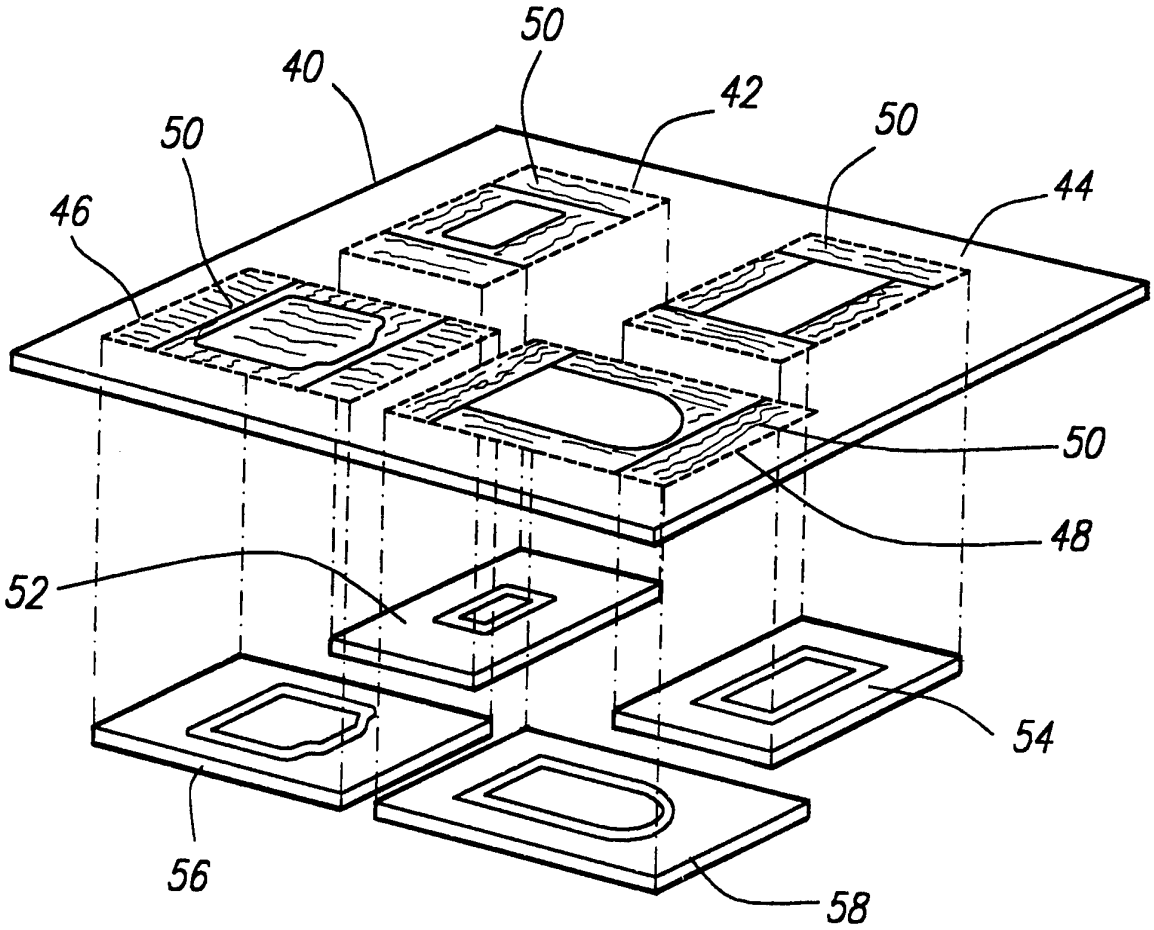

FIG.6

INTERNATIONAL SEARCH REPORT

Inte onal Application No
PCT/GB 95/01114

A. CLASSIFICATION OF SUBJECT MATTER
IPC 6 B44C5/04 B44C1/18 B44C1/20

According to International Patent Classification (IPC) or to both national classification and IPC

B. FIELDS SEARCHED

Minimum documentation searched (classification system followed by classification symbols)
IPC 6 B44C

Documentation searched other than minimum documentation to the extent that such documents are included in the fields searched

Electronic data base consulted during the international search (name of data base and, where practical, search terms used)

C. DOCUMENTS CONSIDERED TO BE RELEVANT

Category *	Citation of document, with indication, where appropriate, of the relevant passages	Relevant to claim No.
X	US-A-5 019 440 (YASUKICHI OGASAWARA ET AL) 28 May 1991 see column 2, line 30 - column 5, line 56; examples 1-3 ---	1,3,10, 13-15,17
X	US-A-4 293 603 (D. R. HAYMAN-CHAFFEY ET AL) 6 October 1981 see column 3, line 10 - column 7, line 6 ---	1-3,5, 10,11, 13-18,21
X	US-A-4 643 789 (H. A. PARKER ET AL) 17 February 1987 see column 3, line 28 - column 11, line 33 ---	1,2,5, 13, 15-21,23
X	US-A-4 350 550 (D. T. VAN MANEN) 21 September 1982 see the whole document ---	1-3,7-9, 13-17
	-/--	

[X] Further documents are listed in the continuation of box C.

[X] Patent family members are listed in annex.

* Special categories of cited documents :

"A" document defining the general state of the art which is not considered to be of particular relevance

"E" earlier document but published on or after the international filing date

"L" document which may throw doubts on priority claim(s) or which is cited to establish the publication date of another citation or other special reason (as specified)

"O" document referring to an oral disclosure, use, exhibition or other means

"P" document published prior to the international filing date but later than the priority date claimed

"T" later document published after the international filing date or priority date and not in conflict with the application but cited to understand the principle or theory underlying the invention

"X" document of particular relevance; the claimed invention cannot be considered novel or cannot be considered to involve an inventive step when the document is taken alone

"Y" document of particular relevance; the claimed invention cannot be considered to involve an inventive step when the document is combined with one or more other such documents, such combination being obvious to a person skilled in the art.

"&" document member of the same patent family

Date of the actual completion of the international search	Date of mailing of the international search report
7 September 1995	14.09.95

Name and mailing address of the ISA	Authorized officer
European Patent Office, P.B. 5818 Patentlaan 2 NL - 2280 HV Rijswijk Tel. (+31-70) 340-2040, Tx. 31 651 epo nl, Fax (+31-70) 340-3016	Doolan, G

Form PCT/ISA/210 (second sheet) (July 1992)

INTERNATIONAL SEARCH REPORT

Inte onal Application No
PCT/GB 95/01114

C.(Continuation) DOCUMENTS CONSIDERED TO BE RELEVANT

Category °	Citation of document, with indication, where appropriate, of the relevant passages	Relevant to claim No.
X	US-A-5 227 222 (YASUAKI OGAWA ET AL) 13 July 1993 see column 2, line 15 - column 4, line 55	1,2,4, 10,11, 13-18,20
X	GB-A-1 342 268 (GEORGE STRACHAN & SONS LIMITED) 3 January 1974 see page 1, line 9 - page 2, line 30	1,5,8,9, 13-15, 17-19

Form PCT/ISA/210 (continuation of second sheet) (July 1992)

INTERNATIONAL SEARCH REPORT

information on patent family members

Inte onal Application No
PCT/GB 95/01114

Patent document cited in search report	Publication date	Patent family member(s)		Publication date
US-A-5019440	28-05-91	US-E-	RE34743	27-09-94
		DE-A-	3838930	01-06-89
US-A-4293603	06-10-81	NONE		
US-A-4643789	17-02-87	EP-A-	0264498	27-04-88
		EP-A-	0258501	09-03-88
		US-A-	4650533	17-03-87
US-A-4350550	21-09-82	CA-A-	1165639	17-04-84
US-A-5227222	13-07-93	NONE		
GB-A-1342268	03-01-74	NONE		