Dec. 3, 1929. H. FLETCHER 1,738,289

TACTILE RECEPTION OF SOUND

Filed May 19, 1926

Fig. 1

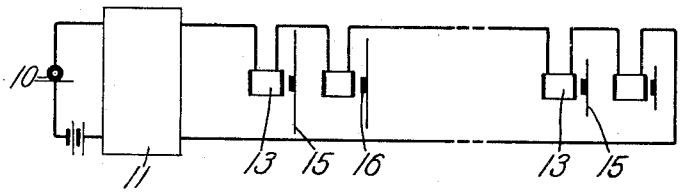

Fig. 2

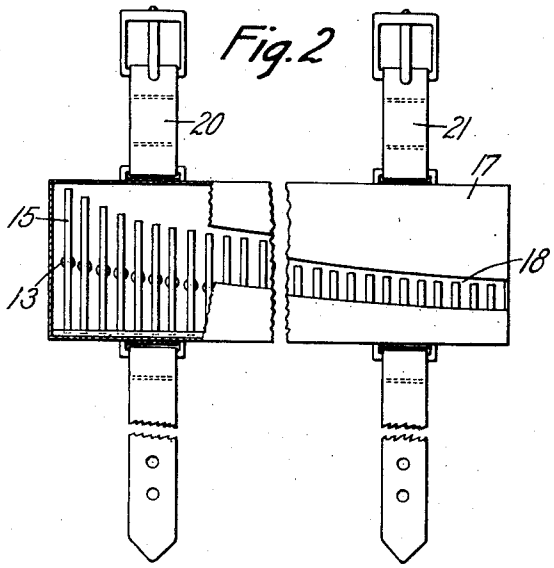

Fig. 3

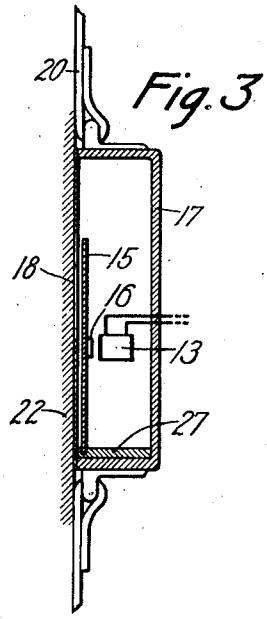

Fig. 4

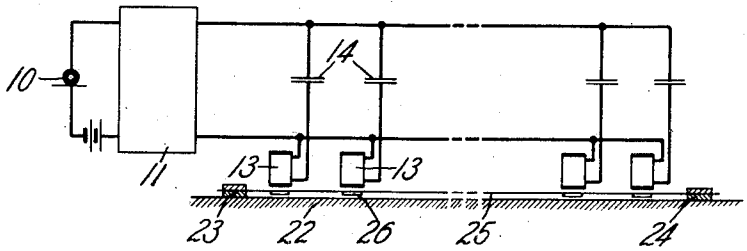

Inventor:
Harvey Fletcher
by J. S. Roberts Atty.

Patented Dec. 3, 1929 1,738,289

UNITED STATES PATENT OFFICE

HARVEY FLETCHER, OF NEW YORK, N. Y., ASSIGNOR TO WESTERN ELECTRIC COMPANY, INCORPORATED, OF NEW YORK, N. Y.

TACTILE RECEPTION OF SOUND

Application filed May 19, 1926. Serial No. 110,099.

This invention relates to sound wave reception and more particularly to means for perceiving sound through the sense of touch.

An object of the invention is to enable a totally deaf person to interpret sounds.

A related object is to make possible or to facilitate teaching persons who are deaf and dumb to speak.

In the past, experiments have been carried on, in which it was attempted to communicate with the deaf by employing what is essentially a telephone system to translate sound energy into mechanical vibrations, which are used to stimulate the tactile nerves of the skin. The vibrating means employed in these experiments was a device similar to a telephone receiver in which the diaphragm vibrates essentially as a unit at a rate corresponding to the frequency of the sound impressed upon the transmitter. This receiving device, vibrating at various voice frequencies, stimulated the nerves of substantially a single nerve area of the skin. These experiments proved fairly successful in view of the difficulty of the task.

According to one of the theories of the sensation of hearing, each sound frequency reaching the ear causes the whole basilar membrane to vibrate, but there is a particular spot on the basilar membrane where the amplitude of vibration is greatest. Thus the pitch of pure tones is determined by the position of maximum response on the basilar membrane, the high tones stimulating regions near the base and the low tones regions near the apex of the cochlea.

To accomplish the objects of the present invention means are provided to convert sound energy into mechanical vibrations which are employed to spacially stimulate the tactile nerves in accordance with the frequencies present in the sound energy. The present invention functions similarly to the ear in that different frequency components of a sound wave cause the stimulation of different nerve areas of the skin.

In accordance with one embodiment of the invention, a device such as a microphone is provided to generate electrical energy similar in frequency characteristics to the sound energy impressed upon it. This energy is then amplified and transmitted through the windings of one or more electromagnets which are employed to operate reeds which are resonant at different frequencies respectively. The structure of which the reeds are a part may be fastened to a part of the body where the tactile nerves are sensitive. The various reeds are caused to vibrate in accordance with the sound vibrations picked up by the microphone and these vibrations produce a spacial stimulation of the tactile nerves in a manner similar to that in which the nerves of the basilar membrane of the inner ear are stimulated to produce the sense of hearing.

Instead of employing resonant reeds, a single diaphragm may be used which may be caused to vibrate in different portions by the action of a plurality of electromagnets each of which is connected in a circuit of distinctive electrical resonance. The resonant circuits may also be employed in conjunction with the reeds as described above, in which case the circuit may be resonant at the same frequency as that at which the corresponding vibrating reed is resonant, thus bringing about sharper resonance at the operating frequency, or each electrical circuit may be made resonant at a frequency slightly different from that of the associated vibrating reed so that the operating range of each reed will be relatively broad compared to the range in a system having a common resonance point for both electrical circuit and reed. It may be possible in this way to reduce the number of reeds required to cover the frequency range and thus reduce the cost and size of the apparatus. For the best operation, however, it is desirable to employ a relatively large number of reeds, each responsive to only a small group of frequencies.

The invention may be more clearly understood by reference to the accompanying drawing, in which Fig. 1 is a schematic showing of the circuit arrangement embodying one form of the invention; Fig. 2 is the front view of a structure in which the vibrating means consists of a plurality of reeds; Fig. 3 is a sectional view of this structure po-

sitioned against a portion of the skin of the body; and Fig. 4 is a schematic view of another embodiment of the invention, in which a number of electromagnets are used to actuate different portions of a compound diaphragm.

In the drawing the microphone 10 is employed to pick up the sound vibrations which are thereby translated into electrical energy of similar frequency characteristics and amplified by an amplifier 11, preferably of the vacuum tube type. The amplified currents are then passed through the windings of the electromagnets 13. These windings may all be connected in series as shown in Fig. 1 or each winding may be connected in series with a condenser to form a plurality of parallel resonant circuits connected across the line as shown in Fig. 4. The parallel circuits, which may be used in conjunction with a structure employing either a plurality of vibrating reeds or a compound diaphragm, are each tuned to be resonant at a different frequency by employing condensers 14 of suitable capacity. While the circuits may be sharply resonant so as to function over a relatively small frequency range it seems desirable to have the circuit somewhat damped so as to broaden the frequency range at which each relay is responsive. In Fig. 1 the electromagnets are shown in conjunction with the vibrating reeds 15 which may either be of magnetic material or of non-magnetic material having a piece of magnetic material 16 attached thereto. These reeds are each mechanically resonant at a particular frequency. While it is preferable to employ a separate electromagnet to actuate each reed, the same electromagnet may be used to operate all of the reeds. Reeds may be used which are resonant at uniformly spaced frequency intervals over the range employed in speech and music or the spacing may be at smaller intervals at the frequency range of greater relative importance or occurrence. Figs. 2 and 3 show the reeds assembled in a box 17 in which there is an opening 18 through which the reeds extend when vibrating and thus impinge upon the skin of that portion of the body to which the device is attached. The straps 20 and 21 or other suitable means are provided for securing the device to the body. One end of each reed is firmly secured to the supporting member 27.

In Fig. 4 is shown another embodiment of the invention in which a diaphragm 25 is employed as the vibrating member in place of the reeds as described above. This diaphragm is spaced at a suitable distance from the skin 22 by means of the supports 23 and 24. It is preferable in this device to employ pieces of magnetic material 26 attached to the diaphragm at suitable intervals. These discs of magnetic material may be attached to that side of the diaphragm adjacent to the skin so that when the diaphragm vibrates, these discs will impinge upon the skin. The parallel circuits, consisting of electromagnets 13 and condensers 14, are each resonant at a particular frequency and are connected to the output of the amplifier 11 to which energy is supplied by the microphone 10. The electromagnets 13 are suitably spaced along the diaphragm 25 each electromagnet being placed in alignment with one of the discs 26.

In operation the sound energy is picked up by the microphone which generates electrical energy of similar frequency characteristic. The electrical energy is amplified by the amplifier 11 and then passed through the windings of the electromagnets 13. The electromagnets may be placed in circuits which are resonant at particular frequencies but when the vibrating reeds 15 are employed, the electromagnets need not necessarily be placed in resonant circuits since the reeds in themselves are resonant. When a single frequency tone or a sound composed of a narrow band of frequencies is impressed upon the microphone 10, a single reed or a small portion of the compound diaphragm is caused to vibrate at the frequency of the impressed tone and at an amplitude which bears a definite relation to the intensity of the impressed tone at the microphone. When a complex tone is transmitted to the electromagnets 13, several reeds or several parts of the compound diaphragm are caused to vibrate in accordance with the frequencies of which the complex tone is composed. When the device is placed against the skin of some part of the body, for any sound picked up by the transmitter, there will be a corresponding spacial stimulation of the tactile nerves due to the reeds or the metallic discs attached to the diaphragm impinging upon the skin.

The device is useful not only to communicate sound energy to deaf people through their sense of touch but may also be of use in teaching people who are deaf and dumb to speak. People who have been deaf from time of birth or early childhood are often unable to speak because sounds have never been communicated to them, and, although their organs of speech are normal physically, they are unable to reproduce what they have never perceived. By employing the present invention, the sound energy is perceived by the deaf and dumb person through his sense of touch and he can learn to speak by comparing the feeling produced by his own voice with that produced by the voice of his teacher and making corrections until the two voices produce the same feeling and therefore sound alike. This is relatively easily accomplished in view of the fact that people who have lost their sense of hearing usually possess a keener developed sense of touch.

What is claimed is:

1. The method of perceiving and distin-

guishing sound waves which comprises utilizing sound waves to control the spacial stimulation of the tactile nerves.

2. The method of perceiving and distinguishing sound waves which comprises vibrating a plurality of areas of the skin at different rates respectively, corresponding to component frequencies of the received sound.

3. The method of making sounds distinguishable through tactile sensation which comprises generating waves of frequencies corresponding to component frequencies of the received sound, filtering out bands of component frequencies and differentially stimulating separate areas of the skin of the observer in response to said frequency bands.

4. The method of making sounds distinguishable through tactile sensation which comprises receiving the sound energy, amplifying it, and differentially stimulating separate areas of the skin of the observer by said amplified energy in accordance with the component frequencies of the received sound.

5. A tactile sound receiver comprising means for receiving sound, a plurality of vibratable members, means controlled by the received sound for causing said vibratable members to vibrate selectively in accordance with frequency components of the received sound, and means for holding said vibratable members in such relation to the skin of an observer that the tactile nerves will be stimulated by them when vibrations occur.

6. A tactile sound receiver comprising a wave responsive device adapted to be positioned in operative relation to the skin of the observer and including vibratable means respectively responsive to different frequency waves for spacially stimulating the tactile nerves in accordance with the component frequencies of the received sound.

7. A tactile sound receiver comprising a wave responsive device adapted to be positioned in operative relation to the skin of the observer and including means for spacially stimulating the tactile nerves of adjacent areas of the skin.

8. A tactile sound receiver comprising a wave responsive device means for positioning said device in operative relation to the skin of the observer, said device including vibratable means, different portions of which are resonantly responsive to different frequencies respectively and are so arranged as to spacially stimulate the tactile nerves of adjacent areas of the skin in response to the frequency components of the received sound.

9. A tactile sound receiver comprising a wave responsive device adapted to be positioned in operative relation to the skin of the observer, said device including vibratable means comprising a plurality of reeds resonant at different frequencies respectively, for spacially stimulating the tactile nerves of adjacent areas of the skin.

10. A tactile sound receiver comprising a wave responsive device means for positioning said device in operative relation to the skin of the observer, said device including vibratable means, associated with tuned electrical circuits, and so positioned as to stimulate the tactile nerves of adjacent areas of the skin in response to frequency components of the received wave.

11. In a communication system, a line, means for impressing on said line signals of the audible frequency range, a wave responsive device connected to said line, said device comprising a vibratable means and means to set into vibration particular portions of said vibratable means in accordance with the frequency components of said impressed signals, means for positioning said vibratable means in operative relation to the skin of the observer whereby vibrations of different frequencies transmitted over the line are made distinguishable to the observer through the sense of touch.

12. In a communication system, a line, means for impressing on said line signals of the audible frequency range, a wave responsive device connected to said line consisting of a vibratable means and a plurality of electromagnets, each of said electromagnets being adapted to set into vibration a particular portion of said vibratable means in accordance with the frequency of the signal currents impressed on said line and means for positioning said vibratable means in operative relation to the skin of the observer whereby signals of different frequencies are made distinguishable to the observer through the sense of touch.

13. In a communication system, a line, means for impressing on said line signals of the audible frequency range, a wave responsive device connected to said line, said device including a plurality of vibratable reeds, each reed being responsive to a group of frequencies, and means to actuate said reeds in accordance with the frequency of the signal currents impressed upon said line, said vibratable reeds being adapted to communicate their vibrations to the observer through the sense of touch.

14. In a communication system, a line, means for impressing on said line signals of the audible frequency range, a wave responsive device connected to said line, said device including a plurality of vibratable reeds, each reed being responsive to a group of frequencies, and a plurality of electromagnets, one for each reed, for setting said reeds into vibration in accordance with the frequency of the signal currents impressed upon said line, said vibratable reeds being adapted to communicate their vibrations to the observer through the sense of touch.

15. In a communication system, a line, means for impressing on the line signals of

the audible frequency range, a plurality of parallel circuits connected to said line, each circuit being resonant to currents of a particular frequency, vibratable means, means forming a part of each of said parallel circuits and adapted to actuate different portions of said vibratable means in accordance with the frequency of the signal currents impressed upon said line, means for positioning said vibratable means in operative relation to the skin of the observer whereby said vibrations of different frequencies may be detected by the observer through the sense of touch.

16. In a communication system, a line, means for impressing on said line signals of the audible frequency range, a plurality of parallel electrical circuits connected across said line, said circuits being resonant to currents of different frequency respectively, a plurality of vibratable reeds, each responsive to a group of frequencies, an electromagnet forming a part of each of said parallel circuits and adapted to actuate one of said vibratable reeds, said vibratable reeds being adapted to communicate their vibrations to different nerve areas respectively of the skin of the observer in accordance with and dependent upon the frequency of the components of the signal current impressed on said line.

17. An electrical receiving device comprising a plurality of electromagnets responsive respectively to currents of different frequencies, a vibratable means, having certain portions under the control of certain of said electromagnets, a structure containing said vibratable means adapted to be secured to a part of the human body to permit particular portions of said vibratable means to lightly impinge on a particular portion of the skin.

In witness whereof, I hereunto subscribe my name this 7th day of May A. D., 1926.

HARVEY FLETCHER.