PCT WORLD INTELLECTUAL PROPERTY ORGANIZATION
International Bureau

INTERNATIONAL APPLICATION PUBLISHED UNDER THE PATENT COOPERATION TREATY (PCT)

(51) International Patent Classification 6 : G02B 27/22	A1	(11) International Publication Number: WO 95/16935
		(43) International Publication Date: 22 June 1995 (22.06.95)

(21) International Application Number: PCT/GB94/02611

(22) International Filing Date: 29 November 1994 (29.11.94)

(30) Priority Data:
9325433.2 13 December 1993 (13.12.93) GB

(71) Applicant *(for all designated States except US)*: CENTRAL RESEARCH LABORATORIES LIMITED [GB/GB]; Dawley Road, Hayes, Middlesex UB3 1HH (GB).

(72) Inventors; and
(75) Inventors/Applicants *(for US only)*: SHANKS, Ian [GB/GB]; Central Research Laboratories, Dawley Road, Hayes, Middlesex UB3 1HH (GB). DOBRUSSKIN, Christoph [GB/GB]; Central Research Laboratories, Dawley Road, Hayes, Middlesex UB3 1HH (GB).

(74) Agent: MARSH, Robin, Geoffrey; Thorn Emi Patents Limited, Central Research Laboratories, Dawley Road, Hayes, Middlesex UB3 1HH (GB).

(81) Designated States: JP, KR, US, European patent (AT, BE, CH, DE, DK, ES, FR, GB, GR, IE, IT, LU, MC, NL, PT, SE).

Published
With international search report.
Before the expiration of the time limit for amending the claims and to be republished in the event of the receipt of amendments.

(54) Title: APPARATUS FOR DISPLAYING AN IMAGE

(57) Abstract

Apparatus for displaying an image suspended in space above a horizontal surface such as a tabletop or vehicle dashboard, of an original image below the surface, comprises a beamsplitter window in the surface and a retroreflector below the surface in a path for light reflected by the beamsplitter. The original image may for example be a VDU screen or vehicle instrument panel.

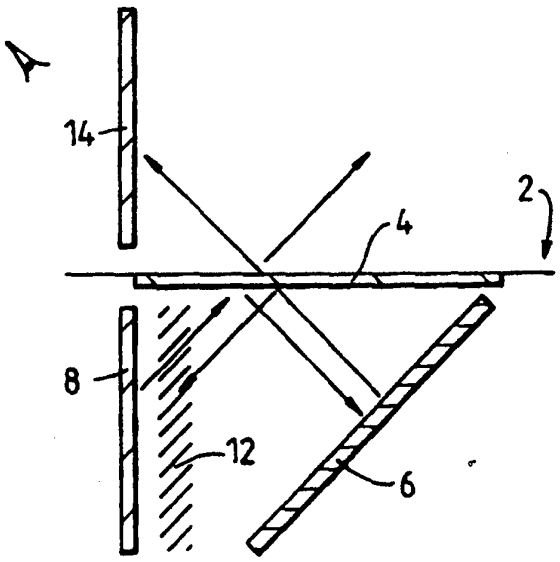

FOR THE PURPOSES OF INFORMATION ONLY

Codes used to identify States party to the PCT on the front pages of pamphlets publishing international applications under the PCT.

AT	Austria	**GB**	United Kingdom	**MR**	Mauritania
AU	Australia	**GE**	Georgia	**MW**	Malawi
BB	Barbados	**GN**	Guinea	**NE**	Niger
BE	Belgium	**GR**	Greece	**NL**	Netherlands
BF	Burkina Faso	**HU**	Hungary	**NO**	Norway
BG	Bulgaria	**IE**	Ireland	**NZ**	New Zealand
BJ	Benin	**IT**	Italy	**PL**	Poland
BR	Brazil	**JP**	Japan	**PT**	Portugal
BY	Belarus	**KE**	Kenya	**RO**	Romania
CA	Canada	**KG**	Kyrgystan	**RU**	Russian Federation
CF	Central African Republic	**KP**	Democratic People's Republic of Korea	**SD**	Sudan
CG	Congo			**SE**	Sweden
CH	Switzerland	**KR**	Republic of Korea	**SI**	Slovenia
CI	Côte d'Ivoire	**KZ**	Kazakhstan	**SK**	Slovakia
CM	Cameroon	**LI**	Liechtenstein	**SN**	Senegal
CN	China	**LK**	Sri Lanka	**TD**	Chad
CS	Czechoslovakia	**LU**	Luxembourg	**TG**	Togo
CZ	Czech Republic	**LV**	Latvia	**TJ**	Tajikistan
DE	Germany	**MC**	Monaco	**TT**	Trinidad and Tobago
DK	Denmark	**MD**	Republic of Moldova	**UA**	Ukraine
ES	Spain	**MG**	Madagascar	**US**	United States of America
FI	Finland	**ML**	Mali	**UZ**	Uzbekistan
FR	France	**MN**	Mongolia	**VN**	Viet Nam
GA	Gabon				

APPARATUS FOR DISPLAYING AN IMAGE

This invention relates to apparatus for displaying an image of an object, comprising a beamsplitter positioned in a path for light from the object, and retroreflector means positioned in a path for light from the object which has been transmitted or reflected by the beamsplitter.

Our copending application, EP0460873, discloses an apparatus comprising an array of retroreflectors, and a beamsplitter arranged to direct light from an object on one side of the beamsplitter towards the array of retroreflectors, and to direct light reflected from the array to form the image on the other side of the beamsplitter. The image may be suspended in space and appears to be three dimensional.

According to the present invention, there is provided an apparatus as defined in the first paragraph, characterised in that the beamsplitter is mounted in an aperture in an opaque surface.

This apparatus may be used, for example, for displaying an image of a VDU above a tabletop, or for displaying an image of a dashboard display of a vehicle.

In order that the present invention may be more readily understood, reference will now be made, by way of example, to the accompanying drawings, in which:

Figure 1 is a perspective view of an apparatus according to the invention;

Figure 2 is a cross-sectional side view of the apparatus of Figure 1;

Figures 3, 4 and 5 are cross-sectional side views of alternative apparatuses according to the invention.

Referring to Figures 1 and 2, an opaque surface 2 such as a tabletop, shown broken away, includes a beamsplitter window 4 mounted in an aperture therein. In this embodiment, retroreflector means comprising an array of retroreflectors, such as a sheet 6 of corner-cubes, is positioned in a path for light which has been reflected by the beamsplitter 4. In this

example it is positioned at an acute angle thereto, which is about 45°, so as to form the second side of a triangle therewith. An object 8 such as a picture displayed on a VDU screen is positioned along the third side of the triangle, in this example at about 90° to the beamsplitter. Alternatively, the screen may be positioned parallel to the beamsplitter, or at any other orientation where light from the object reaches the beamsplitter. Other objects such as three-dimensional objects may also be displayed by the apparatus by placing them in an equivalent position.

In a preferred embodiment, means for screening the retroreflector 6 from the object is provided, such as a louvre film 12 in front of the object 8. As indicated by arrows in figure 2, the beamsplitter 4 reflects light from the object 8 towards the retroreflector 6. In addition some of the light is transmitted by the beamsplitter 4 and is 'lost'. The beamsplitter 4 also transmits light reflected from the retroreflector 6 to form the suspended image 14 opposing the object 8 with respect to the beamsplitter 4. In addition, some of the light is reflected by the beamsplitter back towards the original image 8.

In the embodiment shown in Figure 3, a further array of retroreflectors 16 is positioned in a path for light which has been transmitted by the beamsplitter. In this example, the further array opposes the retroreflector 6 with respect to the beamsplitter 4; that is, it forms a triangular arrangement with the beamsplitter 4 and the suspended image 14. The further array of retroreflectors 16 directs light which is transmitted by the beamsplitter 4 directly from the original image 8 back towards the beamsplitter 4 to prevent 'loss' of this light. In an alternative embodiment of the invention, the array of retroreflectors 6 in a path for light which is reflected by the beamsplitter 4 could be omitted.

In the embodiment of Figure 3, the object 8 is a projection screen, and an image is formed thereon by a projector 18. The projector 18 is shown positioned in the gap 10 between the retroreflector array 6 and the object 8, but

may have other positions. For example it may be positioned in an aperture in the retroreflector array 6.

As indicated by plus and minus signs adjacent arrows in the Figure, the beamsplitter may be polarisation selective, transmitting light having one type of circular polarisation and reflecting light having the other type. For example, it may comprise layers of cholesteric liquid crystal polymers reflecting different spectral regions of circularly polarised light of one sense so as to reflect white light (i.e. the whole visible spectrum) of this sense.

Additionally, the object may be arranged to emit circularly polarised light, in which case one of the arrays 6, 16 may be omitted, since all of the light from the object could be of the type which is either reflected or is transmitted by the selective beamsplitter. This could be achieved by using a transmissive or reflective projection screen which either preserves or reverses polarisation, and a projector which produces linearly polarised light, such as an LCD projector, combined with a quarter wave plate. A transmissive such screen is disclosed in GB 1509180.

In the embodiment shown in Figure 4, the retroreflector means comprises a pair of opposed retroreflector arrays 6 on opposite sides of the object 8, here shown as a VDU screen which is substantially parallel to the beamsplitter 4. The suspended image 14 may now be viewed from opposite directions as indicated by the arrows in the Figure. Modifications of this embodiment might include a curved array of retroreflectors having a frustoconical shape providing an image viewable all around. Alternatively such an array could have a plurality of facets allowing viewing from a plurality of predetermined directions.

In a similar manner to the embodiment of Figure 3, further retroreflectors could be positioned in a path for light transmitted by the beamsplitter; that is on the same side of the beamsplitter as the suspended image 14, to prevent loss of some light.

If it is required that the object 8 be directly viewable through the beamsplitter 4, the beamsplitter may have an opaque area (not shown) directly above the object 8. Alternatively, the beamsplitter 4 could be polarization selective, and the object 8 could be arranged to emit circularly polarised light, as indicated by plus and minus signs adjacent the arrows in the Figure.

The embodiment of Figure 5 is similar to that of Figure 4, but uses a single retroreflector 6 which is parallel to the beamsplitter 4 and which is half-transparent so as to allow light from the object 8 to pass therethrough. In an alternative embodiment, there could be an aperture in the retroreflector 6 directly above the object 8 so that the retroreflector 6 need not be half-silvered.

CLAIMS

1. Apparatus for displaying an image of an object, comprising a beamsplitter positioned in a path for light from the object, and retroreflector means positioned in a path for light from the object which has been transmitted or reflected by the beamsplitter, characterised in that the beamsplitter is mounted in an aperture in an opaque surface.

2. Apparatus for displaying an image of an object, comprising a beamsplitter positioned in a path for light from the object, and retroreflector means positioned in a path for light from the object which has been transmitted or reflected by the beamsplitter, characterised in that parts of the retroreflector means lie on opposite sides of any plane which is perpendicular to the beamsplitter and which intersects a given part of the object, the retroreflector means not lying between the object and the beamsplitter.

3. Apparatus as claimed in claim 1, wherein the object and the beamsplitter are substantially flat and the object is positioned at 90° to the beamsplitter.

4. Apparatus as claimed in claim 1, comprising means for screening the retroreflector means from the object.

5. Apparatus as claimed in claim 1, comprising retroreflector means positioned in a path for light from the object which has been transmitted by the beamsplitter and in a path for light from the object which has been reflected by the beamsplitter.

6. Apparatus as claimed in claim 1 or claim 2, wherein the beamsplitter is polarisation selective.

7. Apparatus as claimed in claim 6, wherein light from the object which reaches the beamsplitter is polarised.

8. Apparatus as claimed in claim 1, wherein parts of the retroreflector means lie on opposite sides of any plane which is perpendicular to the beamsplitter and which intersects a given part of the object.

Fig.1.

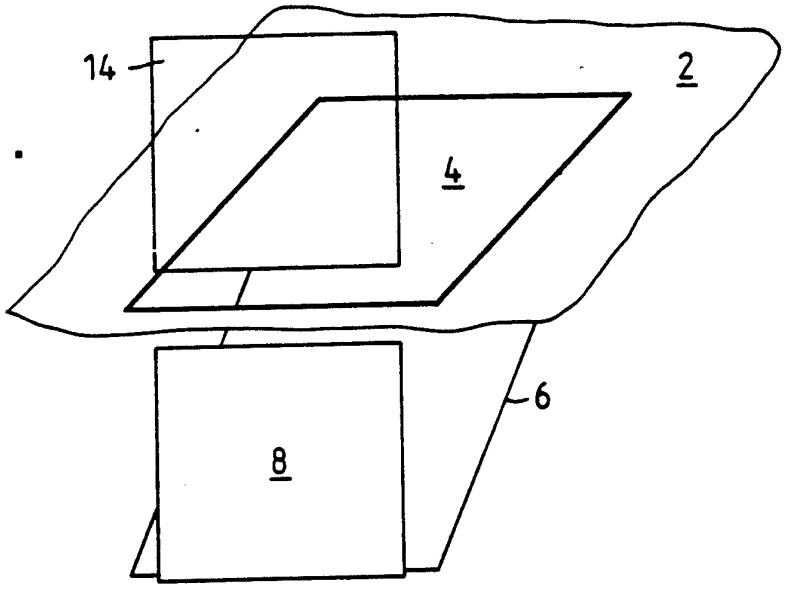

Fig.2.

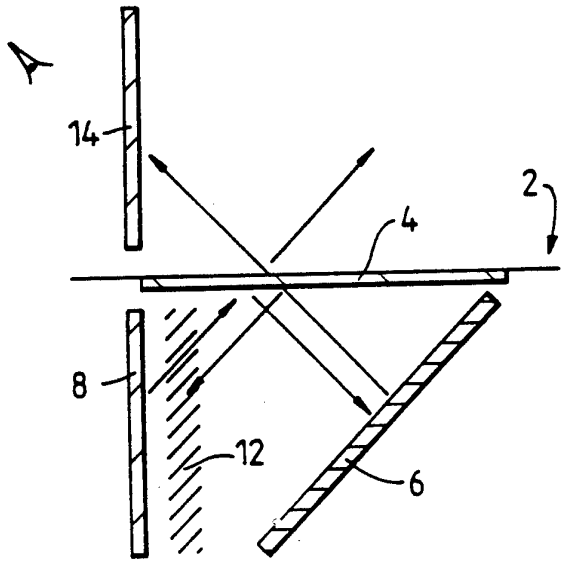

Fig.3.

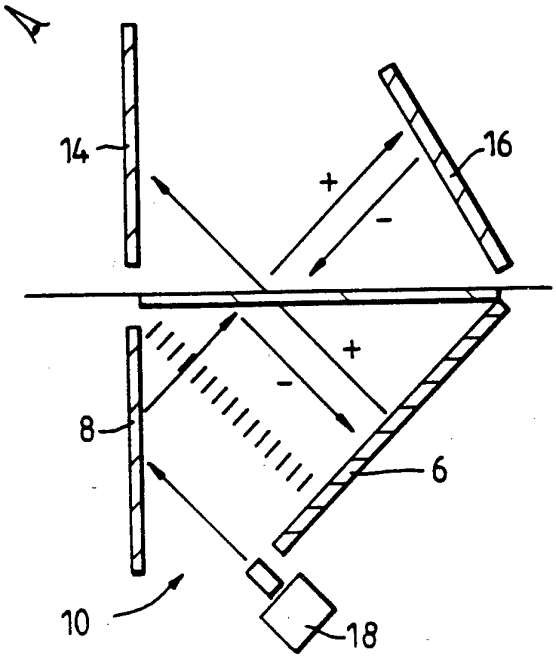

Fig.4.

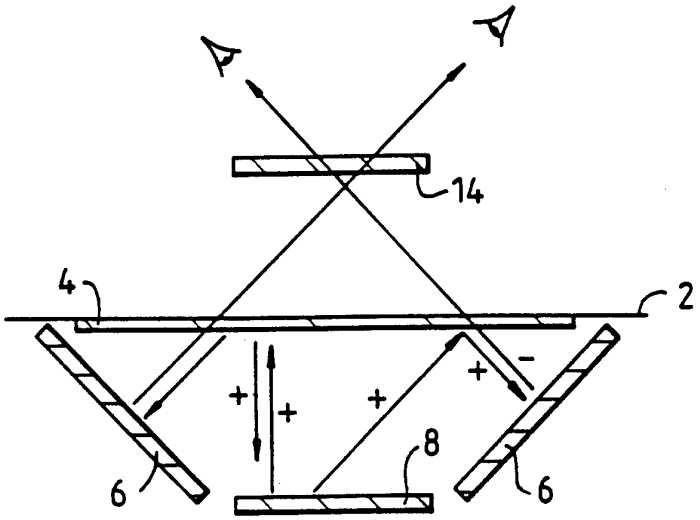

Fig.5.

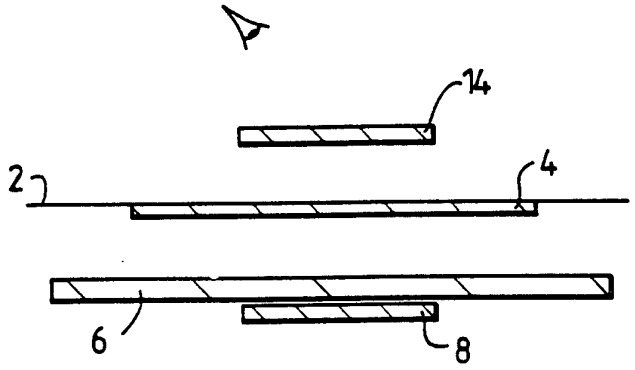

INTERNATIONAL SEARCH REPORT

Internal Application No
PCT/GB 94/02611

A. CLASSIFICATION OF SUBJECT MATTER
IPC 6 G02B27/22

According to International Patent Classification (IPC) or to both national classification and IPC

B. FIELDS SEARCHED

Minimum documentation searched (classification system followed by classification symbols)
IPC 6 G02B

Documentation searched other than minimum documentation to the extent that such documents are included in the fields searched

Electronic data base consulted during the international search (name of data base and, where practical, search terms used)

C. DOCUMENTS CONSIDERED TO BE RELEVANT

Category °	Citation of document, with indication, where appropriate, of the relevant passages	Relevant to claim No.
X	EP,A,0 460 873 (THORN EMI PLC.) 11 December 1991 cited in the application see column 4, line 29 - column 5, line 57; figures 1,2,5	1,2,5
A	US,A,4 799 763 (J. R. DAVIS ET AL.) 24 January 1989 see column 6, line 3 - column 7, line 67; figures 5-7	1-3
A	WO,A,89 09423 (LASER 681 S.R.L.) 5 October 1989 see the whole document	1-3

☐ Further documents are listed in the continuation of box C.

☒ Patent family members are listed in annex.

° Special categories of cited documents :

"A" document defining the general state of the art which is not considered to be of particular relevance

"E" earlier document but published on or after the international filing date

"L" document which may throw doubts on priority claim(s) or which is cited to establish the publication date of another citation or other special reason (as specified)

"O" document referring to an oral disclosure, use, exhibition or other means

"P" document published prior to the international filing date but later than the priority date claimed

"T" later document published after the international filing date or priority date and not in conflict with the application but cited to understand the principle or theory underlying the invention

"X" document of particular relevance; the claimed invention cannot be considered novel or cannot be considered to involve an inventive step when the document is taken alone

"Y" document of particular relevance; the claimed invention cannot be considered to involve an inventive step when the document is combined with one or more other such documents, such combination being obvious to a person skilled in the art.

"&" document member of the same patent family

Date of the actual completion of the international search	Date of mailing of the international search report
13 April 1995	17. 05. 95
Name and mailing address of the ISA European Patent Office, P.B. 5818 Patentlaan 2 NL - 2280 HV Rijswijk Tel. (+ 31-70) 340-2040, Tx. 31 651 epo nl, Fax: (+ 31-70) 340-3016	Authorized officer Sarneel, A

Form PCT/ISA/210 (second sheet) (July 1992)

INTERNATIONAL SEARCH REPORT

Interr nal Application No
PCT/GB 94/02611

Patent document cited in search report	Publication date	Patent family member(s)		Publication date
EP-A-0460873	11-12-91	AU-B-	636228	22-04-93
		AU-A-	7819991	12-12-91
		JP-A-	4339488	26-11-92
US-A-4799763	24-01-89	NONE		
WO-A-8909423	05-10-89	AU-A-	3180989	16-10-89
		EP-A,B	0410968	06-02-91