F. D. SWEET.

PUMP.

APPLICATION FILED MAR. 25, 1921.

1,400,578. Patented Dec. 20, 1921.

Fig. 1.

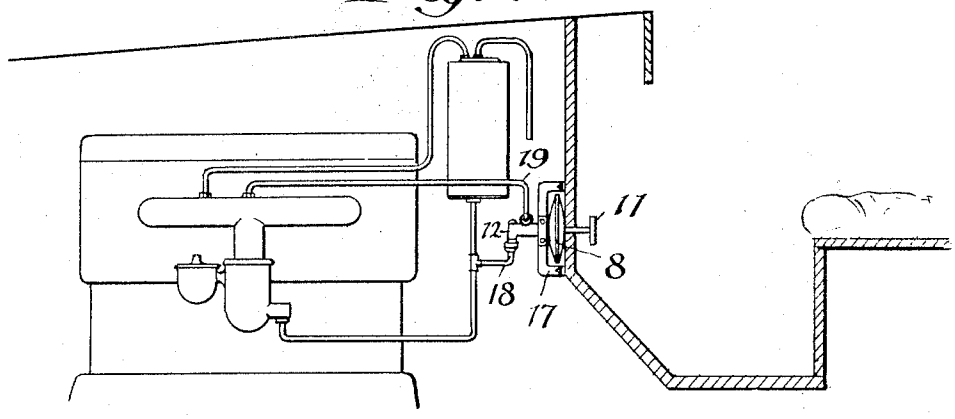


Fig. 2.

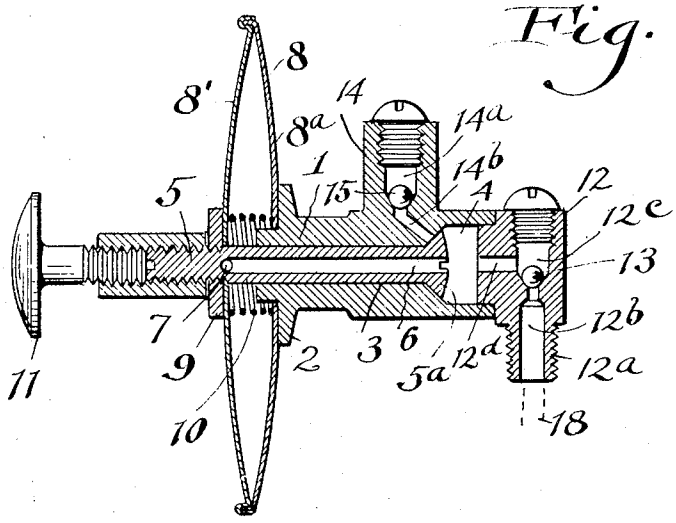


Fig. 3.

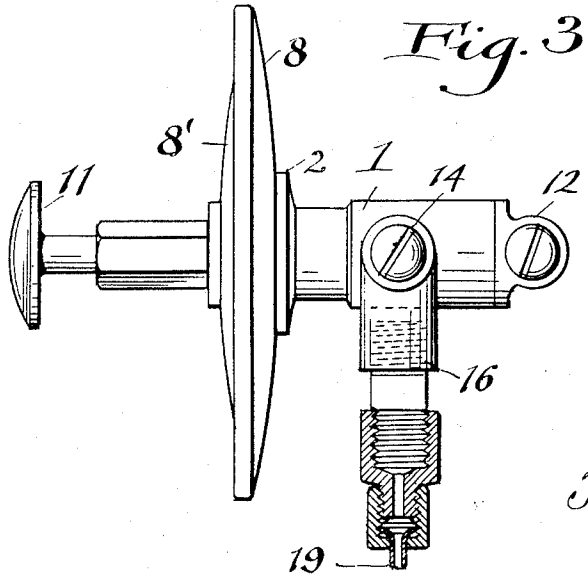


Inventor:
Frederick D. Sweet
by
Thurston Kwis & Hudson
attys.

# UNITED STATES PATENT OFFICE.

FREDERICK D. SWEET, OF CLEVELAND, OHIO.

## PUMP.

1,400,578. Specification of Letters Patent. Patented Dec. 20, 1921.

Application filed March 25, 1921. Serial No. 455,444.

*To all whom it may concern:*

Be it known that I, FREDERICK D. SWEET, a citizen of the United States, residing at Cleveland, in the county of Cuyahoga and State of Ohio, have invented a certain new and useful Improvement in Pumps, of which the following is a full, clear, and exact description.

The present invention relates to a pump or forced feed apparatus which is particularly designed and adapted for use in supplying limited quantities of material from a source of supply to a desired delivery point.

The device finds particular utility as a pump for receiving limited quantity of gasolene or similar fluid fuel from a suitable source and forcing the same under pressure to the manifold of an internal combustion engine.

The pump may be made of small compass so that it may readily be attached to the dash-board or other convenient portion of an automobile, requiring but little room but providing a construction which will produce sufficient pressure in delivering a charge from the pump to insure same being carried to its destination.

Referring to the drawings, Figure 1 indicates diagrammatically the association of the pump with the various instrumentalities of an automobile whereby the pump serves as a priming means for the engine; Fig. 2 is a vertical sectional elevation; Fig. 3 is a top plan view with portions in section.

Referring to the drawing, 1 indicates a body which externally has a shoulder 2 at one end thereof. Through the body there is a longitudinal opening which at one end terminates in an enlarged chamber 4. Through the opening 3 there extends a rod 5 which throughout a portion of its length is provided with a central duct 6 which at one of its ends communicates with the chamber 4, while at the opposite end of the duct 6 there is an opening 7 which opens onto the outer surface of the rod 5.

There is a casing which is generally represented at 8, which casing consists of two dished members which are joined at their outer edge and at their central portions are spaced apart. The casing 8 has one of its members or walls which is indicated at $8^a$ made of flexible material, such for instance as light gage sheet metal so that the wall 8′ may be moved toward the other wall of the casing.

The portion $8^a$ of the casing is provided with a central opening which seats against the shoulder 2 of the body 1. The member 8′ of the casing is provided with a central opening through which extends the rod 5. The rod 5 is threaded adjacent the end and receives a nut 9 which bears against the portion 8′ of the casing, thereby to position the rod with respect to the casing. Within the casing and surrounding the rod 5 is a spring 10 which operates to force a part of the member $8^a$ and 8′ of the casing. Connected with the rod 5 is an operating member 11 which serves for engagement by the hand or foot of the operator for forcing the wall 8′ inwardly against the action of the spring 10.

At the end of the rod 5 which is within the chamber 4, the rod is enlarged to form a head as indicated at $5^a$ and this head fits against the slanting end wall of the chamber 4. This head therefore serves as a stop to limit the outward movement of the rod 5 and of course the end of the casing 2 serves as an abutment to limit the inward movement of the rod 5.

To the end of the casing 1 there is an end member 12. This end member has an extension $12^a$ to which may be attached a conduit or pipe for conducting a liquid to the pump. Through this portion $12^a$ is a conduit $12^b$ which leads to a chamber $12^c$ from which in turn leads a conduit $12^d$ which communicates with the chamber 4. A ball valve 13 is within the chamber 12 permitting passage of liquid to the chamber 4 but restraining the passage of liquid in the opposite direction.

Either formed integrally with or secured to the body 1 is an extension 14 which has a chamber $14^a$ and there is a passageway $14^b$ which leads from the chamber and extends through the wall of the member 1, the passageway opening into the chamber 4. The opening of the duct $14^b$ is at that portion of the wall of the chamber 4 which normally is engaged by the underside of the head $5^a$ so that the head $5^a$ forms a closure for the end of the duct $14^b$.

This construction is important, because when the engine is operating, the suction of the engine would tend to draw gasolene through valve 15 which of course would be objectionable. This is prevented by the fact the enlarged head $5^a$ covers passageway $14^b$ and is held in this position unless positively moved by pushing the handle 11.

Within the chamber $14^a$ is a ball valve 15 which permits liquid to pass outwardly through the duct $14^b$ but prevents the return of liquid which has passed through this duct.

The extension 14 serves as a connection by which a coupling 16 or other suitable means may connect to a pipe or conduit for conveying liquid to the desired destination.

In operation, when the handle 11 is pushed inwardly the wall 8′ of the casing is pushed inwardly and any liquid which is in the chamber between the walls $8^a$ and 8′ will be forced through the opening in the rod 5 into the chamber 4 and out through the duct $14^b$ and past the valve 15, exit of liquid through the duct $12^d$ being prevented by the valve 13.

When the handle 11 is released the spring 10 pushes the wall 8′ outwardly, thus causing a suction within the chamber 4 which draws liquid through the duct $12^b$, past the valve 13 and into the chamber 4, and through the hollow portion of the rod 5 and between the wall 8′ of the casing, although it is not probable that the casing will become entirely filled with liquid.

In Fig. 1 there is shown one application of the pump and its preferred application, wherein the pump structure which has been described is mounted by means of a suitable bracket 17 upon the underside of the dashboard or vertical front wall portion adjacent the seat of an automobile, the operating handle extending through the wall upon which it is mounted so as to be in convenient position to engage by the foot of the driver when it is desired to prime the engine. The portion $12^a$ of the pump casing is connected by means of a pipe 18 with the gasolene tube which leads from the vacuum tank to the carbureter while the extension 14 is connected by means of a pipe 19 with the manifold of the engine.

While the pump is particularly designed and intended for use in priming gas engines, it is not intended to limit its use entirely to this field.

Having described my invention, I claim—

1. A pump comprising a body having a longitudinal opening through the same which opens into an enlarged chamber at an end thereof, a reciprocable rod extending through the said opening, said rod being provided with a longitudinal duct extending part way of its length and communicating with the said chamber, said duct having an opening to the outer surface of the rod at one end of the duct, a casing having a movable wall, the opening in the duct communicating with the interior of the casing, a liquid inlet and a liquid outlet communicating with the said chamber in the body and valvular means controlling both inlet and outlet.

2. A pump comprising a body having a longitudinal opening extending through the same which opens into an enlarged chamber at an end thereof, a casing having a wall with an opening through the same which opening receives the end of said body and to which it is secured, the casing having a second wall with an opening therethrough, a rod extending through said opening, said rod extending also through the opening in the body, said rod having a duct extending therethrough and establishing communication between the interior of the casing and the chamber at the end of the body, one of the said walls of the casing being movable when pressure is applied to the rod, a liquid inlet and a liquid outlet communicating with the chamber at the end of the body and valvular means for controlling the said inlet and outlet.

3. A pump comprising a body having a longitudinal opening extending through the same which opens into an enlarged chamber at an end thereof, a casing comprising two disk like dished members which are secured at their outer ends and spaced apart at the central part thereof, one of said disk members being flexible and movable toward the other, one of said disk members being provided with an opening which engages with the end of the body to which it is secured, the other of said disk members having an opening, a rod extending through said opening and also extending through the opening in the body, a spring member within the casing and surrounding the rod to normally keep the disk members of the casing spaced apart, an abutment member mounted upon said rod and bearing against one of the disks of said casing, the end of the rod which extends within the chamber of the casing being enlarged and normally engaging with a wall of said casing, a liquid inlet and a liquid outlet communicating with the said chamber in the body and valvular means controlling both inlet and outlet.

4. A pump comprising a body having a longitudinal opening through the same which opens into an enlarged chamber at an end thereof, a reciprocable rod extending through the said opening, said rod being provided with a longitudinal duct extending part way of its length and communicating with the said chamber, said rod having an enlarged head which engages a wall of said chamber, said duct having an opening to the outer surface of the rod at one end of

the duct, a casing having a movable wall, the opening in the duct communicating with the interior of the casing, a liquid inlet and a liquid outlet communicating with the said chamber in the body and valvular means controlling both inlet and outlet, one of said valvular means having a duct which communicates with said chamber, the head of said rod normally covering the opening of said duct.

In testimony whereof, I hereunto affix my signature.

FREDERICK D. SWEET.