No. 836,890. PATENTED NOV. 27, 1906.

J. H. PHILLIPS, JR.

STOCK CAR PARTITION.

APPLICATION FILED JUNE 18, 1906.

2 SHEETS—SHEET 1.

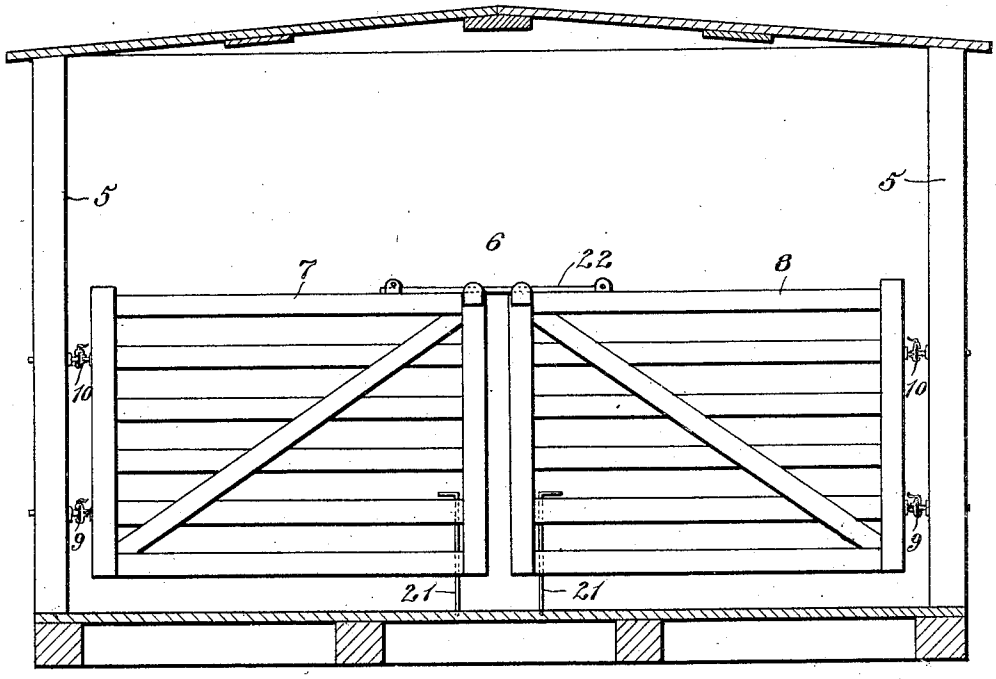

Fig. 1.

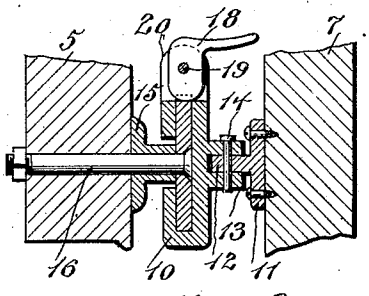

Fig. 2.

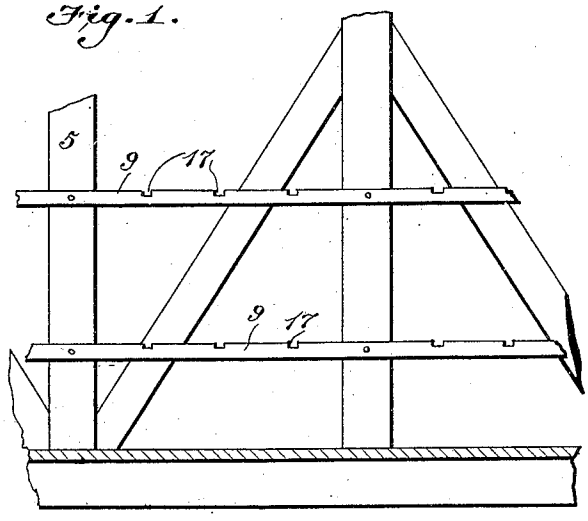

Fig. 3.

WITNESSES:

J. A. Barron.

M. A. Schmidt.

J. H. Phillips, Jr. INVENTOR

BY Milo B. Stevens & Co.

Attorneys

THE NORRIS PETERS CO., WASHINGTON, D. C.

No. 836,890. PATENTED NOV. 27, 1906.

J. H. PHILLIPS, JR.

STOCK CAR PARTITION.

APPLICATION FILED JUNE 18, 1906.

2 SHEETS—SHEET 2.

Fig. 4.

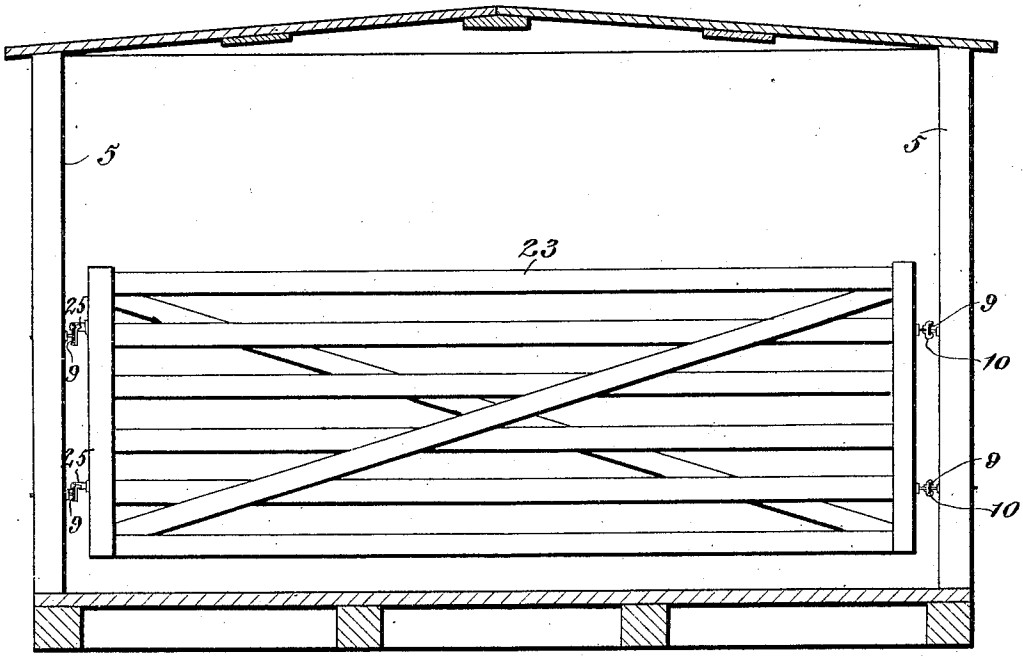

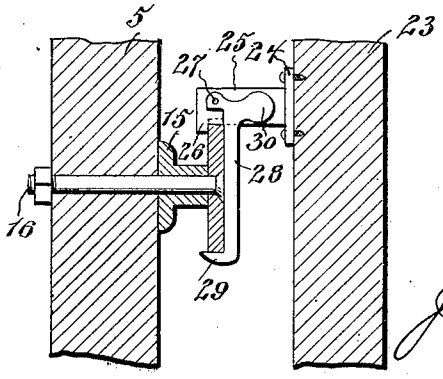

Fig. 5.

WITNESSES:

F. A. Barron

M. A. Schmidt

J. H. Phillips Jr.

INVENTOR

BY Milo B. Stevens & Co.

Attorneys.

THE NORRIS PETERS CO., WASHINGTON, D. C.

UNITED STATES PATENT OFFICE.

JOHN HENRY PHILLIPS, JR., OF JACKSON, MICHIGAN.

STOCK-CAR PARTITION.

No. 836,890. Specification of Letters Patent. Patented Nov. 27, 1906.

Application filed June 18, 1906. Serial No. 322,254.

To all whom it may concern:

Be it known that I, JOHN HENRY PHILLIPS, Jr., a citizen of the United States, residing at Jackson, in the county of Jackson and State of Michigan, have invented new and useful Improvements in Stock-Car Partitions, of which the following is a specification.

This invention relates to stock-cars, and more particularly a partition for such cars.

The object of the invention is to provide a movable and adjustable partition embodying certain novel features of construction to be hereinafter described and claimed.

In the accompanying drawings, Figure 1 is a transverse sectional view of the car, showing the application of the invention. Fig. 2 is an enlarged vertical sectional view of the hinge connection hereinafter referred to. Fig. 3 is a longitudinal section of a part of the car, showing the track. Fig. 4 is a transverse sectional view of the car, showing a modification. Fig. 5 is an enlarged elevation of the latch employed in connection with the modified form of partition.

Referring specifically to the drawings, 5 denotes the side walls of a stock-car, and 6 the partition inside the car. The partition is in two sections, (indicated at 7 and 8, respectively,) which meet at or about the middle of the car and are each slidably mounted on tracks 9, secured to and extending along the side walls 5 from one end of the car to the other.

The partition-sections 7 and 8 are carried by hangers 10, which are slidably mounted on the tracks, and a hinge connection is provided, so that the sections can be swung around against the side walls 5 when not in use. The hinge connection is made by plates 11, secured to the sections and having knuckles 12, which extend between knuckles 13, formed on the hangers. The pivot-pins 14, on which the sections swing, extend through registering openings in the knuckles.

The tracks are spaced from the side walls by blocks 15 and are fastened by bolts 16, the heads of which are countersunk in the tracks, so that a smooth surface is presented to the hangers 10. The tracks are notched on top, as at 17, and the hangers carry catches 18, which upon entering the notches 17 hold the sections in adjusted position on the track. The catches are cam-shaped and are pivoted at 19 between cheeks 20, extending from the hangers. At the inner ends of the partition-sections are vertically-sliding pins 21, which drop into holes in the floor of the car when the sections are in position, whereby they are locked. The tops of the sections are fastened together by suitable latches 22.

In practice one partition will be placed at each end of the car, whereby three separate compartments are had, which is advantageous and a convenience in sorting out and loading mixed stock. The size of the compartments can be readily varied by adjustment of the partitions along the tracks. When the partitions are not in use, they can be placed at the extreme ends of the car or swung around against the side walls and fastened thereto by any suitable device.

The modified form of partition shown in Fig. 4 comprises a single gate 23, which is mounted at one end on notched tracks 9 in the same manner as the sections 7 and 8. At the opposite end the gate carries latches which are engageable with the notched tracks 9 on that side of the car. Each latch comprises a plate 24, secured to the end of the gate and having an outwardly-projecting stem 25, adapted to be placed in one of the notches 17 of the tracks 9. The end of the stem is formed with a downwardly-presented hook 26, which engages behind the track. To the stem 25 is pivoted, as at 27, a finger 28, which extends in front of the track and has at its free end a hook 29, which extends under the track. The finger is weighted on one side, as at 30, which tends to throw it forwardly against the front of the track. The modified form of partition can be operated in the same manner as the one first described.

I claim—

The combination with a car having notched tracks extending along the side thereof, of hangers slidably mounted on the tracks, a partition hinged to the hangers, and a catch on the hangers and engageable with the notches in the tracks to hold the partition in adjusted position.

In testimony whereof I have signed my name to this specification in the presence of two subscribing witnesses.

JOHN HENRY PHILLIPS, JR.

Witnesses:
C. R. WALLACE,
FLORENCE M. JACKSON.