Aug. 28, 1951 T. BRODAHL 2,565,676

STOVE FOR STEAM BATHROOM

Filed Dec. 29, 1947

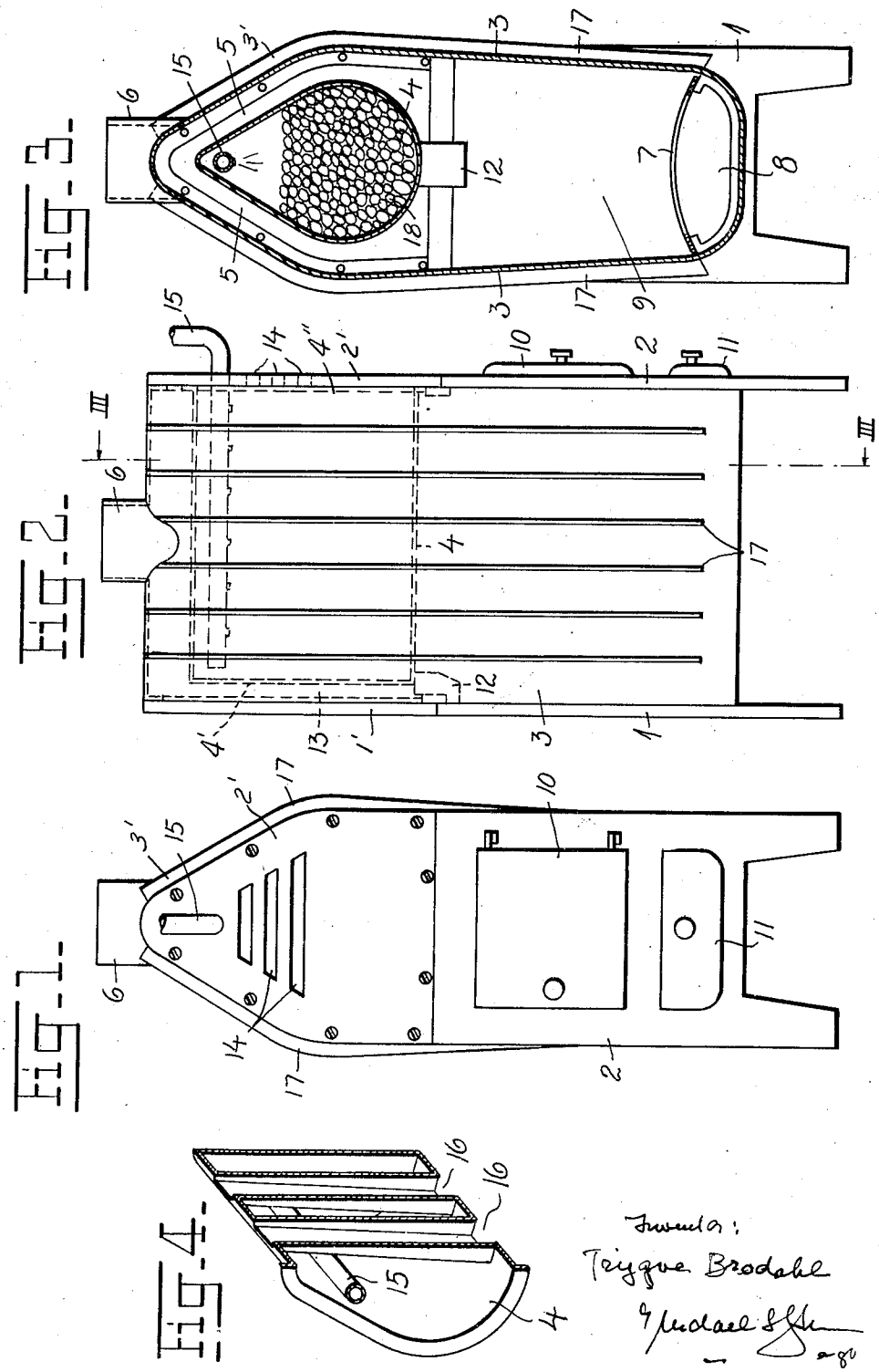


Inventor:
Trygve Brodahl
by Michael S. Stern
Agt

Patented Aug. 28, 1951 2,565,676

# UNITED STATES PATENT OFFICE

2,565,676

## STOVE FOR STEAM BATHROOMS

Trygve Brodahl, Storjordet, Honefoss, Norway

Application December 29, 1947, Serial No. 794,372
In Norway March 13, 1943

Section 1, Public Law 690, August 8, 1946
Patent expires March 13, 1963

3 Claims. (Cl. 126—344)

1

This invention relates to improvements in stoves for steam bath-rooms of the type having a container above the combustion chamber for containing heat accumulating material, such as stones, which upon admission of water thereto generate superheated steam.

The object of the invention is to provide a stove of the above mentioned type which ensures an increased circulation of the bath-room air, a more intimate contact between such air and the heat emitting surfaces of the stoves and between such surfaces and the combustion gases and the stone container provided in the stove, whereby the body of stones becomes so heated that an effective generation of steam may take place.

The invention is characterised in that the container is of substantially pear shaped cross section and the upper end portions of the side walls of the housing converge parallel thereto whereby relatively narrow outlet channels of uniform cross section are formed between the walls of said housing and container, and said channels meeting at the top of the housing towards the outlet for the combustion gases.

In order that the invention may be more clearly understood one particular embodiment thereof will now be described by way of example, with reference to the accompanying drawing wherein:

Figure 1 is a front view of the stove,

Figure 2 is a side view thereof,

Figure 3 is a vertical cross section along the line III—III in Figure 2, and

Figure 4 is a vertical longitudinal section through a modified embodiment of the stone container.

In the drawing 1 and 2 indicate the two end walls of the stove, which are provided with legs and preferably have detachable top portions 1', 2' for giving access to the inside of the stove and thus facilitate replacing or exchanging of parts. Between said end walls 1 and 2 is mounted a housing 3 forming a combustion chamber 9, which in vertical cross section has a round shape at its lower end and widens uniformly up to about two thirds of its height, above which its width again decreases uniformly so that the housing terminates in converging side walls in a tapered portion 3' at the top. The housing may be provided with usual surface ribs 17 as shown.

A container 4 for heat retaining solid material, such as stones 18, arranged in the top part of the housing 3 above the combustion chamber has converging side walls and is of pear-shaped cross section, so that between said container 4 and the adjacent walls of the housing 3 there are formed

2

relatively narrow channels 5 of uniform cross section for the combustion gases. At the top of the housing 3 is an outlet 6, preferably arranged on the longitudinal axis of the stove.

At some distance above the bottom of the housing 3 is provided a grate 7 bounding off an ash pit 8 from the combustion chamber 9 situated above it, access being had to these chambers 8 and 9 in usual manner through doors 10 and 11 respectively provided in one end wall 2.

One end 4'' of the container 4 is open and connected to the end wall 2, and the other end thereof rests upon brackets 12 secured to the other end wall 1, the length of the container preferably being somewhat less than the distance between said end walls, so that a narrow channel 13 for combustion gases is formed between the rear end wall 4' of the container and the end wall 1.

The end wall 2 is provided with one or more relatively large slotted openings 14 which open from the interior of the container 4 to enable the issue of super-heated steam, which is obtained by admitting water to the heated stones or other material through a tube 15, which is introduced into the container and extends longitudinally near the top or apex thereof.

In the embodiment of the stove described above the combustion gases from the chamber 9 flow upwardly through the channels 5 at each side of the container 4 with negligible resistance due to the uniform cross section of said channels, and due to the relatively narrow cross section thereof the gases will also attain considerable velocity whereby an intense transmission of heat from the gases to the channel bounding surfaces of the housing 3 and the container 4 is obtained.

Due to the upwardly tapered shape of the container 4 soot and ashes is prevented from accumulating thereon and of thus preventing the passage of the gases or an effective heat exchange. The shape of the container 4 also provides for a more effective generation of steam, because the water introduced at the top of the container will be more uniformly distributed over the walls of the container and the heated body of stones or other material.

The air in the bath-room will, due to the streamline shape of the outer surface of the housing, flow upwardly in intimate contact with said surface without formation of eddies, and in combination with the increased issue of heat from the housing 3, due to the arrangement of the channels 5, a highly increased circulation of well

heated air in the room is effected, which ensures a more effective and rapid bathing action.

Due to the particular arrangement of the channels 5 an increased amount of heat is taken up by the walls of the container 4 and transferred to the body of stones therein, at the same time as radiant heat from the combustion chamber acts directly against the lower part of the container.

To increase the heat absorbing areas of the container, said container may be provided with one or more vertical through channels or ducts 16, as illustrated in Figure 4, the cross sections of which ducts decrease towards the top of the container, where their width is so small that only the amount of gas necessary for heating of the interior layers of the body of stones can pass through. When the container is provided with such ducts 16, two jet tubes 15 are preferably arranged, each extending longitudinally of the container on each side of the ducts.

The above arrangements overcome the previously experienced disadvantage of stoves of this type, which was that the body of stones became insufficiently heated to produce the desired superheated steam.

I claim:

1. A stove for a steam bathroom comprising in combination a housing composed of two opposite end walls having detachable upper end wall portions and two side walls having upper converging side wall portions; a combustion chamber in the lower portion of said housing; a container arranged in the upper portion of said housing and having also converging side walls being parallel to said converging side wall portions of said housing and being spaced therefrom said container having a rear wall at one end and being open at its other end; relatively narrow outlet channels of uniform cross section formed between said converging side wall portions of said housing and said converging side walls of said container; heat retaining solid material arranged in said container; tube means for introducing water into said container so that the same contacts said heat retaining material when introduced into said container and creates steam within said container; a bracket mounted on one of said opposite end walls; said open end of said container being connected to the detachable upper end wall portion of the other of said opposite end walls; said container resting when inserted into said housing on said bracket and forming between its rear wall and the adjacent detachable upper end wall portion of said housing a relatively narrow rise channel for the combustion gases; and means in said detachable upper end portion of said other of said opposite end walls for discharging said steam from said container.

2. A stove for a steam bathroom comprising in combination a housing composed of two opposite end walls and two side walls having upper converging side wall portions; a combustion chamber in the lower portion of said housing; a container arranged in the upper portion of said housing and having also converging side walls being parallel to said converging side wall portions of said housing and being spaced therefrom said container being open at one end; relatively narrow outlet channels of uniform cross section formed between said converging side wall portions of said housing and said converging side walls of said container; heat retaining solid material arranged in said container; tube means for introducing water into said container so that the same contacts said heat retaining material when introduced into said container and creates steam within said container; slotted openings in one of said end walls; means for securing said container to the last mentioned end wall with its open end facing and connected to said end wall so as to permit escape of steam from said container through said slotted openings; and means on the other of said end walls for supporting said container within said housing.

3. A stove for a steam bathroom comprising in combination a housing composed of two opposite end walls and two side walls having upper converging side wall portions; a combustion chamber in the lower portion of said housing; a container arranged in the upper portion of said housing and having also converging side walls being parallel to said converging side wall portions of said housing and being spaced therefrom; relatively narrow outlet channels of uniform cross section formed between said converging side wall portions of said housing and said converging side walls of said container; heat retaining solid material arranged in said container; tube means for introducing water into said container so that the same contacts said heat retaining material when introduced into said container and creates steam within said container; at least one gas duct extending vertically through said container and having a cross section decreasing towards the top of the same; and means for discharging the steam created within said container.

TRYGVE BRODAHL.

REFERENCES CITED

The following references are of record in the file of this patent:

UNITED STATES PATENTS

| Number | Name | Date |
|---|---|---|
| 90,464 | Raith | May 25, 1869 |
| 165,393 | White | July 6, 1875 |
| 269,873 | Michael | Jan. 2, 1883 |
| 538,505 | Chaffin | Apr. 30, 1895 |
| 781,705 | Woods | Feb. 7, 1905 |
| 1,857,024 | Hulme | May 3, 1932 |

FOREIGN PATENTS

| Number | Country | Date |
|---|---|---|
| 10,961 | Great Britain | of 1893 |
| 67,859 | Norway | May 22, 1944 |