Nov. 3, 1925. 1,559,714

J. E. LILIENFELD

ART OF RELEASING ELECTRONS IN VACUUM DISCHARGE DEVICES

Filed March 8, 1920 2 Sheets-Sheet 1

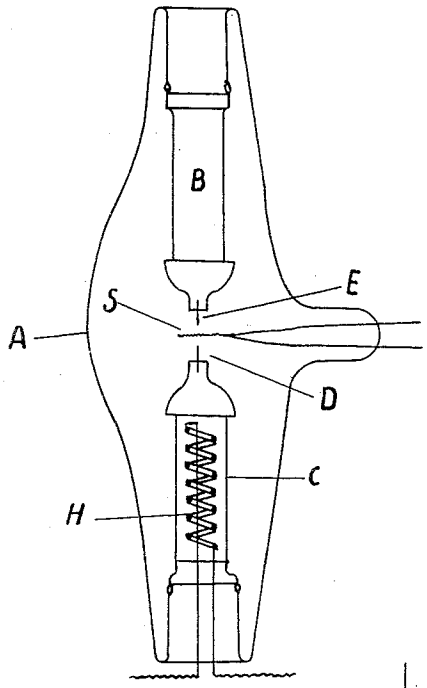

Fig. 1.

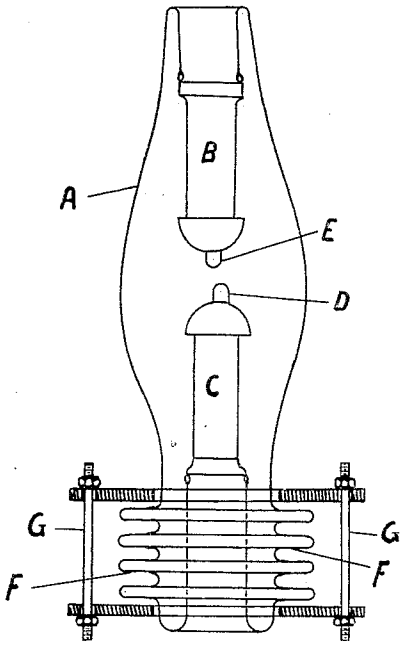

Fig. 2.

Fig. 7.

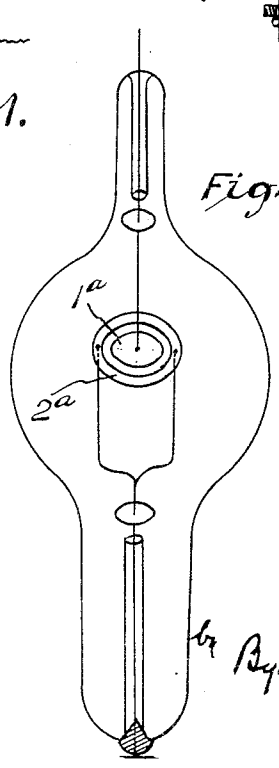

Fig. 6.

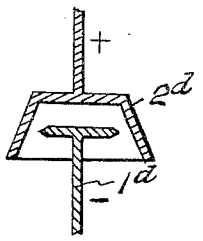

Fig. 5.

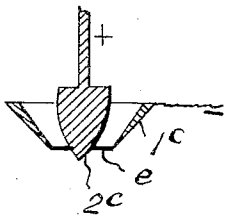

Inventor
Julius Edgar Lilienfeld

by Byrnes Townsend & Brickenstein
Attys

Nov. 3, 1925. 1,559,714

J. E. LILIENFELD

ART OF RELEASING ELECTRONS IN VACUUM DISCHARGE DEVICES

Filed March 8, 1920 2 Sheets-Sheet 2

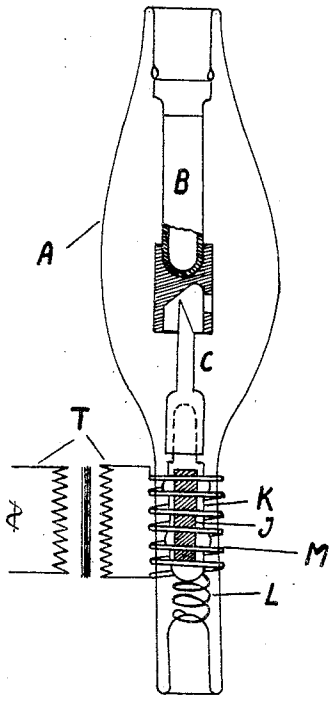

Fig. 3.

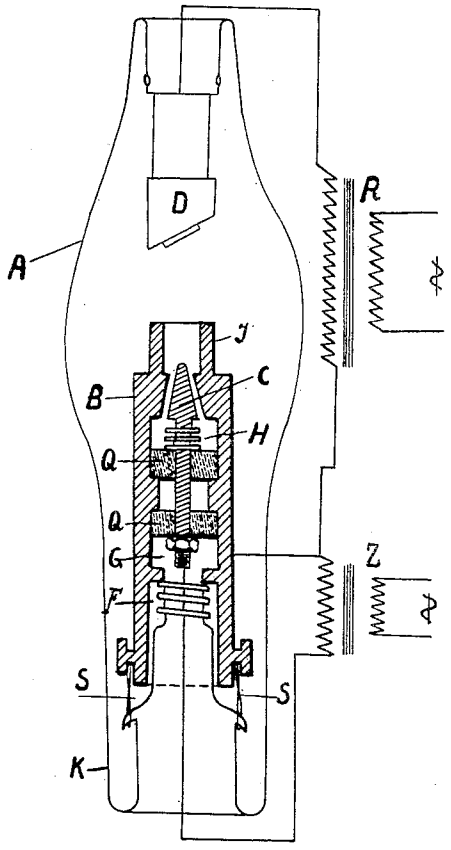

Fig. 4.

Inventor,
Julius Edgar Lilienfeld
by Byrnes Townsend & Brickenstein
Attys.

Patented Nov. 3, 1925. 1,559,714

UNITED STATES PATENT OFFICE.

JULIUS EDGAR LILIENFELD, OF LEIPZIG, GERMANY, ASSIGNOR OF ONE-TENTH TO JOHN H. BRICKENSTEIN.

ART OF RELEASING ELECTRONS IN VACUUM DISCHARGE DEVICES.

Application filed March 8, 1920. Serial No. 364,215.

To all whom it may concern:

Be it known that I, JULIUS EDGAR LILIENFELD, residing at Leipzig, Mozartstrasse 4, Germany, have invented certain new and useful Improvements in the Art of Releasing Electrons in Vacuum Discharge Devices, of which the following is a specification.

This invention relates to the art of setting free electrons in electrical vacuum and discharge devices as used for various technical purposes, such as the production of X-rays, relaying and detecting currents, producing oscillations and so forth.

The invention is based upon the discovery that even in the highest vacuum very considerable currents may be made to pass between cold electrodes in absence of any positive ionization, if only a gap between the electrodes is chosen, which is sufficiently short. The discharge is greatly facilitated by forming the electrodes or one of them, preferably the cathode into the shape of points, edges—generally into the shape of surfaces with a radius of curvature which is small in comparison with the gap between the electrodes. It is also advantageous to make the electrodes or one of them, preferably the cathode of a metal of high fusing point.

The figures in the drawings show more or less diagrammatically by way of examples various arrangements for carrying out the objects of the invention.

In Fig. 1 a highly evacuated glass-envelope A contains two electrodes B and C on whose inner ends are mounted sharp edged blades D, E consisting of a refractory metal i. e. a metal having a high fusing point such as for example platinum, tungsten, tantalum. The edges are closely adjacent to each other; their distance may be about 3 mm. As the operation of the tube depends highly upon said distance, the voltage augmenting with increasing gap and vice versa, arrangements are made to regulate it according to requirement. In Figs. 1–3 different means are shown for doing it. In Fig. 1 the shafts of the two electrodes—or one of them, preferably the anode—are hollow, made of an iron or copper-tube. In these hollow shafts may be mounted heating bodies H by means of which the electrodes may be heated up to a temperature of about 300° whereby an expansion of the metal is produced causing one or each of the blades D, E to move towards the other.

In Fig. 2 the distance of the electrodes is regulated by means of an elastic glass or metal body F which is mounted upon the outer end of one of the electrodes C, said elastic body being adapted to be compressed by means of a press G.

In Fig. 3 other means of changing the gap are shown. The active end of the electrode C is mounted upon an iron core being under the influence of the magnetic field of the solenoid M and so determining the position of the electrode. To facilitate the evacuation of the device the iron core J is preferably enclosed in a glass envelope K fixed to a spring L of heat proof material, e. g. tungsten. The distance of the electrode C from B is regulated according to whether the solenoid M is excited more or less by a current supplied from the transformer T whose secondary is highly insulated from the primary. In order to drive out the gas occluded in the metals of the tube, particularly in the blades, a loop S of tantalum or tungsten wire may be arranged besides the main electrodes, means being provided to heat said wire like a filament of an incandescent lamp. The loop S is shown in Fig. 1 by way of example. This glower is used only during the exhaustion of the tube and may be occasionally dispensed with as a bombardment may be carried out directly from the blades. The voltage required to cause an electric discharge current in the device Fig. 1 amounts to about 10,000 to 30,000 volts with a gap of 0,5–1 mm. width, and may vary with the sharpness of the edges and the width of the gap the voltage augmenting with increasing distance. It is independent of the vacuum, providing the pressure is below a certain minimum. The discharge is accompanied by an intense emission of X-rays, a centre of emission being clearly observed in close proximity to the edges. This latter observation is conclusive evidence that the discharge cannot be caused by the ionization of residual gas but must be based on a different principle.

It is well known that the discharge in an ionized gas—for instance that in the usual X-ray-tube—having the choice between a narrow gap and a longer way, chooses the

latter. This phenomenon has been demonstrated for many years usually to students of experimental physics with aid of a model tube known in physics by the name of "Hittorfs umwegröhre." The physical reason for this phenomenon is the presence in proximity to the cathode, of the "cathode dark space" containing exceedingly few ions and offering by consequence a remarkable resistance to the discharge intended to pass through. So the fact of the discharge passing in the tube Fig. 1 over the narrow gap together with the other fact of the voltage diminishing as the gap is shortened is again—besides the existence of the high vacuum and the independence of the discharge from the residual gas mentioned above—an evidence that the discharge is not carried by a possible ionization of the residual gas, but that the working of the tube is based upon quite another principle. Indeed, it must be emphasized that this new form of discharge involves no ionization. Neither is the residual gas ionized, nor are there generated in the inter-electrode space any ions of the molecules or atoms of the electrode, which latter phenomenon would be equivalent to the starting of an electric arc between the electrodes, as is well known. The discharge described herein and characterizing the invention has nothing to do with it.

The device according to Fig. 1 may be used as a commercial source of X-rays. Satisfactorily sharp pictures may be taken if the object is adjusted upon the rays bordering on the edges of the gap.

With regard to the adjustment of the electrodes in the highly evacuated glass-envelope it is to be remarked that they are not necessarily to be fixed at opposite ends of the glass tube as is shown in Figs. 1 and 2. On the contrary one of the electrodes or the shaft bearing the same may serve simultaneously as support for the second electrode. In this case, one of the electrodes or the support of the same is fixed to the other electrode by means of an insulating frame made of quartz as shown in Fig. 4. The advantage of this construction is that the gap between the electrodes is well defined and especially independent of the temperature, which is very important if working the tube continuously for the purposes of deep therapy.

Different shapes of the electrodes may be employed such as semispheres, forms similar to paraboloids (Fig. 2) or the like. If, however, edges situated in the same plane are to be used a concentrical arrangement may be used, one of the electrodes consisting of a circular or ellipitical disk 1^a, the other of a ring 2^a of corresponding shape (see Fig. 7). All symmetrical arrangements present the advantage that they may be worked not only by direct current, but also by alternating voltage. In the latter case each of the two electrodes is alternatingly cathode and anode; the presence of a double focus is mostly not disturbing owing to the small distance between the edges.

Non-symmetrical arrangements of the electrodes act generally as valves and may be used for the purpose of rectifying alternating currents. The current passes only in one direction, the pointed or sharp edged electrode being the cathode and the current in reverse direction being cut off as is well understood. A non-symmetrical device of the character shown in Fig. 3 in which the anode has the shape of a hollow body, enveloping the pointed cathode is of special interest also as a source of X-rays. While the depression or concavity constituting the active surface of the anode is preferably a surface of revolution and the cathode point is preferably co-axially related thereto, such arrangement is by no means essential to the operation. In Fig. 3 I have shown arrangements which comprise, in the broader aspect, two co-axial cones, the inner one being cathodically active. However, within the scope of the invention, the inner element may have the form of a sharp-edged disk concentrically spaced from the wall of the hollow electrode. Such an arrangement is shown in Fig. 6 in which the cathode disk 1^d is co-axially spaced from a surface of revolution or the conical wall of the anode element 2^d in particular. The arrangement may be, moreover, reversed by forming the outer element as the cathode and the inner one as the anode as shown in Fig. 5, where 1^e is a conical body having a sharp edge e directed toward an inner electrode of relatively large and smooth surface. The advantage of such designs if employed as X-ray-tubes consist in the adaptation of the hollow electrode as a ray-protector by making it of absorbent material with walls sufficiently thick so that—for therapeutic purposes—the rays are filtered and screened and—if used for radiography—the plates are not troubled by stray-rays.

If for the purpose of deep therapy a radiation containing as few soft components as possible is to be produced, the gap between the electrodes is chosen so large that only the peak values of the alternating voltage are utilized for the production of X-rays. Particularly if working upon higher frequencies than these of the commercial alternating current up to 125 cycles it is advisable to choose the distance so that the peak of the voltage lies always near to the limit of its value at which the discharge starts. Thus a comparatively intense and penetrating radiation is obtained with a small output of energy and correspondingly with a comparatively low heating of the electrodes.

The discharge passing in high vacuum between two electrodes as said before may be used for various technical purposes.

It may more-over serve to set free electrons on the anode and so to provide them for further employment. With this object in view an auxiliary anode C is mounted in the boring of the cathode B (Fig. 7) so that it projects into the edges of the boring with little play. The rings Q of heat proof insulating material (quartz) fixed in the tubular shaft of B by means of a screw-threaded rod G and pressure-spring H serve to fix B and C together. The whole arrangement is mounted by means of the wire loops S and spring F to the seat K of the glass tube forming part of the evacuated glass envelope A. The discharge passing between the edges of B as cathode and C as anode sets free electrons which may go astray or may be focussed by the focussing-device J. This way these electrons may be employed for any technical purposes—e. g. the stream of electrons may be used in generating or receiving the electromagnetic waves or for acting as valve tubes or the electrons may be focussed and concentrated upon the target of the anode D and produce X-rays. The discharge between B and C may be started by the transformer Z, that between C and D by the transformer R. Or both discharges may be started from the same high tension transformer, whose poles are connected respectively to B and D, C being connected to a point of a high tension resistance M forming a circuit with the secondary of the transformer. This way the discharge between B and C determines the milliampereage between C and D and by consequence the intensity of the radiation, the voltage between C and D defining the penetration of the radiation.

In the claims the expression "surface of small radius" is intended to include all constructions defining edges or points in contradistinction to a relatively larger and smooth superficial area.

I claim as my invention:

1. A device for releasing electrons comprising a sealed envelope evacuated to such high degree that ionization is substantially prevented and unheated electrodes separated by a gap sufficiently short to permit the starting of the discharge between the cold electrodes upon the application of a suitable voltage.

2. Device for releasing electrons, comprising unheated electrodes separated by a narrow gap and an envelope surrounding the electrodes, the envelope being evacuated to such a high degree that upon the application of suitable voltage a substantially uniform pure electronic discharge may be maintained between the electrodes.

3. Device for releasing electrons, comprising unheated electrodes separated by a narrow gap and an envelope surrounding the electrodes, the envelope being evacuated to such a high degree that upon the application of a voltage in excess of 10,000 volts a substantially pure electronic discharge may be maintained between the electrodes.

4. Device for releasing electrons, comprising unheated electrodes separated by a narrow gap and an envelope surrounding the electrodes, the envelope being evacuated to such a high degree that upon the application of a voltage in excess of 10,000 volts a substantially uniform pure electronic discharge may be maintained between the electrodes.

5. Device for releasing electrons, comprising unheated electrodes separated by a narrow gap and an envelope surrounding the electrodes, the envelope being evacuated to such a high degree that upon the application of a variable voltage there may be maintained between the electrodes a substantially pure electronic discharge variable as a function of the voltage applied only.

6. Device for releasing electrons, comprising unheated electrodes separated by a narrow gap and an envelope surrounding the electrodes, the envelope being evacuated to such a high degree that upon the application of a suitable voltage there may be maintained a substantially uniform pure electronic discharge the character of which is a function of the geometrical configuration of the discharge ends of the electrodes.

7. Device for releasing electrons, comprising unheated electrodes separated by a narrow gap, the cathode having a surface of small radius of curvature, and an envelope surrounding the electrode, the envelope being evacuated to such a high degree that upon the application of a suitable voltage a substantially pure electronic discharge may be maintained between the electrodes.

8. Device for releasing electrons, comprising unheated electrodes, the cathode consisting of refractory metal, and an envelope surrounding the electrodes, the envelope being evacuated to such a high degree that upon the application of a suitable voltage a substantially pure electronic discharge may be maintained between the electrodes.

9. Device according to claim 7 in which the cathode defines one or more sharp points.

10. Device according to claim 7 in which the cathode defines a single sharp point.

11. Device according to claim 7 in which the anode has a concavity and the cathode has a sharp point directed toward the concavity.

12. Device according to claim 1 in which the gap is so adjusted relatively to the voltage of an oscillatory current circuit that only the peak values cause a discharge.

13. Device for producing X-rays, comprising unheated electrodes separated by a nar-

row gap and an envelope surrounding the electrodes, the envelope being evacuated to such a high degree that upon the application of a voltage suitable for producing X-rays a substantially pure electronic discharge may be maintained between the electrodes and a substantially uniform emission of X-rays may be effected.

14. Device for producing X-rays, comprising unheated electrodes separated by a narrow gap and an envelope surrounding the electrodes, the envelope being evacuated to such a high degree that upon the application of a variable voltage suitable for producing X-rays a substantially pure electronic discharge may be maintained between the electrodes and an emission of X-rays may be effected, the character of which varies as a function of the voltage applied.

15. The method of releasing electrons, which consists in impressing upon unheated electrodes a voltage under such high-vacuum conditions that no ionization takes place and holding the electrodes in such proximity to each other that a discharge is started between the cold electrodes.

16. Device according to claim 1 including means for regulating the gap between the electrodes.

17. Device according to claim 1 including means for regulating the gap between the electrodes, comprising an elastic body susceptible of deformation and interposed between an electrode and a stationary part.

18. In combination, an unheated cathode having a discharge end of small radius of curvature, an opposed anode, means for applying a high electromotive force across them and an envelope evacuated to such a high degree that under the influence of the electromotive force a substantially pure electronic discharge is effected between the electrodes.

In testimony whereof I affix my signature.

JULIUS EDGAR LILIENFELD.