June 6, 1967 J. GOLDBERG 3,324,301

PHOTOELECTRIC VEHICLE IDENTIFICATION SYSTEM

Filed Feb. 28, 1963

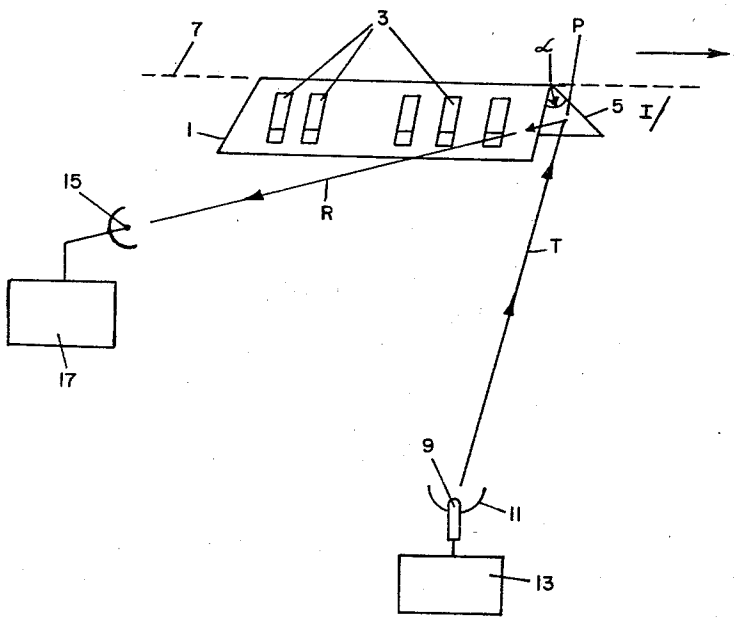

FIG. 1

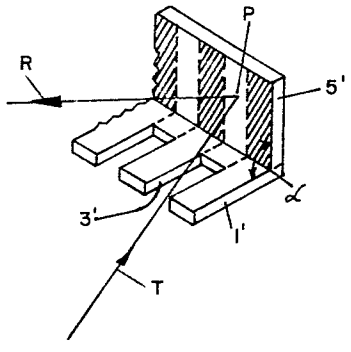

FIG. 2

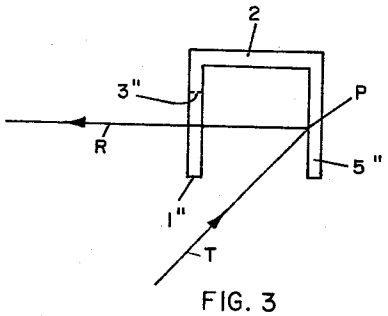

FIG. 3

JACOB GOLDBERG
INVENTOR.

BY Rines and Rines

ATTORNEYS

United States Patent Office

3,324,301

Patented June 6, 1967

3,324,301

PHOTOELECTRIC VEHICLE IDENTIFICATION SYSTEM

Jacob Goldberg, Burlington, Mass., assignor to Lan Jen Chu, Littleton, Mass.

Filed Feb. 28, 1963, Ser. No. 261,617
8 Claims. (Cl. 250—223)

The present invention relates to radiant-energy identification systems and methods and, more particularly, to systems and apparatus in which radiant energy, such as electromagnetic waves (light, infrared, microwave, etc.) or other types of radiant energy, all hereinafter embraced by the term "radiation," is employed to scan a coded identification tag or member.

One of the important uses for such systems is in the identification of moving vehicles, such as railroad cars or the like; and numerous types of reflecting surfaces having different radiation-absorbing regions, including slots, have been proposed. In these prior proposals however, the coating of dirt, grease, ice and other contaminants upon absorbing and/or reflecting regions have rendered the systems less than satisfactory in reliability and performance, in actual practice.

An object of the present invention, accordingly, is to provide a new and improved system and method that shall not be subject to such disadvantages; but that, to the contrary, shall provide reliable signal reflection and scanning of coded reflecting surfaces, irrespective of significant variations in the surfaces caused by contamination and other causes.

A further object is to provide a novel identification tag or member particularly adapted for use in the system of the invention.

Other and further objects will be explained hereinafter and will be more particularly pointed out in connection with the appended claims; the invention being described in connection with the accompanying drawing:

FIG. 1 of which is a combined perspective and block-diagram view of a preferred embodiment;

FIG. 2 is a fragmentary isometric view of a modification employing illuminated and shadow regions of an identification tag or member; and

FIG. 3 is a side elevation of still another modification.

Referring to FIG. 1, a source of radiation, as above defined, such as, for example, an infrared or visible light source **9**, energized from a circuit **13**, as of direct-current, alternating-current or stroboscopic type, is shown provided with relatively directional beam-forming or projecting means, illustrated as a parabolic reflector **11**, to transmit a confined radiation beam T long a path toward an identification tage or member I, carried by, for example, a vehicle, such as a railroad-car undercarriage or frame **7**.

In accordance with the invention, and as distinguished from prior-art proposals, the transmitted or incident radiation beam T need not directly impinge upon and reflect from the coded indentification surface **1** of the tage or member I; but, in FIG. 1, is shown, rather, impinging at P upon a reflecting surface **5** disposed rearward of the identification surface **1** and defining or enclosing an angle α therebetween. The beam T is reflected from the surface **5** at P along the path R. This reflection generally is diffused or scattered, but specular reflection, if desired, may be attained—all such being herein referred to generically as "reflection" or reflecting."

The reflected radiation R is permitted to pass through identification code apertures, such as parallel spaced pluralities of slots **3**, in various code arrangements, in the otherwise radiation-opaque identification surface **1**, as the vehicle moves in the direction of the arrow transversely past the source **9** along a predetermined course; thus providing coded on-off signals at a preferably directional receiver **15**, for indicating, storing or otherwise processing at the data apparatus **17**, of any desired conventional type.

It has been found that this background illumination technique, wherein the incident radiation is not directly reflected from the coded surface itself (which, to the contrary, is disposed in the path T–R between transmitter or source and receiver so that the received radiation, while passing through the coded surface, has been reflected from an adjacent reflecting surface before being received), renders the system substantially insensitive to normally encountered contamination. Whereas prior-art reflecting tags must rely upon the contrast between directly reflecting or absorbing regions and thus, as before stated, are detrimentally affected by coatings of ice, mud and other contaminants, the method of the present invention provides a reliable on-off signal irrespective of contamination upon the surfaces **1** or **5**, provided only that the slots **3** are not completely closed.

In experimental tests, for example, employing a General Electric type incandescent projection lamp **9** of the BMA 150-watt type, positioned about three feet from the tag I, and a receiver **15–17** employing a Texas Instrument Company 1N2175 photodiode and receiving circuit positioned about four feet from the tag I, on-off signal contrast in the ratio of over 100-to-1 was obtained between the signal in the presence of a slot **3** and the no-signal condition. The slots **3** were about three inches long and a half-inch wide, with each surface **1** and **5** being about four inches wide. For inexpensive construction purposes, indeed, the surfaces **1** and **5** were formed as an angle iron with substantially a ninety-degree included angle α between the connected surfaces **1** and **5**. Even when the surface **5** was painted black to constitute the worst conditions of contamination thereof, on-off signal ratios in excess of 4-to-1 were reliably received.

In FIG. 3, a modified construction of U-shaped form is illustrated, in which the identification surface **1″**, slotted at **3″**, is mounted by a connecting surface **2** substantially parallel to, but spaced forward of, the reflecting surface **5″**.

It is not necessary, moreover, that the radiation pass through the slots of the identification surface after reflection from the reflecting surface of the tag, as in FIGS. 1 and 3. Thus, in FIG. 2, the radiation T from the source first passes through the slots **3′**, cut in from the outer edge of the identification surface **1′**, located on the transmitter side of the reflecting surface **5′**, and then reflects at P from the reflecting surface **5′** toward the receiver. A coded shadow distribution, corresponding to the presence and absence of slots **3′**, is thus formed upon the reflecting surface **5′**, as indicated by the shaded and unshaded regions, returning appropriate on-off signals along the reflected beam-path R to the receiver.

Clearly, as previously intimated, other types of radiation, including microwaves, and other configurations of apertures, slots, etc., may be employed by those skilled in the art; all such being considered to fall within the spirit and scope of the invention as defined in the appended claims.

What is claimed is:

1. An identification system for vehicles and the like which move along a predetermined course, comprising a radiation transmitter and a radiation receiver located at one side of said course, each of said vehicles having an identification member fixed thereto and exposed to the radiation from said transmitter, each of said members having an identification surface opaque to said radiation but provided with a series of code apertures arranged in

sequence along said course and having a radiation-reflecting surface fixed near the identification surface and oriented to reflect radiation from said transmitter to said receiver, said apertures being positioned in the path of said radiation received at said receiver by reflection from said reflecting surface as said vehicles move along said course past said transmitter and said receiver.

2. The system of claim 1, said apertures being positioned to pass the radiation from said transmitter before reflection from said reflecting surface.

3. The system of claim 1, said apertures being positioned to pass the radiation from said transmitter after reflection from said reflecting surface.

4. The system of claim 1, said apertures being parallel slots.

5. The system of claim 4, said slots being cut in from an edge of said identification surface.

6. The system of claim 1, said identification surface and said radiation-reflecting surface being disposed at an angle to one another less than 180 degrees.

7. The system of claim 6, said angle being substantially 90 degrees.

8. The system of claim 1, said identification surface and said reflecting surface being substantially parallel.

References Cited

UNITED STATES PATENTS

1,811,595	6/1931	Powers	88—75 X
1,832,196	11/1931	Ferguson	88—75 X
1,962,467	6/1934	Sholkin	250—219 X
2,287,965	6/1942	Borberg	250—219 X
2,482,242	9/1949	Brustman	250—219
2,581,552	1/1952	O'Hagan et al.	246—2
2,612,994	10/1952	Woodland et al.	250—223 X
2,769,922	11/1956	Peery	250—219
2,944,156	7/1960	Davy et al.	250—219
3,041,462	6/1962	Ogle	250—239 X
3,145,291	8/1964	Brainerd	250—219 X

WALTER STOLWEIN, *Primary Examiner.*

RALPH G. NILSON, *Examiner.*

M. A. LEAVITT, *Assistant Examiner.*