May 31, 1938. G. MINKOWITZ 2,119,111

BUTTONHOLE STITCHING ATTACHMENT

Filed Aug. 13, 1937

FIG. 1.

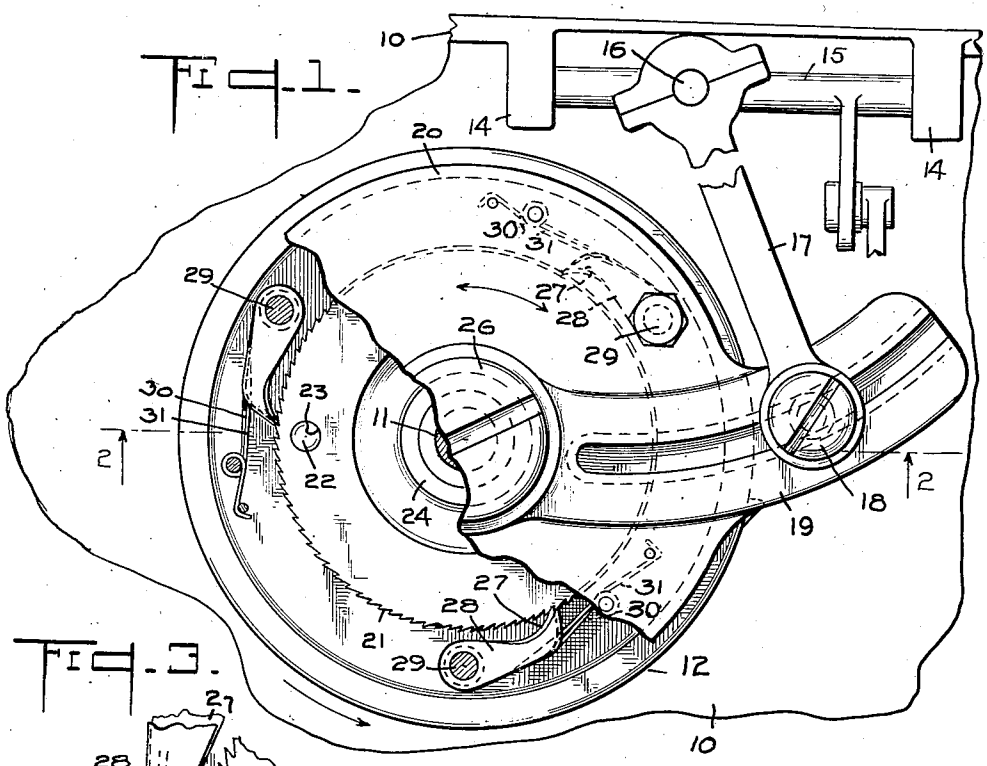

FIG. 3.

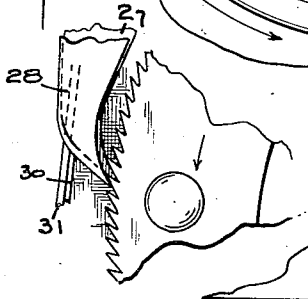

FIG. 2.

George Minkowitz
INVENTOR

BY

His ATTORNEY

Patented May 31, 1938 2,119,111

UNITED STATES PATENT OFFICE

2,119,111

BUTTONHOLE STITCHING ATTACHMENT

George Minkowitz, New York, N. Y.

Application August 13, 1937, Serial No. 158,851

1 Claim. (Cl. 74—142)

This invention relates to an intermittent rotary drive attachment for the feed wheel of a buttonhole sewing machine to provide for a maximum number of stitches and to insure an even distribution of the same in the making of buttonholes.

The present invention is particularly applicable to buttonhole sewing machines of the older types, e. g., such a machine as is illustrated in United States Letters Patent, No. 885,310, of which there are many thousands still in use.

Briefly, in the old type model no provision was made to govern the even distribution or spacing of stitches used in the forming of buttonholes. The unsatisfactory results obtained in these machines led eventually to the development of a new button hole machine illustrated in United States Letters Patent, No. 1,559,539. However, although the new machines were highly efficient for the purpose for which they were designed, still no provision was made to put the large number of old machines into satisfactory workable condition. This situation soon led to the construction of an attachment for these obsolete machines, which was applied to the feed wheel, and which consisted primarily of a slip clutch arrangement operated by the reciprocating arm formerly used to advance the feed wheel. The slip clutch members were relied upon to frictionally grip the feed wheel in one direction of movement and to disengage from the latter and to move back again in the opposite direction. While this device was an improvement over the original feed wheel drive it did not compare in efficiency with the positive drive adopted in the machine of patent, No. 1,559,539. The disadvantages of the slip clutch were many and among the most important, was the failure of the slip dogs to take hold and turn the feed wheel during their very slight movement, the movement being governed by the spacing between adjacent stitches forming the buttonhole. This, it is submitted, was due to the fact that oil often collected upon the wheel and if not removed it simply caused the clutch dogs to slip in both directions of their movement over the wheel with the result that the latter failed to be rotated at all.

Thus, the old machines again became useless and a glut upon the market until the conception of the present invention, which has for its object to provide an attachment for the feed wheel of button hole sewing machines, which without altering the original machines in any way is attachable to the feed wheel thereof, and which is capable of imparting to it and its shaft a positive intermittent rotary movement of any practical degree, no matter how small.

Inasmuch as it was contemplated to utilize the original feed wheel of the machine, means had to be devised to accommodate the attachment to the wheel and at the same time provide for a maximum number of intermittent movements being imparted thereto, because the maximum number of intermittent movements would normally be required to take care of buttonhole stitches, which are made with very fine thread, and which must be very closely and evenly spaced from one another.

A further object of this invention, therefore, is to provide a pawl and ratchet mechanism in which double pawls are used to alternately engage the teeth of the ratchet wheel, thereby making it possible to intermittently advance the feed wheel in steps equal to a fraction of the distance between ratchet teeth and to correspondingly space and evenly distribute the stitches in the making of a buttonhole.

The objects of this invention have been accomplished by means of a device, one embodiment of which is hereinafter described in detail, set forth in the appended claim and illustratively exemplified in the accompanying drawing, in which:

Figure 1 is a bottom plan view of the bed of a button hole sewing machine, showing the intermittent drive and feed wheel, parts of the drive being broken away to uncover otherwise hidden parts of the mechanism;

Figure 2 is a substantially longitudinal sectional view of the feed wheel and drive taken on line 2—2 of Figure 1; and

Figure 3 is a fragmentary view of the ratchet wheel and double pawl therefor.

Referring to the drawing, 10 denotes the bed plate of a sewing machine, of the buttonhole type represented by Patent No. 885,310, supporting a vertical feed shaft 11 upon the lower end of which the feed wheel 12 is secured. The longitudinal movement of the work holder and associated parts, not illustrated, are effected by the usual cam slots 13 in the upper face of the feed wheel 12. Mounted in bearings 14 within the bed 10 is a rock shaft 15 having a depending arm 16 from which a pitman connection 17 projects. The other end of the pitman is adjustably mounted by means of a set screw 18 with an arcuately curved slotted swinging arm 19, the arm forming an integral part of an oscillating disc plate 20 journalled on the feed shaft 11, beneath the feed cam wheel 12. Movement of the

arm 16 imparts an intermittent or step-by-step rotary movement to the feed wheel 12.

According to the present invention, intermittent movement is imparted to the feed wheel 12 and shaft 10, by means of an external ratchet wheel 21, which seats against the top wall of a recess in the underside of the feed wheel 12, and which is provided with a pin 22 adapted to be received in an opening 23 drilled in the wall forming the top of the recess. The pin 22 causes the intermittent rotary movement of the ratchet to be imparted to the feed wheel 11 and shaft 10. The ratchet 21 is provided with an axial hub 24 which fits over the hub of the feed wheel and which forms a bearing for the hub 25 of the disc plate 20. The assembled parts just described are held in position by means of a set screw 26.

In a mechanical device of this character, where it becomes necessary to impart a very great number of intermittent rotary movements to another part, the number of individual clutch teeth requires a relatively large circumference, because each tooth must be sufficiently deep and distanced far enough from the next tooth to provide ample working space for the ratchet engaging pawl. Inasmuch as the feed wheel 12 is a part of the buttonhole machine and must be used, the relatively small working space afforded by the wheel requires a special ratchet device which forms the novel feature of the present invention.

The ratchet wheel 21, as illustrated, is therefore provided with approximately one-half the number of teeth as compared with the maximum number of stitches required of the largest buttonhole in order to afford each tooth with sufficient depth and space to insure engagement by a double ratchet engaging member. I accomplish the problem of increasing the number of intermittent rotary movements for one complete rotation of the ratchet wheel over the number of teeth contained in its periphery, by dividing each ratchet member into two parts, comprising superimposed pawls 27 and 28, pivotally mounted on a stud shaft 29 carried upright by the disc plate 20 and yieldably urged at their free ends into engagement with the teeth of the ratchet wheel by means of springs 30 and 31, the width of the ratchet wheel being equal at least to the width of the two pawls. The inner pawl 27 is slightly shorter than the lower pawl 28 so as to enable one pawl to engage a tooth of the ratchet wheel while the other pawl is held out of engagement with the preceding or following tooth by approximately one-half the length of the latter. In other words, the rocking movement imparted to the arm 19 may be adjusted so as to require two forward movements thereof to move the ratchet and feed wheel a distance equal to one tooth, thus increasing, and, in fact, doubling, with relation to the number of ratchet teeth, the number of intermittent rotary movements which may be imparted to the feed wheel 11 and shaft 10 to one complete rotation thereof.

In order to insure positive movement of the feed wheel, there are three groups of double pawls 27—28 arranged in the recess of the wheel 12 peripherally of the ratchet wheel 21, each group being exactly alike and operating upon the teeth of the ratchet in the same order.

In operation, the shaft 15 is set in motion and the rocking movement of the arm 16 causes the pitman 17 to reciprocate. Adjusted in proper relative position on the arm 19, the pitman 17 sets up an oscillating rotary movement in the disc plate 20, which carries the three groups of double pawls 27 and 28. As the disc 20 oscillates in the direction of the arrow in Figure 1, the longer pawls 27, engaged in the teeth of the ratchet wheel 21 will step the latter and feed wheel 12 ahead a distance corresponding to the relative position of the pitman connection with the arm 19 and the axis of the feed shaft 11. If adjustment is such as to make the oscillating movement very short, i. e. a minimum distance equal to one-half the distance between ratchet teeth, then the lower or shorter pawls 28 will engage the next teeth and the longer pawls 27 will rest on the upper slopes of the adjacent teeth and during the next movement ahead of the arm 19 and plate 20 the shorter pawls 28 will take their turn at stepping the ratchet wheel 21 and feed wheel 12 ahead. Thus, it is possible to at least double the number of intermittent rotary movements imparted to a ratchet wheel over the number of ratchet teeth thereof. With the greatly increased number of positively spaced intermittent rotary movements, taken by the feed wheel 12 and shaft 11, according to the present invention, the greater will be the number and distribution of buttonhole stitches which may be effected in the making of buttonholes.

What is claimed as new is:—

In a buttonhole stitching attachment a driving mechanism for intermittently rotating a shaft comprising a driven disc fixed on said shaft, said disc having a hub portion projecting axially to the end of the shaft and an integral axially projecting circumferential flange, a ratchet wheel of a diameter smaller than the inner diameter of said flange, disposed within said flange on the hub of said driven disc and rigidly connected with the latter, said ratchet wheel having a hub portion projecting beyond the hub of the driven disc and the end of the shaft and being internally threaded, an oscillating carrier disc of a diameter exceeding the inner diameter of said flange and being rotatably arranged on the projecting hub portion of said ratchet wheel, said oscillating disc carrying circumferentially spaced pawls yieldably engaging the teeth of said ratchet wheel to impart thereto and to the driven member an intermittent rotary movement in one direction, and a set screw having a head overlapping the bore of said carrier disc and being screwed into said threaded hub portion of the ratchet wheel to hold said carrier disc in contact with said flange whereby said pawl and ratchet mechanism is tightly enclosed in a casing formed by the carrier disc, the driven disc and the circumferential flange of the latter.

GEORGE MINKOWITZ.