Feb. 22, 1955 W. G. NUTTLE 2,702,626

TOOL CARRIER

Filed Oct. 10, 1952 2 Sheets-Sheet 1

FIG. 1.

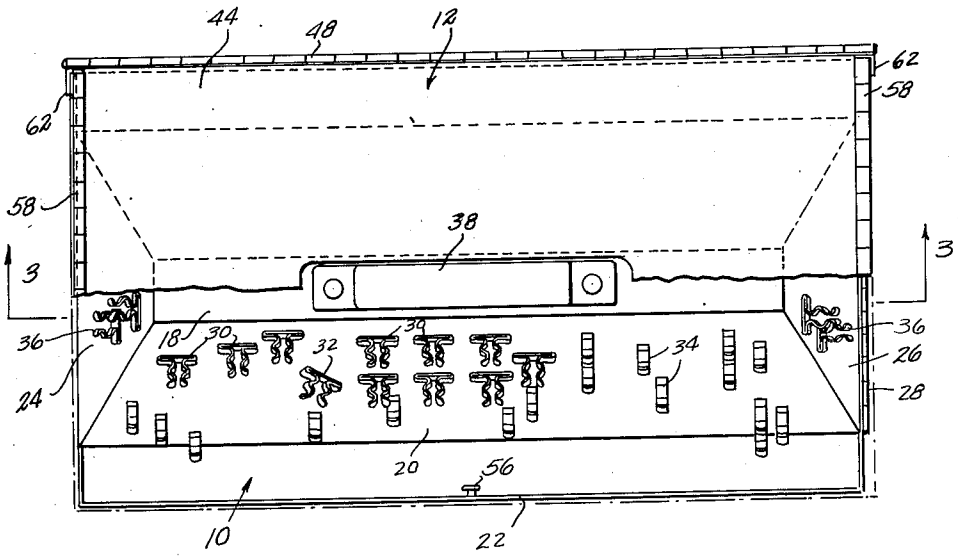

FIG. 2.

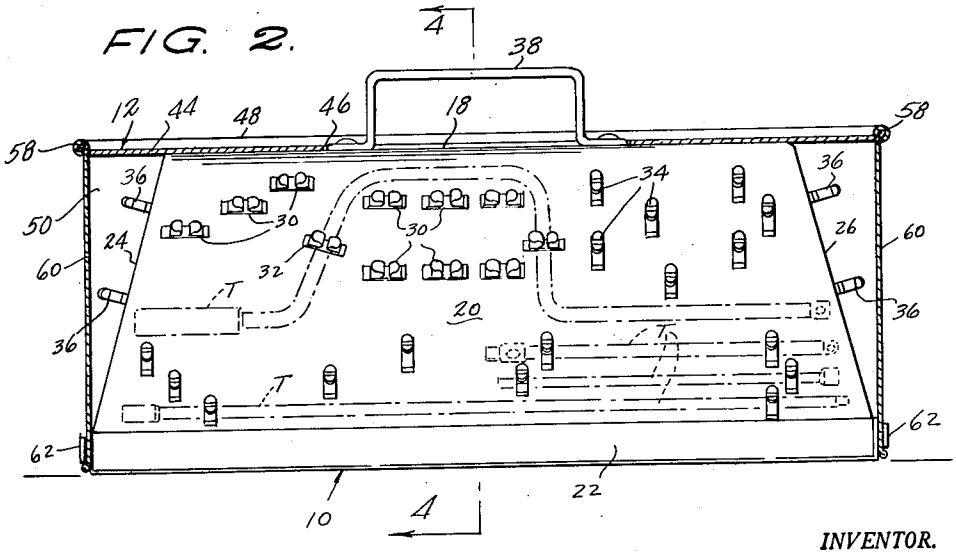

INVENTOR.
WILLIAM G. NUTTLE,
BY

McMorrow, Berman & Davidson
ATTORNEYS

Feb. 22, 1955 W. G. NUTTLE 2,702,626

TOOL CARRIER

Filed Oct. 10, 1952 2 Sheets-Sheet 2

FIG. 3.

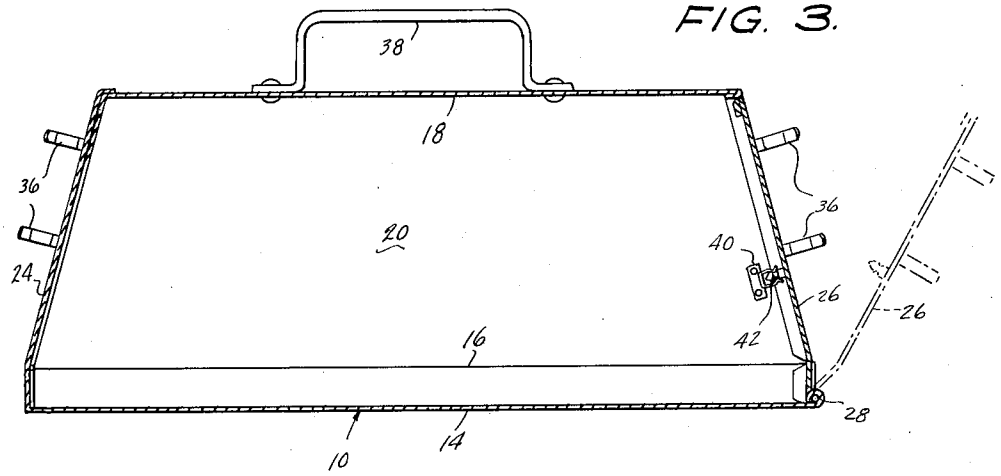

FIG. 4.

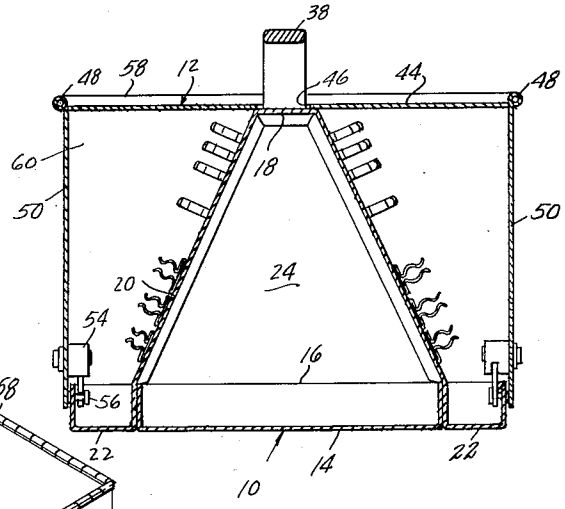

FIG. 5.

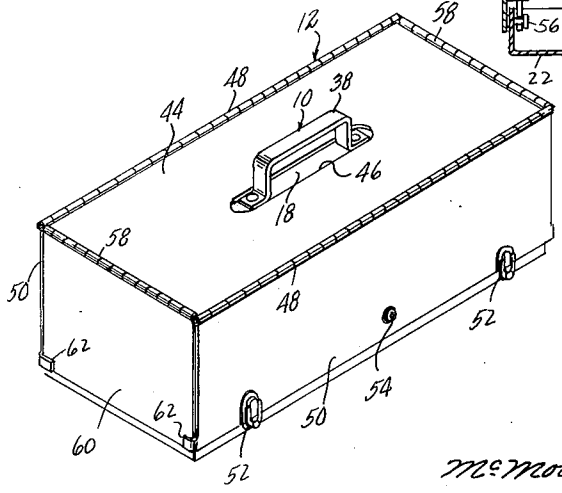

INVENTOR.
WILLIAM. G. NUTTLE,
BY
McMorrow, Berman + Davidson
ATTORNEYS.

United States Patent Office 2,702,626 Patented Feb. 22, 1955

2,702,626

TOOL CARRIER

William G. Nuttle, Joplin, Mo.

Application October 10, 1952, Serial No. 314,099

2 Claims. (Cl. 206—16)

This invention relates to a carrier or support adapted particularly for the storage, display, and transportation of various types of hand tools.

It is of prime importance that a workman, whose duties require the regular usage of any one of a substantial number of hand tools, be able to carry with him a maximum number of said tools, thus to be assured of a complete set thereof wherever work is to be performed.

Heretofore, tool boxes or carriers have been devised, intended to carry a substantial number of tools, and while these have proved satisfactory in many instances, they still leave much to be desired, particularly with respect to supporting the tools in such a manner as will insure that any selected tool will be readily accessible and fully visible.

The main object of the present invention, accordingly, is to provide a generally improved tool carrier that will be designed in a novel manner, calculated to eliminate the deficiencies noted in more conventional tool carriers.

Another object, of a more specific nature, is to provide a tool carrier which will be designed in such a way as to permit a casual inspection to be wholly sufficient, when one is determining whether all the tools of a set are racked within the carrier.

Another object is to provide a tool carrier that will be adaptable for use by any of various workmen, such as automobile mechanics, tinsmiths, carpenters, electricians, plumbers, etc.

Yet another object is to provide a tool carrier as stated the design of which will be such as to cause all the tools to be racked upon a main cabinet, both interiorly and exteriorly thereof, with the supported tools being protectively enclosed by a readily removable cover so formed as to permit access to any panel of the cabinet, or to the entire cabinet, as desired.

Other objects will appear from the following description, the claims appended thereto, and from the annexed drawings, in which like reference characters designate like parts throughout the several views, and wherein:

Figure 1 is a top plan view of a tool carrier formed in accordance with the present invention, a portion of the removable cover being broken away;

Figure 2 is a longitudinal sectional view through the carrier, in which the cabinet remains in side elevation;

Figure 3 is a longitudinal sectional view through the cabinet taken on line 3—3 of Figure 1;

Figure 4 is a transverse sectional view on line 4—4 of Figure 2; and

Figure 5 is a perspective view on a reduced scale of the assembled carrier.

A tool carrier formed in accordance with the present invention can be appropriately considered as comprising two main units, namely a cabinet designated generally by the reference numeral **10**, and a removable cover designated generally at **12**. The cabinet is adapted to support, both interiorly and exteriorly thereof, a plurality of hand tools T, the cover being adapted to protectively enclose the cabinet and the supported tools. Each of these two main units will be described in turn.

Considering first the construction of the cabinet **10**, said cabinet is formed with upwardly converging side panels and upwardly converging end panels, and in a commercial embodiment of the invention, can be formed almost entirely from a single piece of sheet metal material, readily blanked out and formed to the desired finished shape. Apart from said piece of sheet metal, the cabinet includes a tray-like bottom and a hinged end panel.

The bottom of the cabinet has been designated by the reference numeral **14**, and is of flat, rectangular configuration, with an integral, upwardly extended, peripheral flange **16**.

The above mentioned piece of sheet metal material is formed with a relatively narrow top panel **18**, said top panel being extended in parallelism with and above the bottom **14**. The top panel, as may be readily noted from Figure 3, is somewhat shorter in length than the bottom **14**, and is integral, along its respective side edges, with side panels **20**. The side panels diverge downwardly from the top panel, toward the opposite side edges of the flanged bottom **14**. At their lower edges, the side panels are integrally formed with elongated, relatively narrow, side trays **22** coextensive in length with the bottom **14**. The side trays are particularly adapted to hold selected socket wrenches and similar tools, not shown. Of course, the side trays could be compartmented if desired, in various commercial embodiments of the invention.

At one end, the bottom **14** is integral with a fixed end panel **24**, said end panel having upwardly converging side edges secured fixedly in any suitable manner to the adjacent end edges of the side panels **20**. The end panel **14** is fixedly secured at its upper end to the adjacent end of the top panel **18**.

At the other end of the carrier, there is provided an access door **26**, pivotally connected along its lower edge by a piano hinge **28** to the end edge of the bottom **14**, for swinging movement about an axis extending transversely of the bottom at said end edge thereof. The door **26** is like the panel **24** in outer configuration, having upwardly converging side edges abutting against the adjacent end edges of the side panels **20** in the closed position of the door. The door can be swung to an open position shown in dotted lines in Figure 3, to provide access to the interior of the cabinet, in which a substantial number of tools and supplies can be stored. A shelf (not shown) can be mounted within the cabinet, substantially midway between the bottom **14** and the top panel **18**, if desired, to increase the storage capacity of the cabinet.

As will be noted from Figure 3, the end panel **24** and the hinged access door **26** converge upwardly from the bottom **14**.

To the outer surfaces of the respective side panels **20**, I attach a plurality of spring clips **30**, disposed horizontally so as to support selected tools, such as socket wrench handles, etc., in vertical positions. Other clips **32** can be arranged vertically, so as to support selected tools, tool handles, and tool shanks in horizontal positions.

On the outer surfaces of the end panel **24** and door **26**, tool support clips **36** are mounted, so as to increase the rack capacity of the carrier.

A handle **38**, formed from a length of bar material fashioned to the shape of an inverted U, is riveted or otherwise fixedly attached to, and extends upwardly from, the midlength portion of the top panel, so as to permit the entire carrier to be readily transported from place to place by the worker.

It is desirable, of course, that the door be held releasably in closed position, and any of various well known latch devices can be used for this purpose. I prefer to use a latch means such as that illustrated in Figure 3, wherein there is shown a spring metal keeper **40** affixed to one of the side panels **20**, said keeper being adapted to receive and releasably grip a prong **42** secured to the inner surface of the door **26**.

The removable cover **12** will now be described, said cover being of rectangular, box-like configuration and being adapted, when mounted upon the cabinet **10**, to completely enclose the same, thus to protectively overlie the several tools racked upon the cabinet.

The cover includes a horizontal, rectangular, flat top wall **44** having a center opening **46** shaped to receive and fit snugly about the handle **38**. Extending along the opposite side edges of the top wall are elongated piano hinges **48** coextensive in length with said top wall, said hinges serving to connect a pair of depending side walls **50** pivotally to the opposite side edges of the cover. The side walls, in their normal, inwardly swung positions illustrated in the drawings, extend vertically from the hinges **48**, toward the outer side edges of the trays **22**, and to

releasably engage the side walls with said trays I propose to use conventionally formed latch devices **52** (Figure 5) having cooperating portions carried by the trays **22** and side walls **50** respectively. A lock **54** is carried by each of the respective side walls, and is engageable with a lock pin **56** mounted within each tray **22**.

At the opposite ends of the top wall **44**, there are provided piano hinges **58**, utilized to hinge a pair of depending end walls **60** to the top wall. The end walls **60** extend vertically from the end hinges **58**, when they are in their normal positions, and are held against outward swinging by ears **62** integrally formed upon the opposite ends of the respective side walls **50** of the cover **12**.

As will be noted from the construction illustrated and described, the cabinet formation is such as to cause all the exteriorly racked tools T to be neatly and compactly supported upon the inclined sides and ends of the cabinet, in such a way as to insure that all the tools will be readily accessible to and fully visible by a user. A casual inspection will be sufficient, as is apparent, to determine whether a full complement of tools is supported upon the cabinet **10**, and thus, the loss or misplacement of tools will be eliminated or at least reduced to a material extent.

Further, it is considered to be an important characteristic of the invention that the removable cover, when mounted upon the cabinet, is releasably latched to the cabinet in such a manner as to form the entire carrier into a rigid assembly, said cover being so formed as to protectively enclose all the tools and prevent the loss thereof. It will be apparent that the use of vertically disposed side and end walls upon the cover, in conjunction with inclined side and end panels diverging downwardly from the top panel, defines spaces throughout the periphery of the cabinet in which the enclosed tools will be supported, regardless of the shapes and sizes of the tools. The supported tools will, of course, be held against accidental loss, since the cover closes said spaces in the plane of the bottom wall **14**, thus to insure against the loss of tools even if the tools are jarred loose accidentally from their associated clips.

Another feature deemed to be of importance resides in the adaptability of the cover for exposing selected tool support panels of the cabinet without requiring complete removal of the cover. Thus, one might desire to remove a tool supported upon one of the side panels **20**. In this event, one side wall **50** can be swung outwardly. Should a tool be needed from the other side panel, the other side wall **50** can be swung outwardly.

It is believed apparent that the invention is not necessarily confined to the specific use or uses thereof described above, since it may be utilized for any purpose to which it may be suited. Nor is the invention to be necessarily limited to the specific construction illustrated and described, since such construction is only intended to be illustrative of the principles of operation and the means presently devised to carry out said principles, it being considered that the invention comprehends any minor change in construction that may be permitted within the scope of the appended claims.

What is claimed is:

1. A tool carrier comprising: a cabinet formed as a hollow, upwardly tapering box including a handle at its upper end and adapted for the support of a plurality of hand tools thereon; a cover for said box formed as a rectangular, box-like enclosure having an open bottom and having a flat top wall apertured centrally for extension of the handle therethrough, said cover including side and end walls hinged to the sides and ends of the top wall and normally depending vertically from the top wall to protectively enclose said cabinet; and latch means interengaging releasably between the cabinet and said side walls of the cover.

2. A tool carrier comprising: a cabinet formed as a hollow, upwardly tapering box including a handle at its upper end and adapted for the support of a plurality of hand tools thereon; a cover for said box formed as a rectangular, box-like enclosure having an open bottom and having a flat top wall apertured centrally for extension of the handle therethrough, said cover including side and end walls hinged to the sides and ends of the top wall and normally depending vertically from the top wall to protectively enclose said cabinet; latch means interengaging releasably between the cabinet and said side walls of the cover; and ears formed upon opposite ends of the respective side walls and embracing the end walls to hold the same in said vertical positions thereof.

References Cited in the file of this patent

UNITED STATES PATENTS

234,778	Hocker	Nov. 23, 1880
1,268,124	Jennings	June 4, 1918
1,447,145	Morell	Feb. 27, 1923
1,510,240	Myers	Sept. 30, 1924
1,639,227	Lawrence	Aug. 16, 1927
2,405,955	Hunt	Aug. 20, 1946
2,515,876	Kauffman	July 18, 1950
2,603,549	Tessmer et al.	July 15, 1952