(12) INTERNATIONAL APPLICATION PUBLISHED UNDER THE PATENT COOPERATION TREATY (PCT)

(19) World Intellectual Property Organization
International Bureau

(43) International Publication Date
7 July 2016 (07.07.2016)

WIPO | PCT

(10) International Publication Number
WO 2016/108613 A1

(51) International Patent Classification:
H01H 33/28 (2006.01) *H01H 33/42* (2006.01)

(21) International Application Number:
PCT/KR2015/014474

(22) International Filing Date:
30 December 2015 (30.12.2015)

(25) Filing Language: English

(26) Publication Language: English

(30) Priority Data:
10-2014-0193568
30 December 2014 (30.12.2014) KR

(71) Applicant: **HYOSUNG CORPORATION** [KR/KR]; Mapo-daero 119, Mapo-gu, Seoul 04144 (KR).

(72) Inventors: **WOO, Dong Kyun**; #101-107, 13, Digital-ro 69-gil, Yeongdeungpo-gu, Seoul 07429 (KR). **KO, Jae Hyeong**; #207-1203, 35, Dodeokgongwon-ro, Gwangmyeong-si, Gyeonggi-do 14253 (KR).

(74) Agent: **SU INTELLECTUAL PROPERTY**; (Yeoksam-dong, K&Y Bldg.) 6Fl., 34, Gangnam-daero 94-gil, Gangnam-gu, Seoul 06134 (KR).

(81) Designated States *(unless otherwise indicated, for every kind of national protection available)*: AE, AG, AL, AM, AO, AT, AU, AZ, BA, BB, BG, BH, BN, BR, BW, BY, BZ, CA, CH, CL, CN, CO, CR, CU, CZ, DE, DK, DM, DO, DZ, EC, EE, EG, ES, FI, GB, GD, GE, GH, GM, GT, HN, HR, HU, ID, IL, IN, IR, IS, JP, KE, KG, KN, KP, KZ, LA, LC, LK, LR, LS, LU, LY, MA, MD, ME, MG, MK, MN, MW, MX, MY, MZ, NA, NG, NI, NO, NZ, OM, PA, PE, PG, PH, PL, PT, QA, RO, RS, RU, RW, SA, SC, SD, SE, SG, SK, SL, SM, ST, SV, SY, TH, TJ, TM, TN, TR, TT, TZ, UA, UG, US, UZ, VC, VN, ZA, ZM, ZW.

(84) Designated States *(unless otherwise indicated, for every kind of regional protection available)*: ARIPO (BW, GH, GM, KE, LR, LS, MW, MZ, NA, RW, SD, SL, ST, SZ, TZ, UG, ZM, ZW), Eurasian (AM, AZ, BY, KG, KZ, RU, TJ, TM), European (AL, AT, BE, BG, CH, CY, CZ, DE, DK, EE, ES, FI, FR, GB, GR, HR, HU, IE, IS, IT, LT, LU,

[Continued on next page]

(54) Title: FAST SWITCH DEVICE

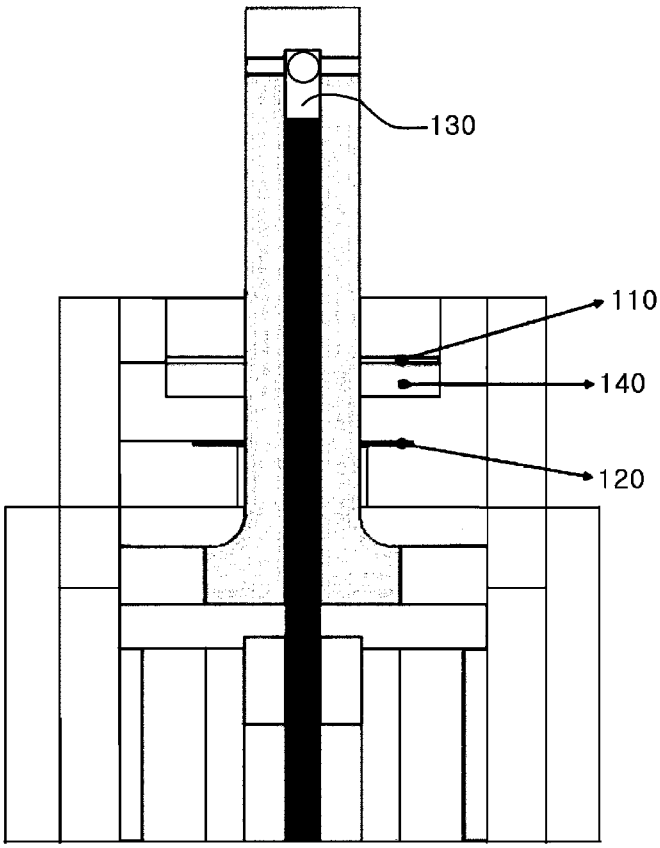

(57) Abstract: Disclosed is a fast switch device including: a reactor that moves to an open position where the switch is opened and a close position where the switch is closed; an open coil portion that drives the reactor to the open position by virtue of an eddy current component; a close coil portion that drives the reactor the close position by virtue of an eddy current component; and a controller that performs control such that an electric current is applied to the close coil portion oppositely to a direction of an electric current flowing through the open coil portion in order to brake the reactor during an open operation for driving the reactor to the open position, and an electric current is applied to the open coil portion oppositely to a direction of an electric current flowing through the close coil portion.

WO 2016/108613 A1

LV, MC, MK, MT, NL, NO, PL, PT, RO, RS, SE, SI, SK, SM, TR), OAPI (BF, BJ, CF, CG, CI, CM, GA, GN, GQ, GW, KM, ML, MR, NE, SN, TD, TG).

Published:

— *with international search report (Art. 21(3))*

Description

Title of Invention: FAST SWITCH DEVICE

Technical Field

[1] The present invention relates to a fast switch device, and more particularly, to a vacuum circuit breaker and its operational mode, employed in a fast switch of a DC circuit breaker using a Thomson coil actuator.

Background Art

[2] A voltage-sourced conversion technology recently highlighted in high voltage direct-current (HVDC) transmission systems has a lot of advantages in the design of multi-terminal networks, compared to the conventional current source converters employed in the prior art.

[3] As the voltage-sourced conversion technology advances, establishment of the HVDC multi-terminal network was facilitated, and a smart grid plan for a distributed renewable energy network was expedited. For this purpose, it is necessary to address technical problems in a DC circuit breaker for protecting transmission lines in advance.

[4] Unlike the conventional DC circuit breakers, the voltage-sourced conversion technology requires low-loss and fast switching characteristics. Therefore, a hybrid circuit breaker was developed, in which mechanical conversion for satisfying a low-loss requirement and power-semiconductor-based electrical conversion for satisfying a fast switching requirement are combined.

[5] As well known in the art, the fast switch is an electric power device adapted to switch between open and close positions in a high speed to cut off an abnormal current such as a short-circuit current or close a circuit rapidly.

[6] Such a fast switch is operated in a very high speed, for example, within several milliseconds or several tens of milliseconds. As a result, it is possible to minimize an electric arc accident that may be generated during a circuit open/close operation and reduce damage to power devices such as a distributor panel by rapidly cutting off an abnormal current.

[7] FIG. 1 is a cross-sectional view illustrating a fast switch of the prior art.

[8] Referring to FIG. 1, a high-speed closing switch 100 has a first electrode 10 inside a casing 200 that forms external appearance and a second electrode 20 that faces the first electrode 10 over the first electrode 10. The first electrode 10 has an internal through-hole 14, and the second electrode 20 has a receiving recess 24 facing the through-hole 14.

[9] The high-speed closing switch 100 further has a movable contact member 30 vertically movably housed inside the through-hole 14 of the first electrode 10. As the

movable contact member 30 moves upward and is received by the receiving recess 24 of the second electrode 20, the outer circumferential surface of the movable contact member 30 adjoins with the inner circumferential surface of the through-hole 14, and the outer circumferential surface of the movable contact member 30 adjoins with the inner circumferential surface of the receiving recess 24. As a result, the first and second electrodes are electrically connected to each other.

[10] In the prior art, a damping force is applied to a damping hole in order to absorb an impact on the contact when the operation is completed. However, in the prior art, since wear or damage is generated due to a mechanical motion, it is inevitable to perform maintenance disadvantageously.

Disclosure of Invention

Technical Problem

[11] In view of the aforementioned problems, this disclosure has been made to provide a fast switch device capable of implementing electrical braking by obtaining a braking force from an eddy current component of the reactor and an external voltage stored in a capacitor.

Solution to Problem

[12] The object of the present invention is not limited to those described above, and a person skilled in the art would apparently appreciate other objects by reading the following description.

[13] According to an aspect of this disclosure, there is provided a fast switch device including: a reactor that moves to an open position where the switch is opened and a close position where the switch is closed; an open coil portion that drives the reactor to the open position by virtue of an eddy current component; a close coil portion that drives the reactor the close position by virtue of an eddy current component; and a controller that performs control such that an electric current is applied to the close coil portion oppositely to a direction of an electric current flowing through the open coil portion in order to brake the reactor during an open operation for driving the reactor to the open position, and an electric current is applied to the open coil portion oppositely to a direction of an electric current flowing through the close coil portion in order to brake the reactor during a close operation for driving the reactor to the close position.

[14] In the fast switch device described above, the open coil portion may have a first Thomson coil and a first capacitor connected to the first Thomson coil in parallel, and the open coil portion may cause an electric current to flow to the first Thomson coil by using a voltage stored in the first capacitor to drive the reactor toward the open position by virtue of an eddy current component induced by the electric current flowing through the first Thomson coil.

[15] In the fast switch device described above, the close coil portion may have a second Thomson coil and a second capacitor connected to the second Thomson coil in parallel, and the close coil portion may cause an electric current to flow to the second Thomson coil by using a voltage stored in the second capacitor to drive the reactor toward the close position by virtue of an eddy current component induced by the electric current flowing through the second Thomson coil.

[16] The fast switch device described above may further include a first armature plate that is connected to the reactor and generates a driving force by virtue of an eddy current as a magnetic flux is generated in the first Thomson coil.

[17] The fast switch device described above may further include a second armature plate that is connected to the reactor and generates a driving force by virtue of an eddy current as a magnetic flux is generated in the second Thomson coil.

[18] In the fast switch device described above, the controller may determine a timing of applying the electric current for braking the reactor based on a position of the reactor and a current rise time of the electric current flowing through the open coil portion or the close coil portion.

[19] In the fast switch device described above, the controller may perform control such that the electric current for braking the reactor is cut off as the open operation or the close operation is completed.

Advantageous Effects of Invention

[20] According to this disclosure, by decelerating the reactor on an electrical basis, it is possible to reduce an impact received by the contact due to a rapid movement speed of the contact when the operation is completed.

[21] In addition, according to this disclosure, it is possible to satisfy a speed requirement in an effective interval where the breaking performance of the circuit breaker is determined, and reduce the speed only when the operation is completed.

[22] Furthermore, according to this disclosure, the braking is implemented in a non-contact manner. Therefore, it is possible to eliminate necessity of maintenance that was required in a mechanical brake device.

Brief Description of Drawings

[23] FIG. 1 is a cross-sectional view illustrating a fast switch of the prior art;

[24] FIG. 2 is a cross-sectional view illustrating a fast switch device according to an embodiment of this disclosure; and

[25] FIG. 3 is a circuit diagram illustrating a fast switch device according to an embodiment of this disclosure.

Mode for the Invention

[26] Since the present invention may be modified or embodied in various forms,

particular embodiments will be described in detail with reference to the accompanying drawings. However, it should be noted that they are not intended to limit the invention, but include all possible all possible modifications, equivalents, and substitutes within the scope and spirit of the present invention.

[27] The terminologies used herein are only for the purpose of describing particular embodiments and are not intended to limit the invention. As used herein, the singular forms "a", "an" and "the" may be intended to include the plural forms as well, unless the context clearly indicates otherwise. It is further to be noted that, as used herein, the terms "comprises", "comprising", "include", and "including" indicate the presence of stated features, integers, steps, operations, units, and/or components, but do not preclude the presence or addition of one or more other features, integers, steps, operations, units, and/or components, and/or combination thereof.

[28] Unless specified otherwise, all terminologies used herein, including technical and scientific terminologies, have the same meaning as those understood generally by a person skilled in art. Terminologies defined in a general dictionary are to be construed as the same meanings as those understood in the context of the related art. Unless specified clearly herein, they are not construed as ideal or excessively formal meanings.

[29] It is noted that like reference numerals denote like elements throughout overall drawings. In addition, descriptions of well-known apparatus and methods may be omitted so as to not obscure the description of the representative embodiments, and such methods and apparatus are clearly within the scope and spirit of the present disclosure.

[30]

[31] FIG. 2 is a cross-sectional view illustrating a fast switch device according to an embodiment of this disclosure. FIG. 3 is a circuit diagram illustrating a fast switch device according to an embodiment of this disclosure.

[32] Referring to FIGS. 2 and 3, a fast switch device according to this disclosure has a reactor 130, an open coil portion 110, a close coil portion 120, a first armature plate 140, a second armature plate 150, and a controller.

[33] The open coil portion 110 is a coil circuit element for driving the reactor 130 toward an open position by using an eddy current.

[34] The close coil portion 120 is a coil circuit element for driving the reactor 130 toward a close position by using an eddy current.

[35] The controller performs control such that the reactor 130 is braked by applying an electric current to the close coil portion 120 oppositely to the current flowing to the open coil portion 110 during an open operation for driving the reactor 130 toward the open position. In addition, the controller performs control such that the reactor 130 is

braked by applying an electric current oppositely to the current flowing to the close coil portion 120 to the open coil portion 110 during a close operation for driving the reactor 130 toward the close position.

[36] The open coil portion 110 has a first Thomson coil and a first capacitor C_op connected to the first Thomson coil in parallel.

[37] The open coil portion 110 causes an electric current to flow to the first Thomson coil by virtue of the voltage stored in the first capacitor C_op to drive the reactor 130 toward the open position by using an eddy current component induced by the current flowing through the first Thomson coil.

[38] The close coil portion 120 has a second Thomson coil and a second capacitor C_cl connected to the second Thomson coil in parallel. The close coil portion 120 according to an embodiment of this disclosure does not affect performance of the circuit breaker. Therefore, it is preferable that the close coil portion 120 be designed to reduce the number of turns and the resistance of the coil in order to instantaneously apply a strong braking force to the reactor 130 by increasing a current rise rate.

[39] The close coil portion 120 causes an electric current to flow to the second Thomson coil by virtue of the voltage stored in the second capacitor C_cl to drive the reactor 130 toward the close position by using eddy current component induced by the current flowing through the second Thomson coil.

[40] The first armature plate 140 is connected to the reactor 130. As a magnetic flux is generated in the first Thomson coil, a driving force is generated by the eddy current.

[41] The second armature plate 150 is connected to the reactor 130. As a magnetic flux is generated in the second Thomson coil, a driving force is generated by the eddy current.

[42] According to this disclosure, the controller determines a timing for applying the electric current for braking the reactor 130 based on a position of the reactor 130 and a current rise time of the current flowing through the open coil portion 110 or the close coil portion 120.

[43] As the open operation or the close operation is completed, the controller performs control such that the electric current for braking the reactor 130 is cut off, and the reactor 130 is not bound.

[44] As described above, according to this disclosure, an electric current is applied to the close coil portion 120 oppositely to the direction of the current flowing through the open coil portion 110 to decelerate the reactor 130 while the current flows through the open coil portion 110 in order to place the reactor 130 in the open position. As a result, it is possible to reduce an impact received by the contact when the open operation is completed.

[45] In comparison, according to this disclosure, an electric current is applied to the open coil portion 110 oppositely to the direction of the current flowing through the close coil

portion 120 to decelerate the reactor 130 while the current flows through the close coil portion 120 in order to place the reactor 130 in the close position. As a result, it is possible to reduce an impact received by the contact when the close operation is completed.

[46] As described above, according to this disclosure, the open coil portion 110 and the close coil portion 120 serve as both a driver for driving the reactor 130 and a brake for braking the reactor 130.

[47] According to this disclosure, since driving and braking of the reactor 130 is controlled electrically, it is not necessary to perform maintenance that may be necessary in a mechanical brake system due to wear or damage.

[48] Although exemplary embodiments of the present invention have been shown and described hereinbefore, it will be apparent to those having ordinary skill in the art that a number of changes, modifications, or alterations to the invention as described herein may be made, none of which depart from the spirit of the present invention. All such changes, modifications and alterations should therefore be seen as within the scope of the present invention.

[49]

[50] * Reference Signs and Numerals

[51] 110open coil portion

[52] 120close coil portion

[53] 130reactor

[54] 140first armature plate

[55] 150second armature plate

Industrial Applicability

[56] The present invention relates to a fast switch device, and is applicable in the field of switch device.

Claims

[Claim 1] A fast switch device comprising:
a reactor that moves to an open position where the switch is opened and a close position where the switch is closed;
an open coil portion that drives the reactor to the open position by virtue of an eddy current;
a close coil portion that drives the reactor the close position by virtue of an eddy current; and
a controller that performs control such that an electric current is applied to the close coil portion oppositely to a direction of an electric current flowing through the open coil portion in order to brake the reactor during an open operation for driving the reactor to the open position, and an electric current is applied to the open coil portion oppositely to a direction of an electric current flowing through the close coil portion in order to brake the reactor during a close operation for driving the reactor to the close position.

[Claim 2] The fast switch device according to claim 1, wherein the open coil portion has a first Thomson coil and a first capacitor connected to the first Thomson coil in parallel, and
the open coil portion causes an electric current to flow to the first Thomson coil by using a voltage stored in the first capacitor to drive the reactor toward the open position by virtue of an eddy current induced by the electric current flowing through the first Thomson coil.

[Claim 3] The fast switch device according to claim 1, wherein the close coil portion has a second Thomson coil and a second capacitor connected to the second Thomson coil in parallel, and
the close coil portion causes an electric current to flow to the second Thomson coil by using a voltage stored in the second capacitor to drive the reactor toward the close position by virtue of an eddy current component induced by the electric current flowing through the second Thomson coil.

[Claim 4] The fast switch device according to claim 2, further comprising a first armature plate that is connected to the reactor and generates a driving force by virtue of an eddy current component as a magnetic flux is generated in the first Thomson coil.

[Claim 5] The fast switch device according to claim 3, further comprising a second armature plate that is connected to the reactor and generates a

driving force by virtue of an eddy current as a magnetic flux is generated in the second Thomson coil.

[Claim 6] The fast switch device according to claim 1, wherein the controller determines a timing of applying the electric current for braking the reactor based on a position of the reactor and a current rise time of the electric current flowing through the open coil portion or the close coil portion.

[Claim 7] The fast switch device according to claim 1, wherein the controller performs control such that the electric current for braking the reactor is cut off as the open operation or the close operation is completed.

[Fig. 1]

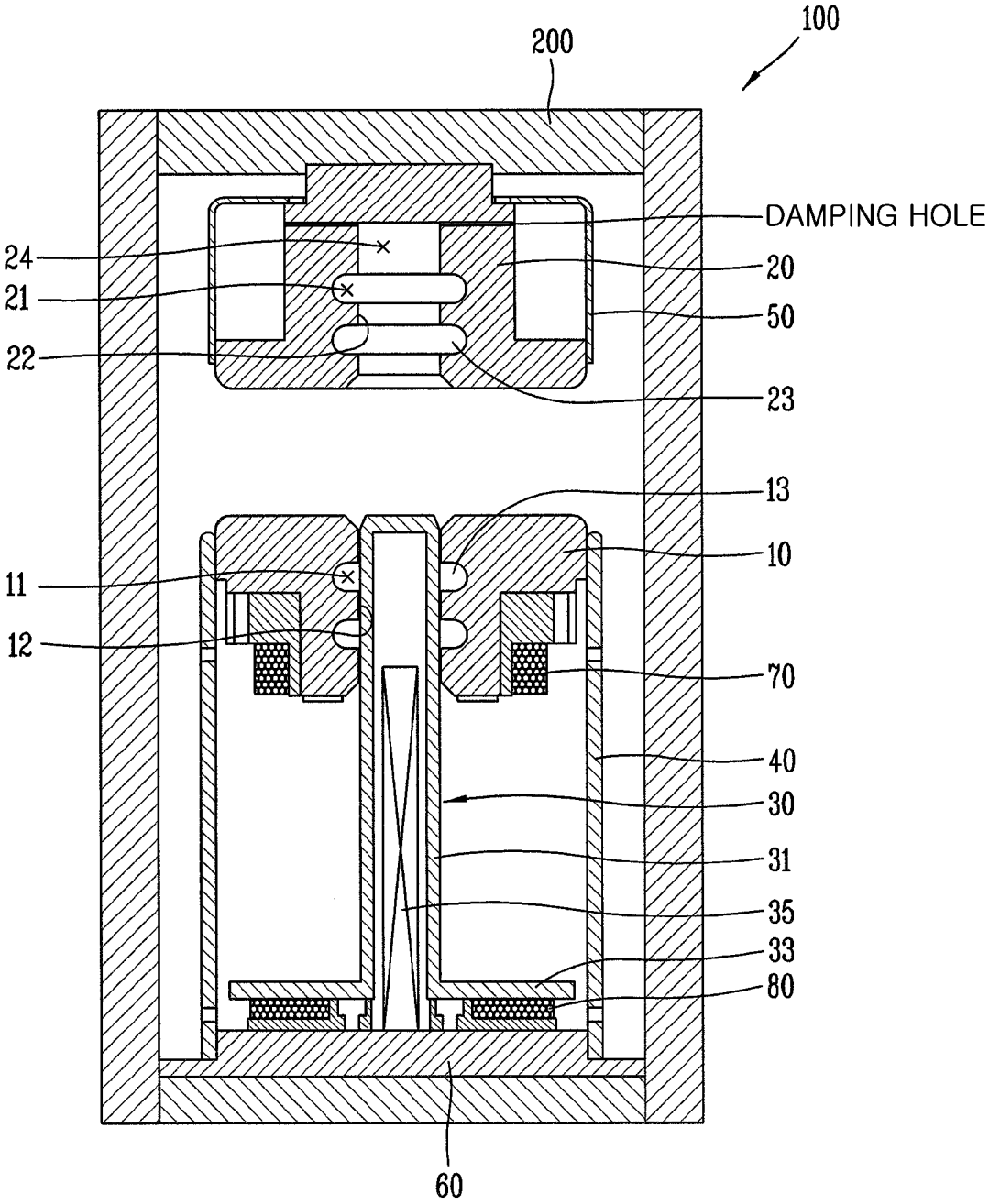
100
200
DAMPING HOLE
24
21
22
20
50
23
13
10
11
12
70
40
30
31
35
33
80
60

[Fig. 2]

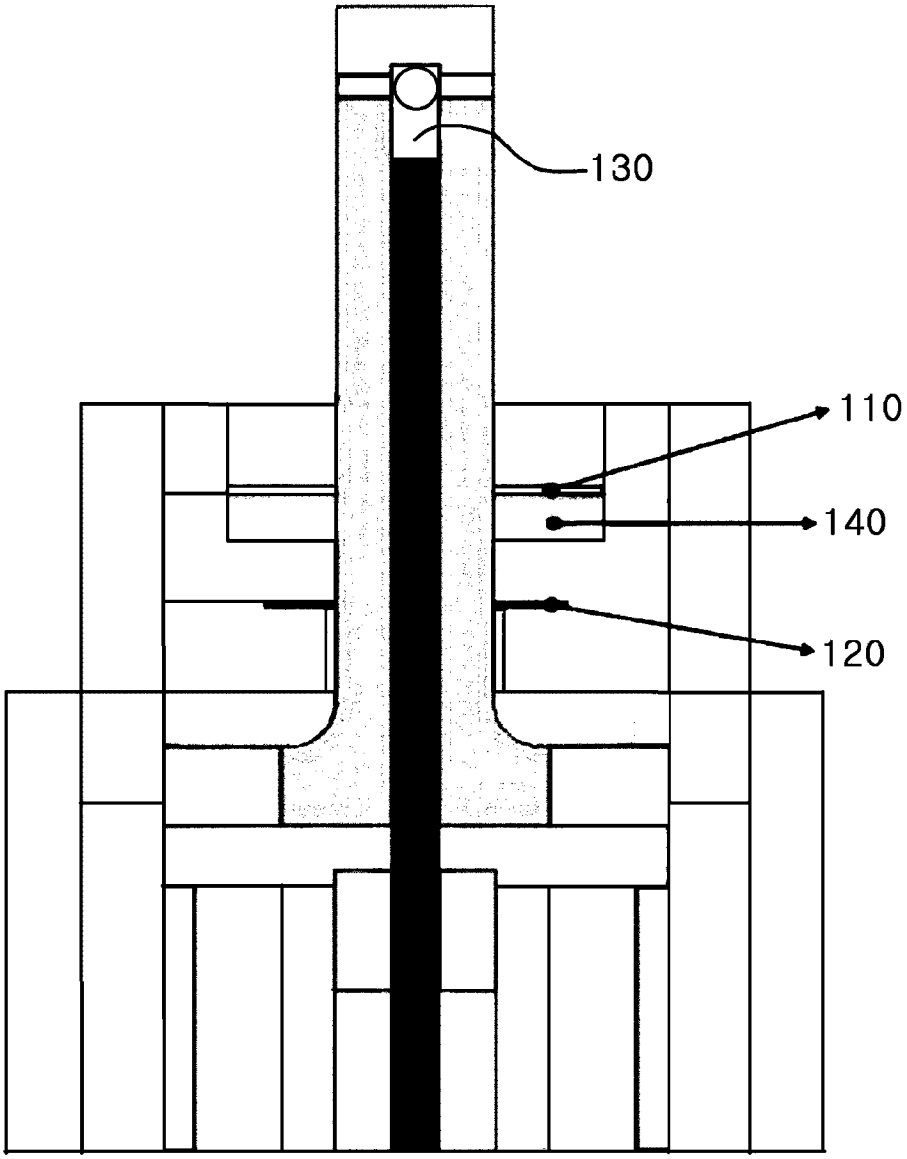

[Fig. 3]

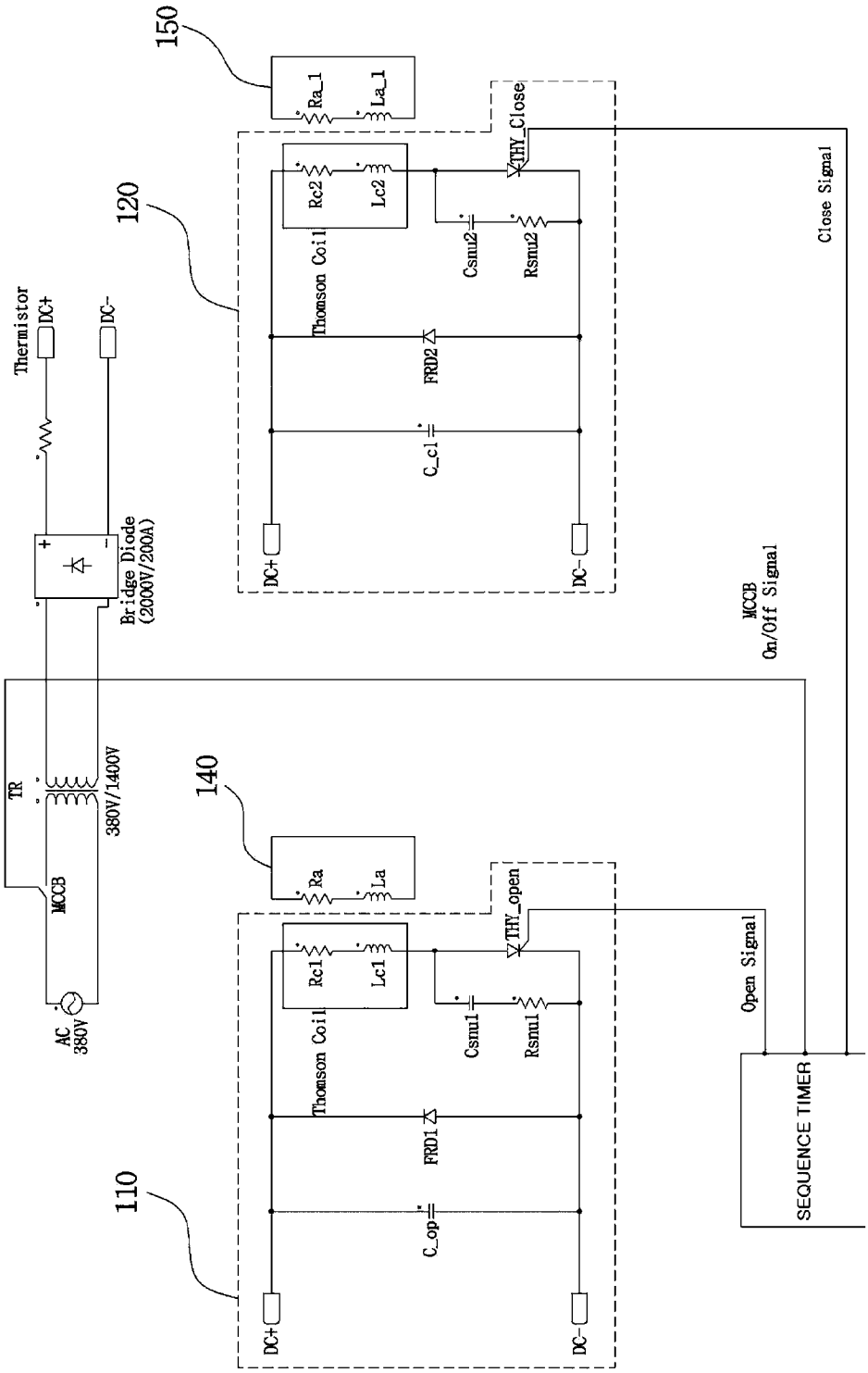
150
Ra_1
La_1
THY_Close
120
Rc2
Lc2
Thomson Coil
Csnu2
Rsnu2
FRD2
C_cl
DC+
DC-
Thermistor
DC+
DC-
Bridge Diode
(2000V/200A)
Close Signal
MCCB
On/Off Signal
TR
380V/1400V
MCCB
AC
380V
140
Ra
La
THY_open
Rc1
Lc1
Thomson Coil
Csnu1
Rsnu1
FRD1
C_op
110
DC+
DC-
Open Signal
SEQUENCE TIMER

INTERNATIONAL SEARCH REPORT

International application No.
PCT/KR2015/014474

A. CLASSIFICATION OF SUBJECT MATTER

H01H 33/28(2006.01)i, H01H 33/42(2006.01)i

According to International Patent Classification (IPC) or to both national classification and IPC

B. FIELDS SEARCHED

Minimum documentation searched (classification system followed by classification symbols)
H01H 33/28; H03K 17/04; H01H 33/20; H02P 5/06; H01H 3/26; H01H 9/20; H01H 9/54; H01H 50/00; H01H 33/42

Documentation searched other than minimum documentation to the extent that such documents are included in the fields searched
Korean utility models and applications for utility models
Japanese utility models and applications for utility models

Electronic data base consulted during the international search (name of data base and, where practicable, search terms used)
eKOMPASS(KIPO internal) & Keywords: DC circuit breaker, fast switch, reactor, thomson coil

C. DOCUMENTS CONSIDERED TO BE RELEVANT

Category*	Citation of document, with indication, where appropriate, of the relevant passages	Relevant to claim No.
X	US 2004-0245857 A1 (LARS LILJESTRAND et al.) 09 December 2004 See abstract, paragraphs [0088]-[0089] and figures 23-24.	1
Y		2-7
Y	KR 10-2012-0130596 A (LSIS CO., LTD. et al.) 03 December 2012 See abstract, paragraphs [0011]-[0014], claims 1, 3 and figure 1.	2-7
A	KR 10-1013709 B1 (LSIS CO., LTD.) 10 February 2011 See abstract, paragraph [0042] and figure 7.	1-7
A	KR 10-2014-0108048 A (KOREA ELECTROTECHNOLOGY RESEARCH INSTITUTE) 05 September 2014 See abstract, paragraphs [0006]-[0010], [0027]-[0082] and figures 1a-6.	1-7
A	US 6204629 B1 (JOHN K. ROTE et al.) 20 March 2001 See abstract, column 2, line 66 - column 4, line 30 and figure 1.	1-7

☐ Further documents are listed in the continuation of Box C.

☒ See patent family annex.

* Special categories of cited documents:
"A" document defining the general state of the art which is not considered to be of particular relevance
"E" earlier application or patent but published on or after the international filing date
"L" document which may throw doubts on priority claim(s) or which is cited to establish the publication date of another citation or other special reason (as specified)
"O" document referring to an oral disclosure, use, exhibition or other means
"P" document published prior to the international filing date but later than the priority date claimed
"T" later document published after the international filing date or priority date and not in conflict with the application but cited to understand the principle or theory underlying the invention
"X" document of particular relevance; the claimed invention cannot be considered novel or cannot be considered to involve an inventive step when the document is taken alone
"Y" document of particular relevance; the claimed invention cannot be considered to involve an inventive step when the document is combined with one or more other such documents,such combination being obvious to a person skilled in the art
"&" document member of the same patent family

Date of the actual completion of the international search	Date of mailing of the international search report
31 March 2016 (31.03.2016)	**31 March 2016 (31.03.2016)**

Name and mailing address of the ISA/KR
International Application Division
Korean Intellectual Property Office
189 Cheongsa-ro, Seo-gu, Daejeon, 35208, Republic of Korea
Facsimile No. +82-42-481-8578

Authorized officer
KIM, Sung Gon
Telephone No. +82-42-481-8746

INTERNATIONAL SEARCH REPORT

Information on patent family members

International application No.

PCT/KR2015/014474

Patent document cited in search report	Publication date	Patent family member(s)	Publication date
US 2004-0245857 A1	09/12/2004	AT 436082 T	15/07/2009
		DE 60232864 D1	20/08/2009
		EP 1377995 A1	07/01/2004
		EP 1377995 B1	08/07/2009
		SE 0100074 A	12/07/2002
		SE 518234 C2	10/09/2002
		US 7235751 B2	26/06/2007
		WO 02-056326 A1	18/07/2002
KR 10-2012-0130596 A	03/12/2012	KR 10-1244526 B1	18/03/2013
KR 10-1013709 B1	10/02/2011	CN 101752108 A	23/06/2010
		CN 101752108 B	02/01/2013
		EP 2194556 A1	09/06/2010
		EP 2194556 B1	24/09/2014
		JP 2010-135323 A	17/06/2010
		JP 4950270 B2	13/06/2012
		KR 10-2010-0063556 A	11/06/2010
		US 2010-0133080 A1	03/06/2010
		US 8258419 B2	04/09/2012
KR 10-2014-0108048 A	05/09/2014	KR 10-1444729 B1	26/09/2014
US 6204629 B1	20/03/2001	DE 69832025 D1	01/12/2005
		DE 69832025 T2	13/07/2006
		EP 0919992 A1	02/06/1999
		EP 0919992 B1	26/10/2005
		JP 11-317032 A	16/11/1999
		SG 68086 A1	19/10/1999
		TW 405112 B	11/09/2000