United States Patent [19]

Becker et al.

[11] **3,888,361**

[45] **June 10, 1975**

[54] **PROGRAMMED MANIPULATOR ARRANGEMENT FOR CONTINUOUSLY MOVING CONVEYOR**

[75] Inventors: **John L. Becker**, Sterling Heights, Mich.; **Otto Hohnecker**, Wilton; **Maurice J. Dunne**, Newtown, both of Conn.

[73] Assignee: **Unimation, Inc.**, Danbury, Conn.

[22] Filed: **May 15, 1974**

[21] Appl. No.: **470,216**

[52] **U.S. Cl.** ..... **214/1 BH**; 198/20 R

[51] **Int. Cl.** **B23k 9/12**

[58] **Field of Search** ..... 214/1 B, 1 BS, 1 BB, 1 BT, 214/1 BC, 1 BH, 1 BD, 1 BV, 147 T, 1 CM, 11 R; 198/38, 20 R, 19

[56] **References Cited**

UNITED STATES PATENTS

3,283,918	11/1966	Devol	214/1 BC
3,543,910	12/1970	Devol et al.	214/1 BD
3,661,051	5/1972	Dunne et al.	91/35
3,665,148	5/1972	Yasenchak et al.	219/125 R
3,744,032	7/1973	Engelberger et al.	219/80 X

Primary Examiner—Frank E. Werner

Attorney, Agent, or Firm—Mason, Kolehmainen, Rathburn & Wyss

[57] **ABSTRACT**

A fixed base programmed manipulator arrangement is provided for cooperation with a continuously moving conveyor wherein the manipulator is positioned so that one axis such as the out-in axis, is parallel to the conveyor. Synchronous operation with the conveyor while permitting limited lateral movements of the manipulator arm is achieved by employing a digital conveyor encoder as a source of continuously varying command signals for the out-in axis of the manipulator. The arrangement does not require positioning of the conveyor at a large number of points along its path during the initial teaching mode of the manipulator apparatus.

12 Claims, 10 Drawing Figures

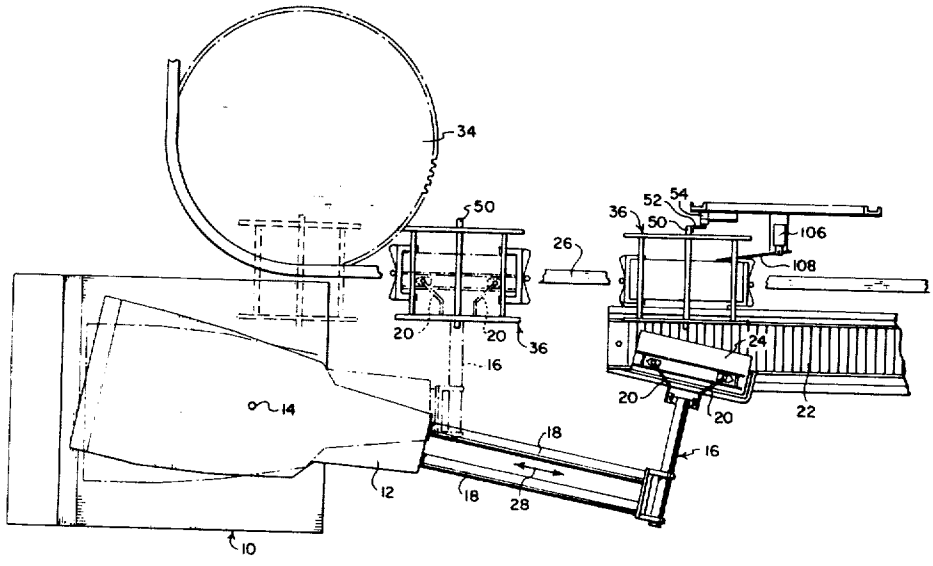

FIG. 1

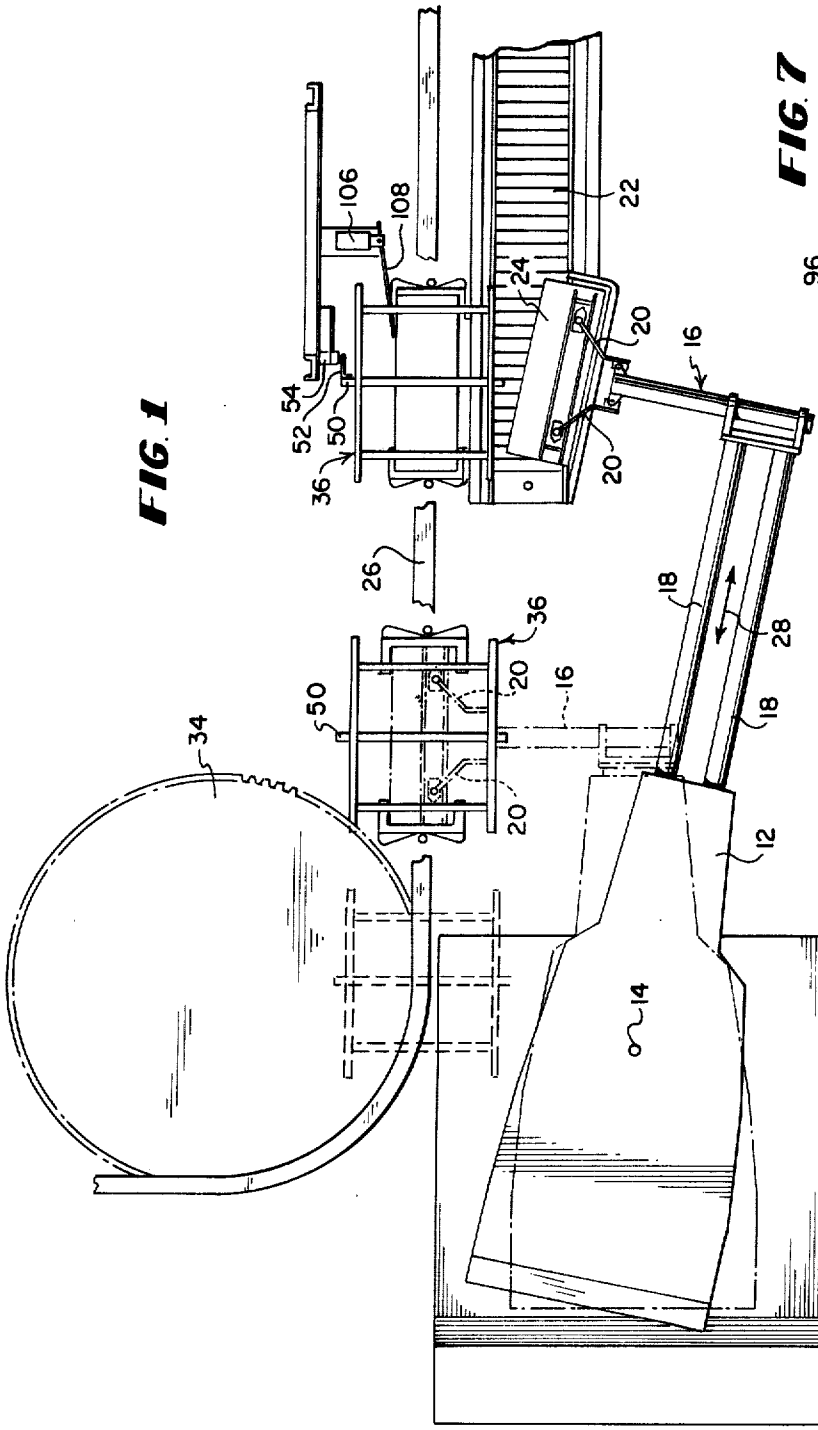
106
108
22
24
20
16
54
52
50
36
26
18
28
34
12
14
10

FIG. 7

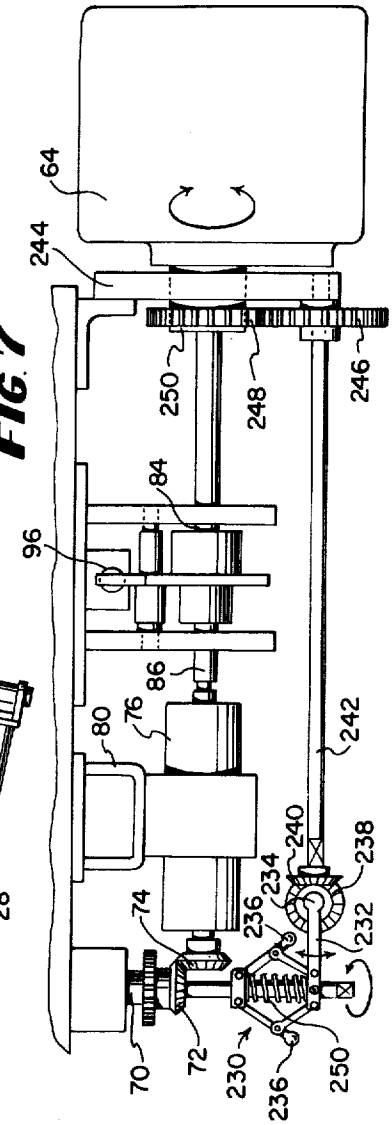
64
244
250
248
246
84
96
86
80
76
242
240
238
234
236
232
74
70
72
230
250

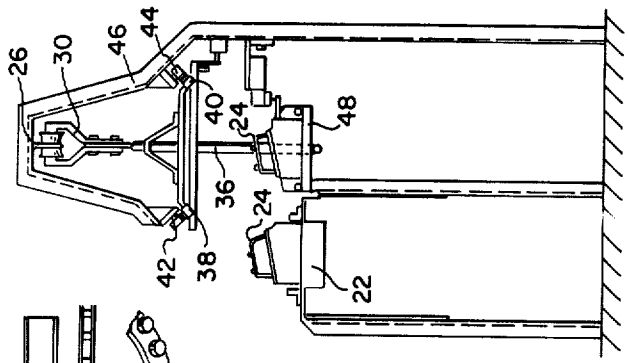

FIG. 3

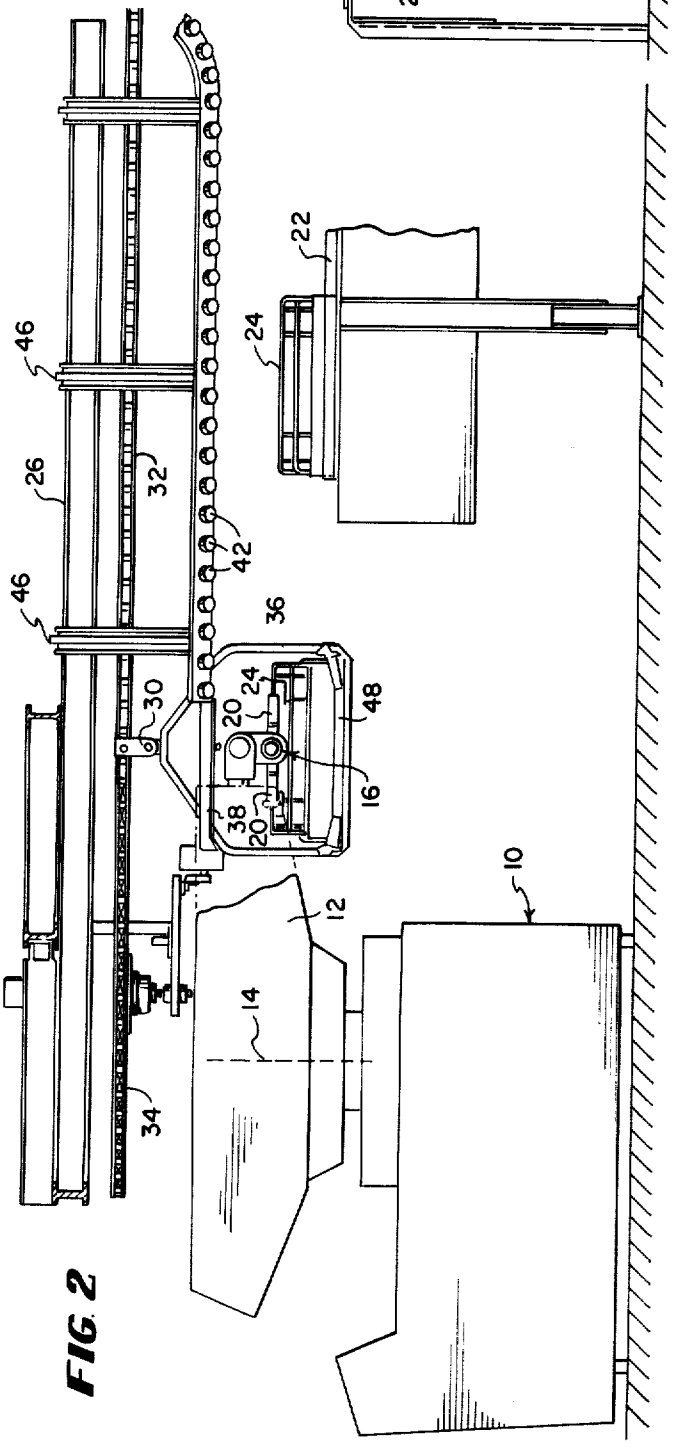

FIG. 2

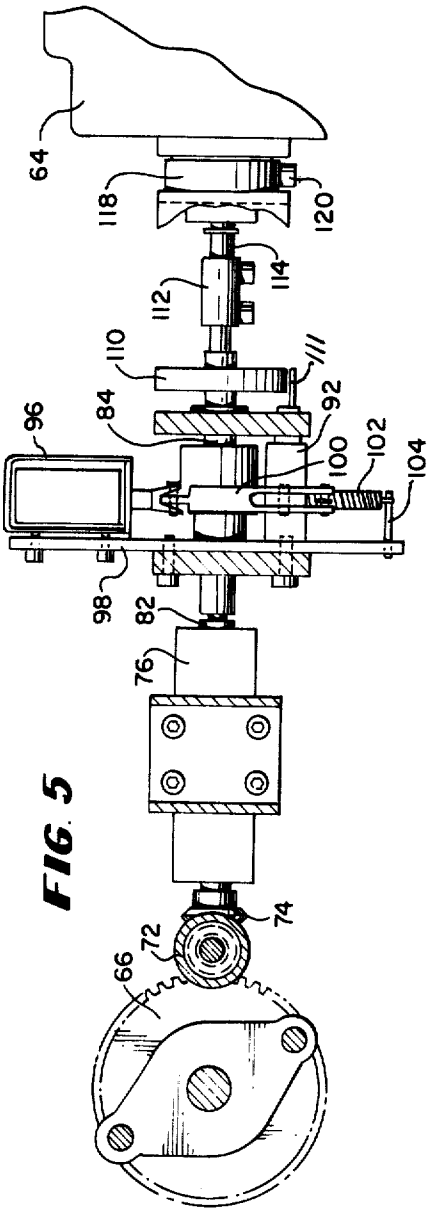

FIG. 5

FIG. 6

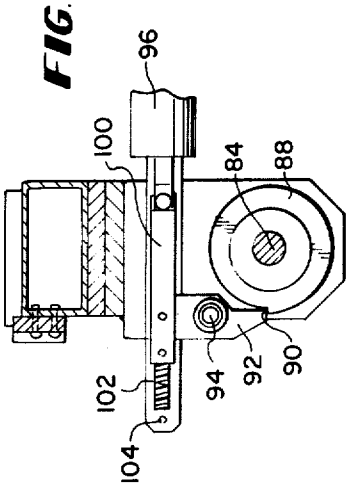
96
100
84
88
102
94
92
90
104

FIG. 4

5
64
120
116
118
114
112
110
6
96
6
88
84
94
86
82
80
78
76
70
68
74
72
66
5
34
60
62

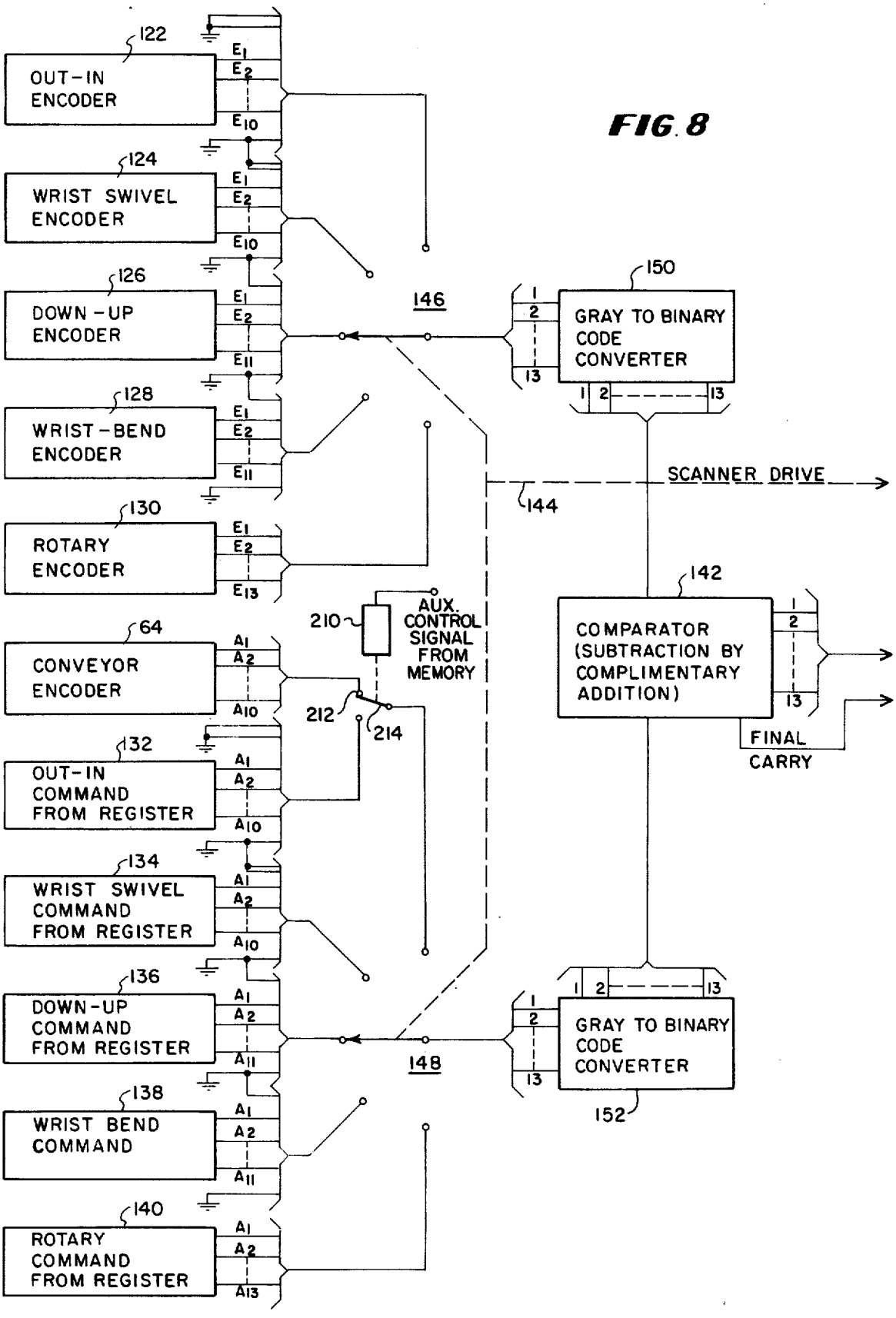
122
OUT-IN ENCODER
E1
E2
E10
124
WRIST SWIVEL ENCODER
126
DOWN-UP ENCODER
E11
128
WRIST-BEND ENCODER
130
ROTARY ENCODER
E13
64
CONVEYOR ENCODER
A1
A2
A10
132
OUT-IN COMMAND FROM REGISTER
134
WRIST SWIVEL COMMAND FROM REGISTER
136
DOWN-UP COMMAND FROM REGISTER
A11
138
WRIST BEND COMMAND
140
ROTARY COMMAND FROM REGISTER
A13
146
148
150
GRAY TO BINARY CODE CONVERTER
152
144
SCANNER DRIVE
142
COMPARATOR (SUBTRACTION BY COMPLIMENTARY ADDITION)
FINAL CARRY
210
AUX. CONTROL SIGNAL FROM MEMORY
212
214

FIG. 8

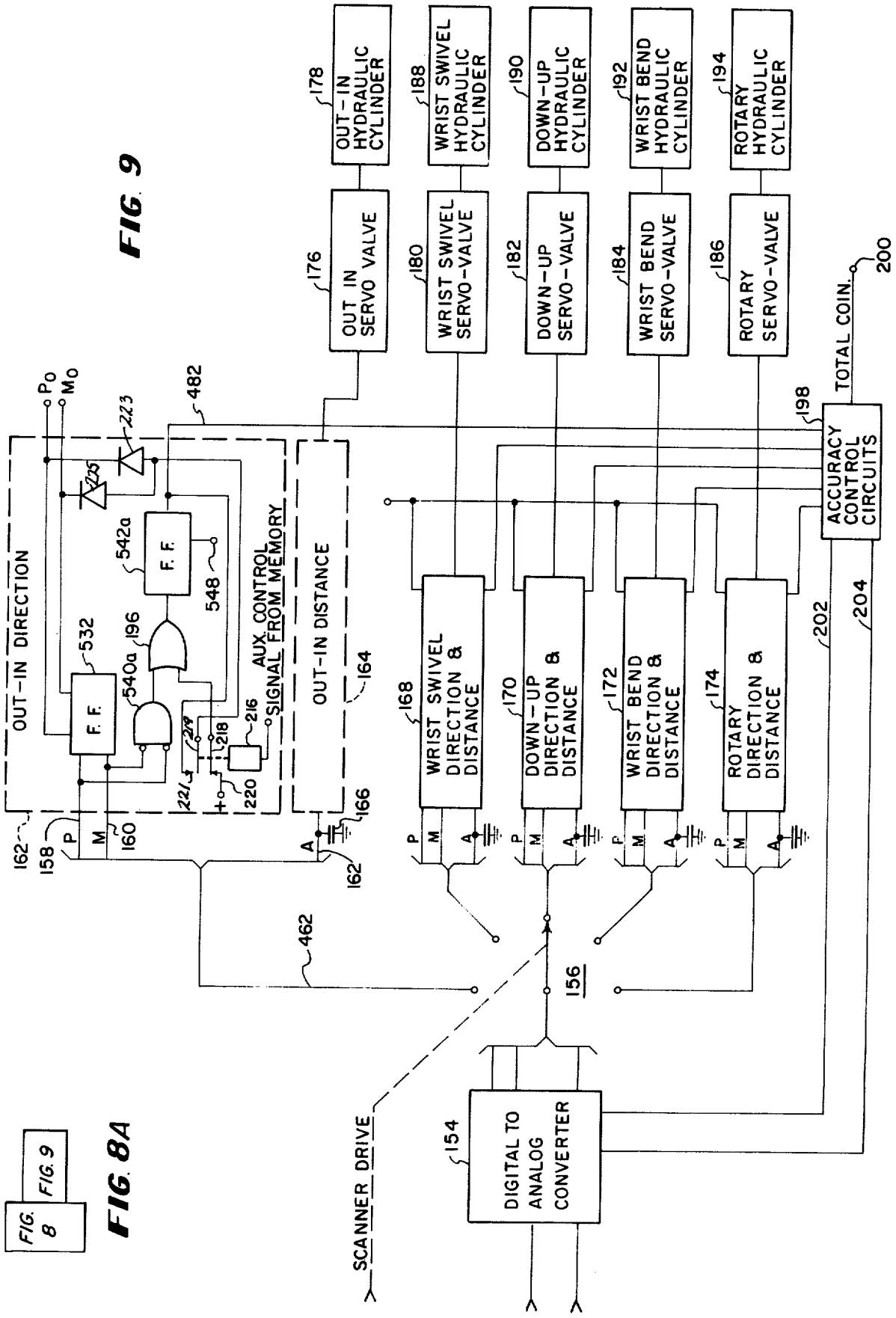

FIG. 9

FIG. 8A

FIG. 8 | FIG. 9

PROGRAMMED MANIPULATOR ARRANGEMENT FOR CONTINUOUSLY MOVING CONVEYOR

The present invention relates to programmed manipulator arrangements, and, more particularly, to programmed manipulator arrangements for cooperating with a continuously moving conveyor.

Many types of arrangements have been heretofore proposed for adapting programmed manipulators to cooperate with a moving conveyor arrangement. For example, Devol U.S. Pat. No. 3,283,918; Engelberger, et al., U.S. Pat. No. 3,744,032; and Yasenchak, et al., U.S. Pat. No. 3,665,148 all disclose continuous conveyor arrangements which are adapted to function with a programmed manipulator. In the Devol and Yasenchak patents the programmed manipulator is programmed while standing still and then is bodily moved along in synchronism with the moving conveyor while the manipulator arm performs a series of work operations on work carried by the manipulator. While these arrangements are generally suitable for their intended purpose, they are relatively expensive since the whole manipulator apparatus must be moved on fixed guide rails parallel to the conveyor.

In Engelberger, et al., U.S. Pat. No. 3,744,032 a fixed base manipulator is employed and a representative workpiece on the conveyor is moved to a large number of different positions in the work area of the conveyor adjacent the fixed base manipulator and these different positions are recorded during the teaching mode of operation of the programmed manipulator. An encoder attached to the conveyor is then employed during the playback or the repeat mode of operation of the manipulator to control the time at which selection of different ones of the command signals in the recorded sequence are selected.

While these arrangements are in general suitable for their intended purposes, it would be desirable to provide an arrangement wherein a fixed base manipulator can be employed in conjunction with a continuously moving conveyor without requiring the recording of a large number of programmed points corresponding to different points along the conveyor path.

It is, therefore, an object of the present invention to provide a new and improved programmed manipulator arrangement for a continuously moving conveyor wherein one or more of the above-discussed disadvantages of the prior art arrangements are avoided.

It is another object of the present invention to provide a new and improved programmed manipulator arrangement for a continuously moving conveyor wherein a conveyor encoder is employed as a continuously varying source of command signals when the manipulator arm is to be moved in a direction generally parallel to the path of movement of the conveyor.

It is another object of the present invention to provide a new and improved programmed manipulator arrangement for a continuously moving conveyor in which the conventional encoder is employed for the in-out axis of the manipulator during the initial portion of the program and facilities are provided for substituting the conveyor encoder as a source of command signals during a second portion of the program.

It is a further object of the present invention to provide a new and improved programmed manipulator arrangement for a continuously moving conveyor wherein the conveyor encoder is employed as a source

of continuously varying command signals during a portion of the repeatable program and facilities are provided for automatically compensating for Changes in speed of the conveyor as it moves past the work station.

Briefly considered, the present invention comprises an arrangement whereby a series of articles may be loaded into a continuously moving conveyor at predetermined locations thereon by positioning the manipulator apparatus so that the out-in axis of the manipulator arm is parallel to but offset from the path of conveyor movement. After the article has been picked up from a supply station the manipulator arm is moved inwardly toward the conveyor but waits at this point until a limit switch signal signifies that a particular carrier has moved into the area of the work station. The next program step includes an auxiliary control signal which is employed to substitute a conveyor encoder, which produces a digital signal corresponding to conveyor movement, for the conventional out-in command signal from the memory. This conveyor encoder signal then is employed to move the manipulator arm in the out-in axis so that the article carried by the gripping head moves in Synchronism with the conveyor. The manipulator arm is then programmed to move downwardly to deposit the article onto one of the conveyor carriers and is then moved outwardly, during all of which time the conveyor encoder controls the out-in axis movement of the arm. Since the conveyor encoder signal is continuously changing as the conveyor moves along its path, a false coincidence signal is produced for the out-in axis of the manipulator apparatus during periods when the auxiliary control signal is present. However, after the article has been placed on the conveyor and the head moved out away from the conveyor, the conventional set of command signals for the out-in axis is substituted for the conveyor encoder signal and the gripping head returns to the initial supply station for pickup of the next article. Compensation is also provided for the speed of the conveyor so that lag between the conveyor encoder command signal and the manipulator arm is compensated.

The invention, both as to its organization and method of operation, together with further objects and advantages thereof, will best be understood by reference to the following specification taken in connection with the accompanying drawings in which:

FIG. 1 is a plan view of a programmed manipulator apparatus and continuously moving conveyor embodying features of the present invention;

FIG. 2 is a side elevational view of the conveyor arrangement of FIG. 1;

FIG. 3 is a right hand view of the conveyor apparatus of FIG. 2;

FIG. 4 is a side elevational view of the conveyor encoder drive arrangement employed in accordance with the present invention;

FIG. 5 is a sectional view taken along the lines 5—5 of FIG. 4;

FIG. 6 is a sectional view taken along the line 6—6 of FIG. 4;

FIG. 7 is a side elevational view of an alternative embodiment which provides compensation for conveyor speed; and

FIGS. 8 and 9 when arranged in the manner shown in FIG. 8A comprise a block diagram of the electronic circuitry employed in accordance with the present in-

vention to provide command signals from the conveyor encoder during certain portions of the program.

Referring now to the drawings, the present invention is therein illustrated as including a fixed base manipulator indicated generally at **10** which is provided with a manipulator arm **12** which is pivotally movable about a vertical axis **14** to provide a rotary axis of motion. The arm **12** is also arranged to be moved in a down-up axis by tilting the arm about a horizontal axis, as described in more detail in Dunne, et al., U.S. Pat. No. 3,661,051. An article holder indicated generally at **16** is mounted on the outer end of the manipulator arm **12** and may be bodily moved relative to the base of the manipulator **10** by means of a pair of telescoping rods **18** to provide movement in a so-called out-in axis. In the present illustration the article holder **16** is provided with a pair of movable arm portions **20** which are arranged to be pneumatically actuated so as to pick up an article from a supply conveyor **22,** these articles in the illustrated embodiment being cylinder heads **24** which move down the conveyor **22** until they strike an obstruction and are tilted to the angle shown in FIG. **1** which is suitable for pickup by expanding the arms **20** of the article holder **16.**

In accordance with an important aspect of the invention the fixed base of the manipulator **10** is arranged so that the path of movement of the overhead guide rail **26** thereof is generally parallel to the direction of motion of the out-in axis of the manipulator **10** indicated by the arrow **28.** With this arrangement, an encoder which measures movement along the conveyor guide rail **26** may be employed as a source of continuously varying command signals for the out-in axis **28** of the manipulator **10** so that the article holder **16** may be moved in synchronism with the moving conveyor without requiring the initial programming of a series of points on the out-in axis during the initial teaching mode of operation of the manipulator apparatus, such a teaching mode being described in detail in said Dunne, et al., U.S. Pat. No. 3,661,051. More particularly, it has been found that over a limited range of rotary movement about the axis **14** the errors introduced by employing the conveyor encoder as a source of command signals to move the manipulator arm in the out-in axis **28** are relatively small. For example, when movement about the rotary axis **14** is limited to 18° the errors introduced in the control of the out-in axis **28** in accordance with movement along the conveyor guide rail **26** are only of the order of 1%.

In the illustrated embodiment the conveyor guide rail **26** supports a plurality of individual carrier units, each of which comprises a double roller suspension unit **30,** which rides on the bottom flange of the rail **26,** and is connected to a chain **32** which is driven by means of a motorized sprocket **34** so that the suspension units **30** are pulled along the guide rails **26** in any predetermined timed relationship one with the other. A carrier frame indicated generally at **36** is pivotally mounted to the bottom of each suspension unit **30.** The frame **36** includes a pair of longitudinally extending inclined portions **38** and **40** which are arranged to be engaged by rollers **42** and **44** mounted in the supporting framework **46** so that as the carrier units **36** are moved along the rail **26** the suspended frames **36** do not sway appreciably but instead are held in relatively fixed position by engagement of the rollers **42, 44** with the inclined surfaces **38, 40** on each carrier. The frame **36** also includes a bed portion **48** which is adapted to receive the article to be transported, such as the cylinder head **24.** Each of the carrier frames also includes a transverse bar **50** which carries an arm **52** which is adapted to engage a microswitch **54** as the carrier **36** is moved along the guide rail **26** so that an indication is provided by closure of the contacts of the limit switch **54** when each of the carrier units **36** is moved to a position within the range of movement of the out-in axis of the manipulator **10,** i.e., to a position opposite the loading station at the end of the supply conveyor **22.**

In accordance with a further aspect of the invention a rotary digital encoder is provided to develop a digital signal corresponding to conveyor movement during the period of time when a conveyor carrier **36** is moved from the initial or pickup position adjacent the end of the supply conveyor **22** to a point at which the article has been deposited on the carrier and the article holder **16** moved out of the path of the carrier. In the illustrated embodiment this length of conveyor movement is made equal to the full range of movement of the manipulator **10** in the out-in axis **28,** which is customarily 42 inches. Accordingly, the conveyor encoder is provided with a resolution which is the same as the out-in encoder normally employed in the manipulator **10** to measure movement in the out-in axis, as described in detail in said Dunne, et al., U.S. Pat. No. 3,661,051. Furthermore, this measured 42 inches of movement of the conveyor carrier is made equal to one revolution of the rotary conveyor encoder and this encoder is then stopped after one revolution and remains stationary until the next carrier bar **50** actuates the limit switch **54.**

Considering now the encoder drive mechanism which is Shown in more detail in FIGS. **4, 5** and **6,** the sprocket **34** has a dish shaped housing **60** secured to the underside thereof, the housing supporting a shaft **62** which acts as the encoder drive shaft for the conveyor encoder **64.** Preferably, the conveyor encoder **64** is of the type shown and described in Leonard U.S. Pat. No. 3,525,094 wherein a suitable light source and complementary coded discs and masks are employed to develop a multi-bit digital signal corresponding to rotation of an input shaft. However, it will be understood that any other suitable type of rotary digital encoder may be employed for the conveyor encoder **64** insofar as the present invention is concerned, it being noted that this rotary encoder must be capable of producing a digital output signal having the same resolution as the out-in encoder employed in the manipulator apparatus **10.** For example, in said Dunne, et al., U.S. Pat. No. 3,661,051 the out-in encoder is illustrated as developing a ten-bit digital signal. Accordingly, the conveyor encoder **64** would be required to produce a digital signal of similar resolution.

The conveyor encoder drive shaft **62** is employed to drive a spur gear **66** secured to the bottom end thereof, the gear **66** in turn driving a spur gear **68** which is mounted on a stub shaft **70.** A pair of meshing beveled gears **72, 74** are employed to drive a magnetic clutch **76** which is mounted on the conveyor encoder drive frame **78** by means of the bracket **80.** The magnetic clutch **76** is continuously energized and the output shaft **82** thereof is connected to a one revolution clutch shaft **84** through the coupler **86.** A clutch plate **88** is secured to the shaft **84** and is provided with a notch **90** in the periphery thereof which is adapted to be engaged

by the end of a pawl **92** pivotally mounted on the pin **94.** A solenoid **96** is mounted on a plate **98** and is pivotally connected to a solenoid link member **100** the other end of which is connected to an extension spring **102** which is in turn connected to a pin **104** carried by the plate **98.** Accordingly, the pawl **92** is normally urged by the spring **102** so that the tip of the pawl **92** is in engagement with the notch **90** on the plate **88.** Under these conditions the shaft **84** is restrained from movement even though the conveyor drive input shaft **62** is continuously rotating and the magnetic clutch **76** under these conditions slips. However, when the limit switch **54** is actuated, indicating that a carrier **36** has been moved to the desired pickup position, the solenoid **96** is energized. The limit switch signal is also employed as a wait external signal for the manipulator apparatus **10** to enable the succeeding program steps involving the deposit of the cylinder head **24** on one of the carriers **36,** as will be described in more detail hereinafter. When the solenoid is energized it pivots the pawl **92** about the pin **94** so that the tip of the pawl **92** is moved out of engagement with the notch **90.** When this occurs the shaft **84** is permitted to rotate one full revolution at which point the pawl **92,** which is now biased by means of the spring **104,** engages the notch **90** and stops rotation of the shaft **84.**

If desired, a second limit switch **106** may be arranged to be actuated by means of a spring biased wand **108** which senses whether or not a cylinder head **24** has already been positioned on the particular carrier **36** as it moves past the limit switch **54.** Under these conditions it is of course not desired to load an additional cylinder head onto this carrier. Accordingly, the limit switches **54** and **106** are connected in series and are employed to energize the solenoid **96** and as a wait external signal for the manipulator **10,** only when both switches are closed.

The shaft **84** carries a dial member **110** thereon, cooperating with a fixed indexing marker **111** (FIG. **5**) and is coupled through the coupling **112** to the input shaft **114** of the rotary conveyor encoder **64.** The housing **116** of the encoder **64** is clamped by means of the collar **118** which in turn is secured to the frame **78.** Accordingly, by loosening the collar **118,** by means of the bolt **120,** the housing of the conveyor **64** may be adjusted to a desired position relative to the rotor shaft **114** thereof, as will be described in more detail hereinafter.

Considering now the electronic circuitry of the manipulator apparatus **10** which is employed in accordance with the present invention to effect a changeover from the normal out-in command signal to the digital signal developed by the conveyor encoder **64,** and referring to FIGS. **8** and **9** of the drawings, it is first pointed out that this electronic circuitry is generally similar to that described in the above-identified Dunne, et al., U.S. Pat. No. 3,661,051 and reference may be had to said Dunne et al patent for a detailed description of both the teaching and playback modes of operation of such electronic circuitry. However, for purposes of the present invention it may be stated that the five encoders individually associated with the five controlled axes of the manipulator apparatus are shown as the out-in encoder **122,** the wrist swivel encoder **124,** the down-up encoder **126,** the wrist-bend encoder **128** and the rotary encoder **130,** the conveyor encoder **64** also being shown in FIG. **8** as having ten digital output conductors **A1, A2–A10** corresponding to the ten output conductors **E1, E2–E10** of the out-in encoder **122.**

In a similar manner the five command signals which are normally read from the memory storage drum and employed as fixed command signals to control movement of the manipulator arm **12** to a desired point are shown as the out-in command **132,** the wrist swivel command **134,** the down-up command **136,** the wrist-bend command **138** and the rotary command **140.** In this connection it will be understood that these command signals are originally derived from the memory drum and are stored in a buffer storage register while the previously read set of command signals is employed to move the manipulator arm, as described in detail in said Dunne, et al., U.S. Pat. No. 3,661,051.

The corresponding encoder signal and command signal for each axis are sequentially compared in a comparator **142,** the two inputs to the comparator **142** being sequentially multiplexed to the individual encoder signals and command signals for each axis through a scanner drive multiplexing arrangement indicated generally at **144** and the multiplex switches **146** and **148,** the gray-to-binary code converters **150** and **152** being employed to convert the gray code signals developed by the encoders **122** to **130,** inclusive, and the corresponding command signals to binary code before application to the comparator **142.** The output of the comparator **142** is supplied to a digital to analog converter **154** and is then distributed by means of the distributor multiplex switch **156** to the direction and distance circuits corresponding to each axis. More particularly, a plus or minus signal is applied over the conductor **158** or **160** to the out-in direction circuit indicated generally at **162,** these direction signals being dependent upon the direction in which the manipulator arm **12** is to be moved to reduce the error signal developed by the digital-to-analog converter **154** to zero. The actual value of the error signal is also applied to a conductor **163** in the out-in distance circuit **164** and is stored in a capacitor **166** while the other axes are being scanned by the switch **156,** as described in detail in said Dunne, et al., U.S. Pat. No. 3,661,051. In a similar manner direction and distance signals are supplied to the wrist swivel circuits **168** the down-up circuits **170,** the wrist-bend circuits **172,** and the rotary circuits **174.** The output of each distance circuit is supplied to a corresponding servo valve which is employed to control movement of the corresponding hydraulic cylinder so that the manipulator arm is moved in the desired axis. Thus, the amplified error signal developed by the out-in distance circuit **164** is supplied to the out-in servo valve **176** which controls the out-in hydraulic cylinder **178.** In a similar manner the wrist swivel servo valve **180,** the down-up servo valve **182,** the wrist-bend servo valve **184** and the rotary servo valve **186** control respectively the hydraulic cylinders **188, 190, 192** and **194.**

As described in detail in Dunne, et al., U.S. Pat. No. 3,661,051 the next step in a given program may be selected whenever the manipulator arm has been moved to the previously programmed point with a particular designated accuracy. Thus, if the manipulator arm **12** has been moved exactly to the programmed point, the signals on the positive conductor **158** and minus conductor **160** will both be negative so that a signal is transmitted through the AND-gate **540*a*** and through an OR-gate **196** to a flip-flop circuit **542*a*** which is then set. When the flip-flop **542*a*** is set a signal appears on

the conductor **482** which is supplied to the accuracy control circuits indicated generally at **198.** When all of the programmed movements in each of the other axes have also been exactly accomplished the accuracy control circuits **198** function to develop a total coincidence signal at the terminal **200** which is then employed to step the memory drum to the next programmed step. Such an accuracy measurement is called accuracy No. 1 and if less accurate positioning of the manipulator arm to the desired programmed point is acceptable then so-called accuracy No. 2 or accuracy No. 3 signals derived from the digital to analog converter **154** and supplied over the conductors **202** and **204** to the accuracy control circuits **198** may also be employed to develop a total coincidence signal when the error signals in all axes reach a predetermined value. All of the above-described electronic circuitry for the five controlled axes of the manipulator is described in detail in said Dunne, et al., U.S. Pat. No. 3,661,051 and hence a detailed description thereof is not considered necessary herein.

Considering now the manner in which the manipulator **10** is programmed during the teaching mode of operation of the apparatus and in accordance with the present invention, with a cylinder head **24** positioned at the point shown in full lines in FIG. **1** on the supply conveyor **22** the manipulator arm is moved under the control of a teach control unit and as described in detail in said Dunne, et al., U.S. Pat. No. 3,661,051, so that the article holder arms **20** move inwardly over the cylinder head **24** and downwardly so that the arms may be actuated outwardly to grasp the cylinder head **24.** The wrist-bend axis is also controlled so that the hand is pointing down, as shown in FIG. **2** so that motion in the wrist swivel axis can be employed to align the cylinder head **24** with the conveyor path after it is picked up. The manipulator arm is then moved under the control of the teach control unit so that the grasped cylinder head **24** is lifted off the conveyor **22** and is moved inwardly, by motion about the rotary axis **14** to a point just outside the path of the carriers **36** which are moving along the monorail **26.** A programmed WX or wait external signal is also recorded at this point in the program so that during playback selection of the next programmed step will be delayed until a signal is developed by the limit switch **54,** or the limit switches **54** and **106** in series. For the next program step the manipulator arm **12** is moved fully inward toward the conveyor monorail **26** so that the cylinder head **24** is positioned in line with one of the carriers **36** which has just engaged the limit switch **54.** An auxiliary control signal is also recorded during this program step which is employed to shift control from a conventional out-in command signal channel to the conveyor encoder **64,** as will be described in more detail hereinafter during the playback phase of operation. The manipulator arm is then moved in the down-up axis and if necessary in the wrist swivel axis so that the cylinder head **24** is deposited on the base **48** of the carrier **36** while this carrier remains in a fixed position adjacent the limit switch **54.** An auxiliary control signal is also recorded at this program step. The next program step is release of the gripping fingers **20** and during this program step an auxiliary control signal is also recorded. The next program step is to move the article holder **16** upwardly slightly to provide clearance between the fingers **20** and the deposited cylinder head on one of the carriers **36.** An auxiliary signal is also recorded at this program step. The article holder **16** is then programmed to move outwardly beyond the path of the conveyor carriers **36** and an auxiliary control signal is also recorded during this program step. The final program step is one in which the manipulator arm is moved back to its initial position shown in full lines in FIG. **1** and during this program step no auxiliary control signal is recorded since movement in the out-in axis need no longer be synchronized with movement of the conveyor carrier **36.** It will be noted that in the teaching mode there is no requirement for recording of a multiplicity of conveyor positions corresponding to movement of the conveyor during the period when the cylinder head is moved inwardly, deposited on the carrier **36,** released, and the holder **16** is moved outwardly beyond the path of the carriers. Accordingly, the number of program steps required during the teaching or programming of the manipulator apparatus in accordance with the present invention is greatly reduced over that required in arrangements such as shown in Engelberger, et al., U.S. Pat. No. 3,744,032.

Considering now the operation of the manipulator apparatus **10** during the playback or repeat mode of operation, and assuming that the manipulator apparatus is in the position shown in full lines in FIG. **1,** the gripping fingers **20** are moved inwardly and downwardly to grasp a cylinder head **24** on the conveyor **22** and this head is moved upwardly and inwardly to a point adjacent the path of the carriers **36** during the first recorded program steps. However, the manipulator arm does not move further inwardly until a WX signal is received by closure of the limit switch **54.** When this occurs the next program step is selected in which the cylinder head is to be moved inwardly in line with the carrier **36.** However, this movement must be synchronized with the continuous movement of the carrier **36.** This is accomplished in response to the auxiliary control signal which has also been recorded at this program step. This auxiliary control signal is supplied to a relay **210** (FIG. **8**) and actuates this relay so that the multi-digit output signal of the out-in command **132** is no longer connected to the multiplexer switch **148** and instead the ten-bit output of the conveyor encoder signal **64** is supplied through the multiple contacts **212** and arms **214** of the relay **210** to this distributor. At the same time the auxiliary control signal is supplied to a relay **216** in the out-in direction circuit **162,** so that this relay is also energized. When the relay **216** is energized the arm **218** thereof closes a contact **220** which is connected to a plus voltage supply and so that a signal is supplied to the other input of the OR-gate **196.** This signal passes through the OR-gate **196** and sets the flip-flop **542a** so that an accuracy No. 1 coincidence signal is produced on the conductor **482.** Thus, the auxiliary control signal which has been programmed at this particular program step functions to provide a false out-in coincidence signal for the out-in axis even though movement in the out-in direction has just barely started. However, since the manipulator arm is to be moved inwardly by motion in the rotary axis **14** the rotary direction and distance circuits **174** have not yet reached coincidence and hence a total coincidence signal is not yet produced on the terminal **200** so that the next program step is not selected.

When the relay **216** is energized the arm **219** thereof also opens the contact **221.** When the contact **221** is

closed, during normal operation of the manipulator **10**, the output of the flip-flop **542***a* is supplied through the diodes **223** and **225** to the conductors Po and Mo and has the effect of disabling the servo valve **176**, as described in detail in said Dunne, et al., U.S. Pat. No. 3,661,051. However, during control of the out-in axis by the conveyor encoder **64** it is necessary that the out-in servo valve **176** and cylinder **178** function properly even though an artificial coincidence signal is produced for this axis by closure of the contact **220**. Accordingly, when this false coincidence signal is produced, the contact **221** is opened, thereby removing the disabling signal from the conductors Po and Mo. In this connection, it will be understood that a false coincidence signal for the out-in axis may be employed even though the other axes of the manipulator are controlled to accuracy No. 2 or accuracy No. 3, in the event that a particular step or steps of the program need not be performed with an accuracy as precise as accuracy No. 1. In such case, the false coincidence signal on the conductor **482** is simply combined with the desired accuracy No. 2 or No. 3 conductors for the other axes to obtain the total coincidence signal at the terminal **200**.

Considering now the effect of substituting the conveyor encoder **64** for the out-in command signal normally supplied from the buffer storage register, since the conveyor is continuously moving and the solenoid **96** has been actuated by the same limit switch signal derived from the limit switch **54** (or the limit switches **54** and **106** in series) the out-in direction and distance circuits **162** and **164** function in the conventional manner to move the out-in hydraulic cylinder **178** so that the article holder **16** is moved generally in synchronism with the conveyor carrier **36** as this article holder is moved inwardly to position the cylinder head **24** immediately over the base **48** of the carrier **36**. In this connection it is pointed out that since this arcuate movement about the rotary axis **14** is only a few degrees the error introduced by employing the conveyor encoder signal as an out-in command signal is very small and does not appreciably affect the accuracy with which the cylinder head is moved relative to the conveyor.

When the inward movement of the article holder has been completed a total coincidence signal is produced on the terminal **200** and the next program step is selected. In accordance with this program step the article holder **16** is to be moved downwardly so as to deposit the cylinder head **24** onto the base **48**. However, an auxiliary control signal was also recorded during the teaching mode at this program step so that the conveyor encoder **64** continues to function as a source of command signals for the out-in axis and the article holder **16** continues to be moved to the left as viewed in FIG. **1** in synchronism with the conveyor as the cylinder head is deposited on the base **48**. While the flip-flop **542***a* is arranged to be reset at the selection of each new program step, by application of a pulse to the terminal **548** as described in detail in said Dunne, et al., U.S. Pat. No. 3,661,051, the relay **216** is again energized by the auxiliary control signal recorded at the new program step so that the flip-flop **542***a* is immediately reset by closure of the contact **220**.

During the next program steps the cylinder head is released, the article holder **16** is moved upwardly slightly and then moved outwardly to clear the carrier **36**, the conveyor encoder **64** being employed during all of these program steps to control movement of the manipulator arm in the out-in axis **28** since an auxiliary control signal was recorded during each of these program steps, as described above during the teaching mode of operation of the manipulator **10**. As a result, the article holder **16** is moved to the position shown in dotted lines in FIG. **1** at the end of these program steps and has been maintained in synchronism with the conveyor carrier **36** during this entire motion in the out-in axis **28**. However, after the article holder **16** has been moved outwardly beyond the path of the carrier **36** it is then moved back to its initial position shown in full lines in FIG. **1** under the control of the out-in command **132** since synchronism with the conveyor is no longer required. This is accomplished simply by the absence of an auxiliary signal for these program steps so that the relays **210** and **216** are not energized. In this connection it will be noted that the movement in synchronism with the conveyor is accomplished during one revolution of the conveyor encoder **64** and at the end of this revolution the pawl **92** again engages the notch **90** so that the conveyor encoder **64** remains at its initial setting until the next time the solenoid **96** is actuated during the next programmed cycle. The conveyor encoder **64** is thus arranged to provide a ten bit digital signal corresponding to movement of approximately **42** inches in the out-in axis **28**. It will also be understood that other types of programs may be employed and the principles of the present invention still utilized. It is only required that the controlling movement which is encoded, i.e., the conveyor movement in the illustrated embodiment, should be parallel to the axis of the manipulator apparatus **10** which it controls and only limited lateral shifts with respect to this axis should be made during the program so that acceptable errors between the commanded position and the actual position in the out-in axis are developed during synchronous movement with the conveyor. It will also be understood that other types of work handling or work performing operations may be employed on a workpiece positioned on a moving conveyor. For example, a paint spraying or spot welding head may be attached to the end of the manipulator arm **12** and a series of work operations performed on a substantially vertical section of the workpieces as it moves along in a direction parallel to the out-in axis of the manipulator **10**.

While closure of the limit switch **54** is employed as an initiation signal to shift control of the out-in axis to the conveyor encoder **64**, it will be understood that a certain lag is produced between the position indicated by the conveyor encoder **64** and the actual physical position of the article holder **16** in the out-in axis **28**. This is because the conveyor carrier **36** is continuously moving and will have developed a command signal of a certain magnitude before the error signal developed by the comparator **142** functions to move the article holder **16** in the out-in axis in the same direction as the conveyor.

In order to compensate for this lag in the out-in axis, the housing of the conveyor encoder **64** may be adjusted by loosening the clamp **118** and the housing is moved such that the digital signal developed by the conveyor encoder **64** is actually somewhat greater than the physical position of the conveyor carrier **36** as it moves along the conveyor path. Thus, if a lag of two inches is experienced when the encoder **64** is used to control the out-in axis, the housing of the conveyor encoder **64** is shifted so that its digital output signal corre-

sponds to two inches when it is in its initial position at the time the solenoid **96** is actuated.

The above-described compensation for lag in response of the out-in axis to the continuously varying conveyor encoder command signal is based on the assumption that the conveyor moves at a constant speed. In the event that the conveyor speed varies, or is not known at the time the initial program is made, the arrangement shown in FIG. **7** may be employed whereby automatic compensation for lag in the out-in axis is achieved. Thus, referring to this figure, a speed conveyor **230** is mounted on the end of the shaft **70** and the output arm **232** thereof is arranged to pivot about an axis **234** when the position of the balls **236** varies in accordance with the speed of rotation of the shaft **70**, as will be readily understood by those skilled in the art. The arm **232** carries a beveled gear **238** which is in mesh with a beveled gear **240** on a shaft **242** the other end of which is rotatably mounted in the mounting bracket **244** for the conveyor encoder **64**. A gear **246** is secured to the shaft **242** and engages a spur gear **248** which is secured to the housing **250** of the conveyor encoder **64**. Accordingly, when the conveyor is standing still the arm **232** is forced downwardly by the spring **252** so that the arm **232** is in its downwardmost position in which position the housing of the encoder **64** is set to provide a zero digital output signal from the encoder **64**. As the speed of the conveyor increases the balls **236** fly outwardly and the arm **232** is pivoted upwardly so as to rotate the shaft **242** and through the gears **246** and **248** the housing **250** of the encoder **64** in proportion to conveyor speed. Accordingly, the above-described lag during periods when the conveyor encoder is used as a source of command signals is automatically compensated in accordance with the arrangement of FIG. **7**.

While there have been illustrated and described various embodiments of the present invention, it will be apparent that various changes and modifications thereof will occur to those skilled in the art. It is intended in the appended claims to cover all such changes and modifications as fall within the true spirit and scope of the present invention.

What is claimed as new and desired to be secured by Letters Patent of the United States is:

1. In a programmed manipulator, the combination of, a manipulator arm, means for moving said arm along a plurality of axes, a continuously moving conveyor positioned adjacent said programmed manipulator, first encoder means for developing a digital signal corresponding to the absolute position of said arm in one of said axes, second encoder means for developing a digital signal representing the actual position of said conveyor, means for developing a sequence of digital command signals having one component corresponding to desired positions of said arm along said one axis, means for comparing the encoder signal of said first encoder means and said one component of one of said command signals to develop an error signal equal to the difference therebetween, means responsive to said error signal for controlling said moving means to move said arm along said one axis in the direction to reduce said error signal, at least some of said command signals including an auxiliary control signal, and means responsive to said auxiliary control signal for connecting said second encoder means to said comparing means in place of said one component of said command signal, whereby the encoder signal of said second encoder means acts as a continuously variable series of command signals to control movement of said manipulator arm in said one axis in accordance with movement of said conveyor along the path thereof.

2. The combination of claim **1**, wherein said one axis is the out-in axis of said manipulator arm along which the arm is extended or contracted.

3. The combination of claim **2**, wherein said manipulator has a fixed base which is positioned relatively close to said conveyor path so that said second encoder means may be employed as a source of command signals for the out-in axis of said manipulator arm without introducing substantial error.

4. The combination of claim **1**, which includes means for normally developing a total coincidence signal when said error signal is reduced to a predetermined magnitude, means responsive to said total coincidence signal for connecting the next command signal in said sequence to said comparing means, and means responsive to said auxiliary control signal for developing a false coincidence signal for said one axis, whereby said sequence of command signals is employed to move said manipulator arm to different positions while said second encoder means continues to control movement of said arm in said one axis.

5. The combination of claim **1**, which includes means for supplying articles to be placed on said conveyor at a pickup station adjacent said manipulator, and said sequence of digital command signals is effective to control said arm to seize an article at said pickup station and deposit it in a predetermined orientation on said continuously moving conveyor.

6. The combination of claim **5**, wherein said conveyor includes a series of carriers on which articles are to be placed, and means responsive to movement of one of said carriers to a predetermined position for initiating said sequence of command signals.

7. The combination of claim **1**, wherein said first and second encoder means both have the same resolution in terms of bits per increment of motion.

8. The combination of claim **1**, wherein said second encoder means is a rotary encoder having a housing and a code wheel rotatably mounted therein, and gearing means interconnecting said conveyor and said code wheel so that said code wheel is rotated one full revolution in response to a predetermined movement of said conveyor along said path.

9. The combination of claim **8**, which includes means for adjustably positioning said housing of said rotary encoder, thereby to compensate for lag in the movement of said manipulator arm relative to said conveyor.

10. The combination of claim **8**, which includes a clutch included in said gearing between said conveyor and said code wheel for disconnecting said code wheel from said conveyor after a predetermined rotation of said code wheel.

11. The combination of claim **10**, which includes a notched disc connected to said code wheel, a pawl member normally in engagement with said notched disc and operative to prevent said code wheel from rotating, and solenoid means for actuating said pawl member to permit rotation of said code wheel through said clutch means.

12. The combination of claim **11**, wherein said conveyor includes a series of carriers on which articles are to be placed, and means responsive to mvoement of one of said carriers to a predetermined position for energizing said solenoid means.

* * * * *