May 14, 1935. J. W. OWENS 2,001,542

UNDERVOLTAGE PROTECTIVE SYSTEM

Filed Oct. 19, 1933 2 Sheets-Sheet 1

Fig. 1.

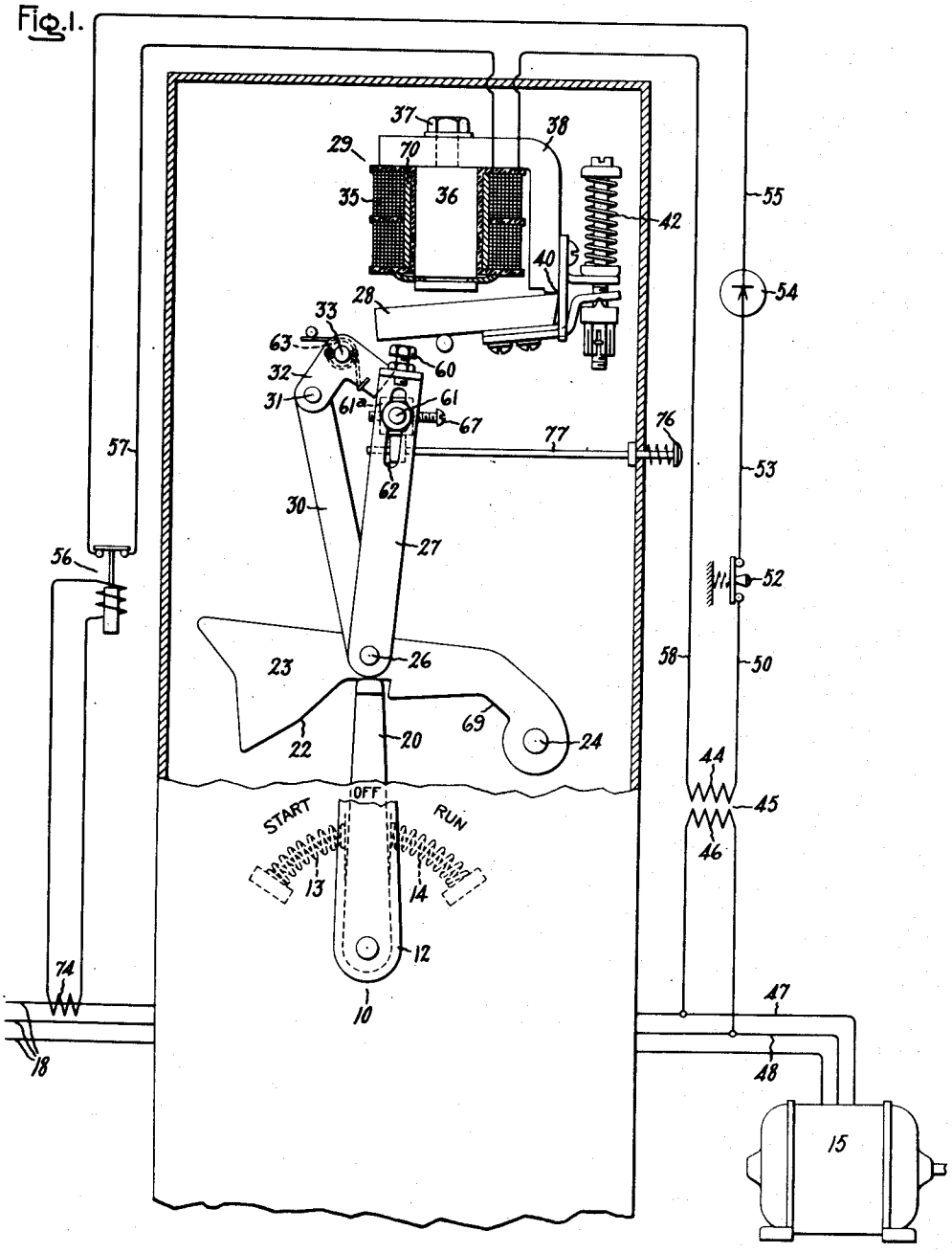

Inventor:
Joseph W. Owens,
by Harry E. Dunham
His Attorney.

May 14, 1935. J. W. OWENS 2,001,542

UNDERVOLTAGE PROTECTIVE SYSTEM

Filed Oct. 19, 1933 2 Sheets-Sheet 2

Fig. 2.

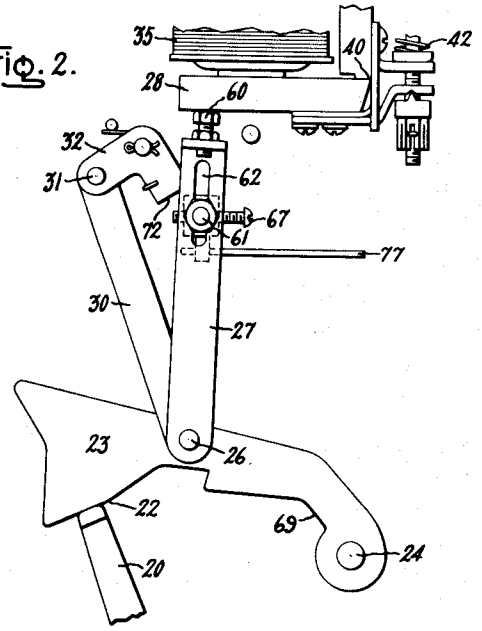

Fig. 3.

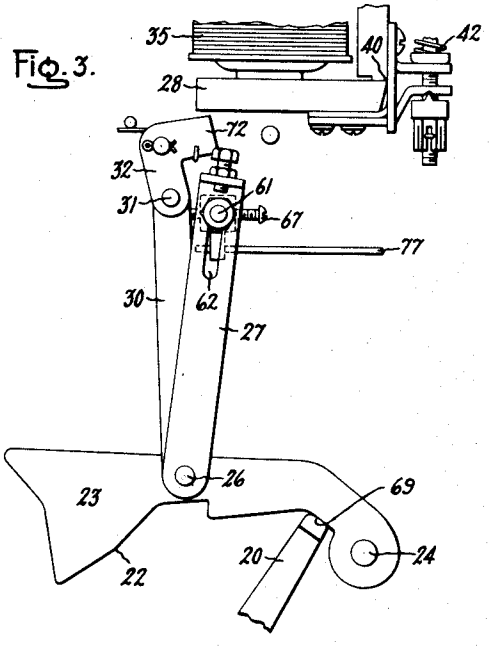

Inventor:
Joseph W. Owens,
by Harry E. Dunham
His Attorney.

Patented May 14, 1935

2,001,542

UNITED STATES PATENT OFFICE

2,001,542

UNDERVOLTAGE PROTECTIVE SYSTEM

Joseph W. Owens, Schenectady, N. Y., assignor to General Electric Company, a corporation of New York

Application October 19, 1933, Serial No. 694,273

9 Claims. (Cl. 175—294)

My invention relates to undervoltage protective systems wherein a time delay is provided before a translating device is deenergized in the event of a dip in the line voltage, and has for an object the provision of a simple, inexpensive and reliable system of this character.

Heretofore motors and translating devices of various forms have been protected against a temporary failure of the power supply. In order to distinguish between a loss of power and a predetermined reduction in the supply voltage, a time element is introduced so that the protective device does not operate unless the reduction in voltage persists beyond a predetermined time interval. Such a scheme is shown in Townsend Patent 1,695,748. Much is yet to be desired however in reducing the number of moving parts while retaining a thoroughly reliable means for protecting against momentary dips in the line voltage.

In carrying out my invention in one form, I take advantage of the time interval required for the decay of flux in a magnet to control the operation of a latching mechanism for a switch. More specifically, I provide an electromagnet with a normally closed magnetic circuit, the armature of which is biased to a position to operate a switch to the open circuit position, and the operating coil of which is energized through a rectifier so that the coil circuit is normally closed to permit the flow of current in the event of a reduction in the line voltage.

For a more complete understanding of my invention, reference should be had to the accompanying drawings wherein I have shown diagrammatically in Fig. 1 my invention applied to a motor starting switch. Fig. 2 illustrates the switch in the starting position, while Fig. 3 illustrates the switch in the running position.

Referring to the drawings, I have shown my invention in one form as applied to a motor starting switch 10 provided with an operating handle 12 normally biased to the off position by the compression springs 13 and 14. In order to start an alternating-current motor 15, the operating handle 12 of the switch is moved in a counter-clockwise direction to the starting position to apply a starting voltage to the motor 15 which is substantially less than the voltage of the supply lines 18. The detail connections involved and the starting compensator transformer are not shown in detail since switches of this character are well understood to those skilled in the art.

Continuing with the description of my invention, as the handle 12 is moved to the starting position shown in Fig. 2, a lever 20 operated with the handle 12 is moved against a cam surface 22 provided on a latching lever 23, thereby rotating it in a clockwise direction about its pivot pin 24. Secured to the latching lever 23 by pivot pin 26 is a link 27 arranged to be moved into engagement with a magnetizable armature 28 of an electromagnet 29. There is also pivoted at 26 a link 30 connected by a pivot pin 31 to a second link 32 which in turn is pivoted by a pin 33 to form a toggle.

The electromagnet 29 is provided with an operating coil 35 arranged about a magnetizable core 36 secured by a stud 37 to a magnetizable frame 38, the frame 38 and the magnetizable armature 28 being arranged to form a substantially closed magnetic circuit for the electromagnet. The armature 28 is pivoted at 40 and is normally biased by compression spring 42 to its unattracted position and out of engagement with the core 36, as shown in Fig. 1. It is contemplated that the compression spring 42 shall be sufficiently strong to prevent the operation of the armature 28 due to the energization of its operating coil 35. However, as shown in Fig. 2, when the operating handle 12 energizes the motor 15 in starting, the link 27 mechanically operates the armature to the attracted position. The operating coil 35, energized from the secondary winding 44 of a transformer 45, the primary winding 46 of which is connected across a pair of motor leads 47 and 48, maintains the armature in its attracted position as shown in Fig. 3. This circuit may be traced from one side of the secondary winding 44 by conductor 50, normally closed push button 52, conductor 53, a rectifier 54, conductor 55, contacts of an overload protective device 56, conductor 57, operating coil 35, and by conductor 58 to the other side of the secondary winding 44. By means of an adjusting screw 60 secured to the link 27 the distance that the link 27 moves the armature 28 can be varied.

As soon as the motor 15 accelerates a predetermined amount, the handle 12 is quickly moved from the "start" position to the "run" position. During this movement the link 27, guided by the pin 61 and the slot 62, the pin 61 being mounted in a block 61*a* supported from the casing, is withdrawn out of the path of the armature 28 and is moved to the position shown in Fig. 3. The spring 63 encircling the pivot pin 33 biases the toggle links 30 and 32 to their made position. It will be observed in Fig. 3 that the knee 31 of the toggle is operated slightly beyond center against an adjustable stop 67. Consequently the latch-

ing lever 23 is rigidly held in a position to prevent the return movement of the lever 20 by the compression spring 14 since the component of for force exerted by the lever 20 on the inclined surface 69 of the latching lever 23 cannot break the toggle.

In the case of a substantial dip in the supply voltage, the energization of the coil 35 will of course be decreased. The normal value of flux in the magnetic circuit however tends to maintain itself by the generation of a current in the coil 35 which current flows through a closed circuit which may be traced from one side of the coil by conductor 58, transformer secondary winding 44, conductor 50, normally closed push button 52, conductor 53, rectifier 54, conductor 55, contacts of the overload relay 56, and by conductor 57 to the other side of the coil. The time required for the decay of the flux is further increased by the provision of a single turn short-circuited winding 70 disposed about the core 36. I have found in practice that in the case of a substantial voltage dip from three to five seconds are required before the magnetic flux decays an amount sufficient to permit the spring 42 to operate the armature to its unattracted position.

Assuming now that a decay of the magnetic flux has decreased the attractive effort of the magnet 29 below the effort of the spring 42, it will be observed by referring to Fig. 3 that the armature 28 accelerates through a short distance and then strikes a blow against one end 72 of the toggle link 32 thereby rotating the knee 31 of the toggle over center and permitting the compression spring 14 to operate the switch 10 to the open circuit position.

In case an overload should occur on the motor or a short circuit should exist in the switch 10, the overload relay 56 energized from the current transformer 74 operates to deenergize the operating coil 35. The armature 28 accordingly is operated to break the toggle in a much shorter interval of time than in the case of a dip in voltage because the normally closed circuit for the coil 35 is interrupted.

The switch can also be operated to its open circuit position by means of a tripping button 76 arranged to operate a rod 77 against the toggle link 30 to break the toggle. The normally closed push button 52 may be located at a point distant from the switch for the remote control of the switch.

While I have shown a particular embodiment of my invention, it will be understood of course that I do not wish to be limited thereto since many modifications may be made, and I therefore contemplate by the appended claims to cover any such modifications as fall within the true spirit and scope of my invention.

What I claim as new and desire to secure by Letters Patent of the United States, is:

1. In combination, a switch biased to open position, means for holding the switch in the closed position comprising a relatively movable member operable into engagement with the switch in the circuit closing position and arranged to be moved by the switch upon operation thereof from the circuit closing position, locking means for said member for preventing said movement by said switch, an electromagnet provided with an armature and a normally closed magnetic circuit, means for biasing said armature from an attracted position into operative position with said locking means, means including a rectifier for energizing said electromagnet through a normally closed electrical circuit, and means for mechanically moving said armature to said attracted position, whereby said electromagnet maintains said armature in said attracted position a predetermined time interval after a reduction in its energization.

2. The combination with a switch normally biased to an open circuit position, a latching member for restraining said switch in closed circuit position, a toggle operable to an over-set position and connected to said latching member to hold said switch in said closed circuit position, of timing means for tripping said toggle comprising an electromagnet provided with a closed magnetic circuit, an armature for said electromagnet normally biased to trip said toggle, means for delaying movement of said armature in case of a predetermined reduction in voltage of the circuit comprising a rectifier normally connected in circuit with said electromagnet to provide a closed current path for said electromagnet thereby delaying the decay of the flux of said magnet and circuit interrupting means for opening said closed current path and thereby cause immediate movement of said armature.

3. In combination, a switch biased to move from a closed circuit position to an open circuit position, a latching member disposed in the path of said switch and arranged to be operated therefrom by movement of the switch in accordance with its bias, a toggle connected to said member and arranged when overset to hold the member in the path of the switch and thereby prevent movement of the switch from the closed circuit position, an electromagnet provided with an armature, means for biasing said armature into engagement with said toggle to trip the toggle, said magnet being provided with a substantially closed magnetic circuit, a normally short-circuited coil on said magnet for delaying the decay of flux of said magnet, and means for energizing said electromagnet including a rectifier connected in closed circuit therewith whereby a substantial time interval is introduced before the armature of said magnet is operated to trip said toggle in case of a reduction in value of said voltage and circuit interrupting means for deenergizing said magnet and interrupting said closed circuit so as to cause immediate movement of said armature.

4. In combination, a motor starting switch operable to one position to start the motor and to a second position for normal running operations of the motor, of means for biasing said switch to an open circuit position, latching means for restraining said switch in said second position comprising a toggle arranged to be operated to an overset position, an electromagnet provided with an armature biased into engagement with said toggle to trip said toggle, means operative with said switch as it is moved to said first position for mechanically operating said armature to an attracted position out of engagement with said toggle, and a normally closed energizing circuit including a rectifier for said operating coil whereby said armature is maintained in its attracted position, said magnet being provided with a normally closed magnetic circuit to provide a time interval after a predetermined reduction in its energization whereby momentary dips in line voltage will not effect the opening of said switch.

5. In combination, a switch normally biased to the open circuit position, a latching lever for maintaining said switch in its closed position, a

toggle connected to said latching lever and arranged when overset to prevent operation of said latching lever, means for biasing said toggle to its overset position, an electromagnet provided with an armature, an operating coil and a substantially closed magnetic circuit, a unidirectional device connected in a normally closed electrical circuit with said coil, means for energizing said coil through said device, means for biasing said armature from an attracted position to an unattracted position to trip said toggle, and means for mechanically operating said armature from its unattracted to its attracted position, whereby a time delay is provided before said armature is operated from its attracted to its unattracted position.

6. In combination, a switch normally biased to the open circuit position, a latching lever for maintaining said switch in its closed position a toggle connected to said latching lever and arranged when overset to prevent operation of said latching lever, means for biasing said toggle to its overset position, an electromagnet provided with an armature, an operating coil and a substantially closed magnetic circuit, a unidirectional device connected in a normally closed electrical circuit with said coil, means for energizing said coil through said device, means for biasing said armature from an attracted position to an unattracted position to trip said toggle, means for mechanically operating said armature from its unattracted to its attracted position, whereby a time delay is provided before said armature is operated from its attracted to its unattracted position, and means for mechanically tripping said toggle independently of said electromagnet.

7. In combination, a switch provided with a magnet coil and an armature, means biasing said armature from an attracted position to an unattracted position, manual means for engaging said armature to operate it to its attracted position, means operable by said manual means for completing an energizing circuit for said magnet coil to hold said armature in said attracted position, said manual means thereafter being operable out of engagement with said armature.

8. In combination, a switch provided with a magnet coil and an armature, means biasing said armature from an attracted to an unattracted position, manual means operable into and out of engagement with said armature to move said armature against its bias to said attracted position, control means operable by said manual means for completing an energizing circuit for said magnet coil to hold said armature in said attracted position, and timing means for delaying operation of said armature from said attracted to said unattracted position.

9. In combination, a switch provided with a magnet coil and an armature, means biasing said armature from an attracted to an unattracted position, manual means operable into and out of engagement with said armature to move said armature against its bias to said attracted position, control means operable by said manual means for completing an energizing circuit for said magnet coil to hold said armature in said attracted position, timing means for delaying operation of said armature from said attracted to said unattracted position, and means operable at will for causing immediate operation of said armature without time delay from said attracted to said unattracted position.

JOSEPH W. OWENS.