(12) INTERNATIONAL APPLICATION PUBLISHED UNDER THE PATENT COOPERATION TREATY (PCT)

(19) World Intellectual Property Organization
International Bureau

(43) International Publication Date
08 October 2020 (08.10.2020)

WIPO | PCT

(10) International Publication Number
WO 2020/205742 A1

(51) International Patent Classification:
G16H 40/20 (2018.01)

(21) International Application Number:
PCT/US2020/025731

(22) International Filing Date:
30 March 2020 (30.03.2020)

(25) Filing Language: English

(26) Publication Language: English

(30) Priority Data:
16/370,951 30 March 2019 (30.03.2019) US

(71) Applicant: **ABIOMED, INC.** [US/US]; 22 Cherry Hill Drive, Danvers, Massachusetts 01923 (US).

(72) Inventors: **AGNELLO, Alessandro Simone**; c/o Abiomed, Inc. 22 Cherry Hill Drive, Danvers, Massachusetts 01923 (US). **EICHMANN, Gregory John**; c/o Abiomed, Inc. 22 Cherry Hill Drive, Danvers, Massachusetts 01923 (US). **LEMAY, Paul Roland**; c/o Abiomed, Inc., 22 Cherry Hill Drive, Danvers, Massachusetts 01923 (US).

(74) Agent: **JAKOBSCHE, George** et al.; Sunstein LLP, 100 High Street, Boston, Massachusetts 02110 (US).

(81) Designated States *(unless otherwise indicated, for every kind of national protection available)*: AE, AG, AL, AM, AO, AT, AU, AZ, BA, BB, BG, BH, BN, BR, BW, BY, BZ, CA, CH, CL, CN, CO, CR, CU, CZ, DE, DJ, DK, DM, DO, DZ, EC, EE, EG, ES, FI, GB, GD, GE, GH, GM, GT, HN, HR, HU, ID, IL, IN, IR, IS, JO, JP, KE, KG, KH, KN, KP, KR, KW, KZ, LA, LC, LK, LR, LS, LU, LY, MA, MD, ME, MG, MK, MN, MW, MX, MY, MZ, NA, NG, NI, NO, NZ, OM, PA, PE, PG, PH, PL, PT, QA, RO, RS, RU, RW, SA, SC, SD, SE, SG, SK, SL, ST, SV, SY, TH, TJ, TM, TN, TR, TT, TZ, UA, UG, US, UZ, VC, VN, WS, ZA, ZM, ZW.

(84) Designated States *(unless otherwise indicated, for every kind of regional protection available)*: ARIPO (BW, GH, GM, KE, LR, LS, MW, MZ, NA, RW, SD, SL, ST, SZ, TZ, UG, ZM, ZW), Eurasian (AM, AZ, BY, KG, KZ, RU, TJ,

(54) Title: MEDICAL DEVICE LOCATION AND TRACKING SYSTEM

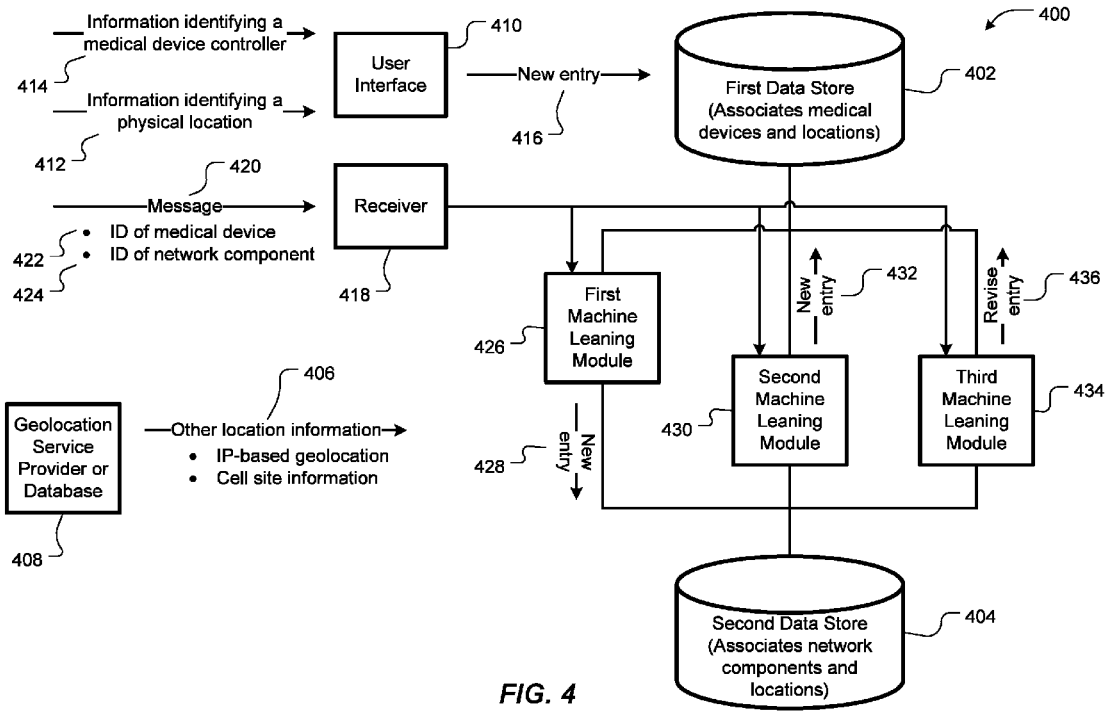

FIG. 4

(57) Abstract: Methods (500) and systems (300, 400) for automatically ascertaining physical location information about a plurality of medical device controllers (100) and tracking changes in the physical locations of ones of the respective medical device controllers. One or more machine learning modules (426, 430, 434) infer the physical locations from computer network messages received from the medical device controllers, including information about computer network components (306, 308, 310, 312) that are proximate ones of the medical device controllers (100).

[Continued on next page]

WO 2020/205742 A1

TM), European (AL, AT, BE, BG, CH, CY, CZ, DE, DK, EE, ES, FI, FR, GB, GR, HR, HU, IE, IS, IT, LT, LU, LV, MC, MK, MT, NL, NO, PL, PT, RO, RS, SE, SI, SK, SM, TR), OAPI (BF, BJ, CF, CG, CI, CM, GA, GN, GQ, GW, KM, ML, MR, NE, SN, TD, TG).

Published:

— *with international search report (Art. 21(3))*

Medical Device Location and Tracking System

CROSS REFERENCE TO RELATED APPLICATIONS

[0001] This application claims the benefit of U.S. Patent Application No. 16/370,951, filed March 30, 2019, titled "Medical Device Location and Tracking System," the entire contents of which are hereby incorporated by reference herein, for all purposes.

BACKGROUND

TECHNICAL FIELD

[0002] The present invention relates to medical device location and tracking systems and, more particularly, to machine learning-based systems that automatically associate network identifiers used by medical devices to report status information with physical locations and thereby automatically detect when the medical devices are moved to other physical locations.

RELATED ART

[0003] Many medical devices, such as some implanted heart pumps, for example the Impella® 2.5 hear pump available from Abiomed, Inc., Danvers, MA, are connected to external controllers that collect and display operational data about the medical devices, such as heart signal level, battery temperature, blood flow rate and plumbing integrity. Exemplary controllers are available from Abiomed, Inc. under the trade name Automated Impella Controller®. The controllers raise alarms when operational data values fall beyond predetermined values or ranges, for example if a leak or loss of suction is detected. These controllers include video display screens as human interfaces, on which the operational data and/or alarms are displayed.

[0004] To facilitate remote monitoring by medical personnel to ensure efficacy and patient safety, some such controllers may be coupled via computer networks, often including wireless segments, to central servers, which may be accessed by monitoring stations. The monitoring stations

may display real-time and/or historical operational data and/or alarms on display screens for viewing by the medical personnel.

[0005] Many such controllers are expensive and/or in short supply in hospitals and other healthcare facilities. Consequently, as these controllers become available, such as after a heart pump is removed from a patient, these organizations often move these controllers to where the controllers are needed, including moving the controllers among floors of a building, between buildings on a campus and between campuses. In addition, sometimes these controllers are moved along with patients, while attached medical devices are still connected to the patients, such as if a patient is moved from an operating room to an intensive care unit.

[0006] However, this movement causes problems for the medical personnel who remotely monitor the controllers and their attached medical devices. Although the user interfaces of some controllers facilitate entering location information, such information is not always entered when the controllers are moved, and sometimes the information is entered incorrectly. Thus, if a controller is moved, for example from one room or floor or building to another, the medical personnel remotely monitoring the controller may have no way to learn of the new location.

[0007] Lack of, or incorrect, information about the physical location of a controller can jeopardize patient safety. For example, if the medical personnel remotely monitoring an implanted heart pump become aware of an unsafe condition, such as because the corresponding controller raises an alarm, but the medical personnel do not know the (correct) location, such as room number, where the patient with the implanted heart pump is currently located, the medical personnel cannot quickly dispatch a nurse, doctor or technician, as the case may be, to the patient.

SUMMARY OF EMBODIMENTS

[0008] An embodiment of the present invention provides a medical device controller location and tracking system. The system includes a first electronic data store, a second electronic data store, a user interface and a first machine learning module.

[0009] The first electronic data store is configured to store a plurality of first entries. Each first entry contains information that associates a respective medical device controller with a

respective physical location. The second electronic data store is configured to store a plurality of second entries. Each second entry contains information that associates a respective computer network device with a respective physical location.

[0010] The user interface is configured to receive information identifying an identified medical device controller. The information identifying the identified medical device controller may be entered by a human, or the information identifying the identified medical device controller may be automatically ascertained, without human input into the user interface. The user interface is also configured to receive information, from a human user, identifying an entered physical location of the identified medical device controller. The user interface is configured to store a new first entry in the first electronic data store. The new first entry associates the identified medical device controller with the entered physical location.

[0011] The receiver is configured to receive messages from a plurality of medical device controllers. The receiver is configured to receive the messages via a computer network. Each message is sent by a respective sender medical device controller of the plurality of medical device controllers. Each message includes an identifier of the sender medical device controller. Each message also includes an identifier of a computer network device.

[0012] The first machine learning module is configured, in response to receipt of ones of the messages, to automatically determine whether an entry in the first electronic data store associates the sender medical device controller with a respective physical location. In other words, the first machine learning module is configured to automatically determine whether the first electronic data store contains such an association, not whether the sender medical device controller is associated with a particular physical location. If an entry in the first electronic data store is found that associates the sender medical device controller with a respective physical location, the first machine learning module is configured to store a new second entry in the second electronic data store. The new second entry associates the computer network device with the physical location associated with the sender medical device controller.

[0013] In any embodiment, the identifier of the computer network device may identify a computer network device with which the sender medical device controller has communicated. The identifier of the computer network device may identify a computer network device with which the

sender medical device controller has directly communicated wirelessly. The identifier of the computer network device may identify a wireless access point with which the sender medical device controller has directly communicated wirelessly. The identifier of the computer network device may include a base station identifier of a cellular base station with which the sender medical device controller has directly communicated wirelessly. The identifier of the computer network device may identify a computer network device through which the message traveled en route to the receiver. The identifier of the computer network device may include an IP address.

[0014] In any embodiment, the medical device controller location and tracking system may include a second machine learning module. The second machine learning module may be configured, in response to receipt of ones of the messages, to automatically determine whether an entry in the first electronic data store associates the sender medical device controller with a respective physical location. If no entry in the first electronic data store is found that associates the sender medical device controller with a respective physical location, the second machine learning module may be configured to determine whether an entry in the second electronic data store associates the computer network device with a respective physical location.

[0015] If no entry in the first electronic data store is found that associates the sender medical device controller with a respective physical location and an entry in the second electronic data store is found that associates the computer network device with a respective physical location, the second machine learning module may be configured to store a new first entry in the first electronic data store. The new first entry may associate the sender medical device controller with the physical location associated with the computer network device.

[0016] In any embodiment, the medical device controller location and tracking system may include a third machine learning module. The third machine learning module may be configured, in response to receipt of ones of the messages, to automatically determine whether an entry in the first electronic data store associates the sender medical device controller with a respective physical location. If an entry in the first electronic data store is found that associates the sender medical device controller with a respective physical location, the third machine learning module may be configured to determine whether an entry in the second electronic data store associates the computer network device with a respective physical location.

[0017] If an entry in the first electronic data store is found that associates the sender medical device controller with a respective physical location and an entry in the second electronic data store is found that associates the computer network device with a respective physical location, the third machine learning module may be configured to compare the physical location associated with the sender medical device controller in the first electronic data store to the physical location associated with the computer network device in the second electronic data store.

[0018] If an entry in the first electronic data store is found that associates the sender medical device controller with a respective physical location and an entry in the second electronic data store is found that associates the computer network device with a respective physical location and the physical location associated with the sender medical device controller in the first electronic data store is found to differ from the physical location associated with the computer network device in the second electronic data store, the third machine learning module may be configured to revise the entry in the first electronic data store to associate the sender medical device controller with the physical location associated with the computer network device in the second electronic data store.

[0019] In any embodiment, the third machine learning module may be configured to temporarily revise the entry in the first electronic data store to associate the sender medical device controller with the physical location associated with the computer network device in the second electronic data store. The third machine learning module may be further configured to automatically subsequently revise the entry in the first electronic data store to associate the sender medical device controller with a default value.

[0020] Another embodiment of the present invention provides a medical device controller location and tracking system. The system includes a first electronic data store, a second electronic data store, a receiver and a second machine learning module.

[0021] The first electronic data store is configured to store a plurality of first entries. Each first entry contains information that associates a respective medical device controller with a respective physical location. The second electronic data store configured to store a plurality of second entries Each second entry contains information that associates a respective computer network device with a respective physical location.

[0022] The receiver is configured to receive messages from a plurality of medical device controllers. The receiver is configured to receive the messages via a computer network. Each message is sent by a respective sender medical device controller of the plurality of medical device controllers. Each message includes an identifier of the sender medical device controller. Each message also includes an identifier of a computer network device.

[0023] The second machine learning module is configured, in response to receipt of ones of the messages, to automatically determine whether an entry in the first electronic data store associates the sender medical device controller with a respective physical location. If no entry in the first electronic data store is found that associates the sender medical device controller with a respective physical location, the second machine learning module is configured to automatically determine whether an entry in the second electronic data store associates the computer network device with a respective physical location.

[0024] If no entry in the first electronic data store is found that associates the sender medical device controller with a respective physical location and an entry in the second electronic data store is found that associates the computer network device with a respective physical location, the second machine learning module is configured to automatically store a new first entry in the first electronic data store. The new first entry associates the sender medical device controller with the physical location associated with the computer network device.

[0025] Yet another embodiment of the present invention provides a medical device controller location and tracking system. The system includes a first electronic data store, a second electronic data store, a receiver and a third machine learning module.

[0026] The first electronic data store is configured to store a plurality of first entries. Each first entry contains information that associates a respective medical device controller with a respective physical location. The second electronic data store is configured to store a plurality of second entries. Each second entry contains information that associates a respective computer network device with a respective physical location.

[0027] The receiver is configured to receive messages from a plurality of medical device controllers. The receiver is configured to receive the messages via a computer network. Each message is sent by a respective sender medical device controller of the plurality of medical device

controllers. Each message includes an identifier of the sender medical device controller. Each message also includes an identifier of a computer network device.

[0028] The third machine learning module is configured, in response to receipt of ones of the messages, to automatically determine whether an entry in the first electronic data store associates the sender medical device controller with a respective physical location. If an entry in the first electronic data store is found that associates the sender medical device controller with a respective physical location, the third machine learning module is configured to determine whether an entry in the second electronic data store associates the computer network device with a respective physical location.

[0029] If an entry in the first electronic data store is found that associates the sender medical device controller with a respective physical location and an entry in the second electronic data store is found that associates the computer network device with a respective physical location, the third machine learning module is configured to compare the physical location associated with the sender medical device controller in the first electronic data store to the physical location associated with the computer network device in the second electronic data store.

[0030] If an entry in the first electronic data store is found that associates the sender medical device controller with a respective physical location and an entry in the second electronic data store is found that associates the computer network device with a respective physical location and the physical location associated with the sender medical device controller in the first electronic data store is found to differ from the physical location associated with the computer network device in the second electronic data store, the third machine learning module is configured to revise the entry in the first electronic data store to associate the sender medical device controller with the physical location associated with the computer network device in the second electronic data store.

[0031] An embodiment of the present invention provides a method for locating and tracking medical device controllers. The method includes providing first and second electronic data stores. The first electronic data store is configured to store a plurality of first entries. Each first entry contains information that associates a respective medical device controller with a respective physical location. The second electronic data store is configured to store a plurality of second

entries. Each second entry contains information that associates a respective computer network device with a respective physical location.

[0032] Information identifying an identified medical device controller is received.

[0033] Information identifying an entered physical location of the identified medical device is received from a human user, via a user interface.

[0034] A new first entry is stored in the first electronic data store The new first entry associates the identified medical device controller with the entered physical location.

[0035] A message is received from a sender medical device controller. The message is received via a computer network. The message includes an identifier of the sender medical device controller. The message also includes an identifier of a computer network device.

[0036] In response to receipt of the message, a determination is automatically made to ascertain whether an entry in the first electronic data store associates the sender medical device with a respective physical location. If an entry in the first electronic data store is found that associates the sender medical device controller with a respective physical location, a new second entry is stored in the second electronic data store. The new second entry associates the computer network device with the physical location associated with the sender medical device controller.

[0037] In any embodiment, receiving the message that includes the identifier of the computer network device may include receiving a message that identifies a computer network device with which the sender medical device controller has communicated. In any embodiment, receiving the message that includes the identifier of the computer network device may include receiving a message that identifies a computer network device with which the sender medical device controller has directly communicated wirelessly. In any embodiment, receiving the message that includes the identifier of the computer network device may include receiving a message that identifies a wireless access point with which the sender medical device controller has directly communicated wirelessly. In any embodiment, receiving the message that includes the identifier of the computer network device may include receiving a message that identifies a base station identifier of a cellular base station with which the sender medical device controller has directly communicated wirelessly. In any embodiment, receiving the message that includes the identifier of

the computer network device may include receiving a message that identifies a computer network device through which the message traveled en route to the receiver. In any embodiment, receiving the message that includes the identifier of the computer network device may include receiving a message that identifies an IP address.

[0038] In any embodiment, in response to receipt of the message, a determination may be automatically made to ascertain whether an entry in the first electronic data store associates the sender medical device controller with a respective physical location. If no entry in the first electronic data store is found that associates the sender medical device controller with a respective physical location, a determination may be automatically made to ascertain whether an entry in the second electronic data store associates the computer network device with a respective physical location.

[0039] If no entry in the first electronic data store is found that associates the sender medical device controller with a respective physical location and an entry in the second electronic data store is found that associates the computer network device with a respective physical location, a new first entry may be stored in the first electronic data store. The new first entry may associate the sender medical device controller with the physical location associated with the computer network device.

[0040] In any embodiment, in response to receipt of the message, a determination may be automatically made to ascertain whether an entry in the first electronic data store associates the sender medical device controller with a respective physical location. If an entry in the first electronic data store is found that associates the sender medical device controller with a respective physical location, a determination may be automatically made to ascertain whether an entry in the second electronic data store associates the computer network device with a respective physical location.

[0041] If an entry in the first electronic data store is found that associates the sender medical device controller with a respective physical location and an entry in the second electronic data store is found that associates the computer network device with a respective physical location, the physical location associated with the sender medical device controller in the first electronic data

store maybe compared to the physical location associated with the computer network device in the second electronic data store.

[0042] If an entry in the first electronic data store is found that associates the sender medical device controller with a respective physical location and an entry in the second electronic data store is found that associates the computer network device with a respective physical location and the physical location associated with the sender medical device controller in the first electronic data store is found to differ from the physical location associated with the computer network device in the second electronic data store, the entry in the first electronic data store may be revised to associate the sender medical device controller with the physical location associated with the computer network device in the second electronic data store.

[0043] In any embodiment, revising the entry in the first electronic data store to associate the sender medical device controller with the physical location associated with the computer network device in the second electronic data store may include temporarily revising the entry in the first electronic data store to associate the sender medical device controller with the physical location associated with the computer network device in the second electronic data store, and then automatically revising the entry in the first electronic data store to associate the sender medical device controller with a default value.

[0044] Yet another embodiment of the present invention provides a non-transitory computer-readable medium. The non-transitory computer-readable medium is encoded with instructions. When executed by a processor, the instructions establish processes for performing a computer-implemented method for locating and tracking medical device controllers. The processes include a process configured to provide a first electronic data store and a process configured to provide a second electronic data store.

[0045] The first electronic data store is configured to store a plurality of first entries. Each first entry contains information that associates a respective medical device controller with a respective physical location. The second electronic data store is configured to store a plurality of second entries. Each second entry contains information that associates a respective computer network device with a respective physical location.

[0046] A process is configured to receive information identifying an identified medical device controller.

[0047] A process configured to receive information identifying an entered physical location of the identified medical device. The process is configured to receive the information from a human user, via a user interface.

[0048] A process is configured to store a new first entry in the first electronic data store. The new first entry associates the identified medical device controller with the entered physical location.

[0049] A process is configured to receive a message from a sender medical device controller. The process is configured to receive the message via a computer network. The message includes an identifier of the sender medical device controller. The message also includes an identifier of a computer network device.

[0050] A process is configured, in response to receipt of the message, to automatically determine whether an entry in the first electronic data store associates the sender medical device with a respective physical location.

[0051] A process configured, if an entry in the first electronic data store is found that associates the sender medical device controller with a respective physical location, to store a new second entry in the second electronic data store, wherein the new second entry associates the computer network device with the physical location associated with the sender medical device controller.

BRIEF DESCRIPTION OF THE DRAWINGS

[0052] The invention will be more fully understood by referring to the following Detailed Description of Specific Embodiments in conjunction with the Drawings, of which:

[0053] FIG. **1** is a perspective view of an exemplary convention medical device controller and an exemplary conventional medical device, in this example a heart pump, coupled to the medical device controller, according to the prior art.

[0054] FIG. **2** shows exemplary hypothetical display screen contents that may be displayed on a screen of the medical device controller of FIG. **1**, according to the prior art.

[0055] FIG. **3** is a schematic block diagram of major components of a medical device location and tracking system for locating and tracking medical device controllers, such as the medical device controller of FIGS. **1** and **2**, according to an embodiment of the present invention.

[0056] FIG. **4** is a diagram schematically illustrating components of a server of FIG. **3** and operations performed by the server, according to an embodiment of the present invention.

[0057] FIGS. **5A-5C** (collectively, FIG. **5**) form a flowchart schematically illustrating operations performed by the server components of FIG. **4**, including operations performed by a first machine learning module (FIG. **5A**), operations performed by a second machine learning module (FIG. **5B**) and operations performed by a third machine learning module (FIG. **5C**), according to respective embodiments of the present invention.

[0058] FIG. **6** shows an exemplary hypothetical user interface displayed on the display screen that may be implemented by a medical device controller of FIG. **1** to provide medical device location information to the server of FIGS. **3-5**, according to an embodiment of the present invention.

[0059] FIG. 7 shows an exemplary hypothetical user interface displayed on a display screen that may be implemented by a monitoring station of FIG. **1** to provide medical device location information to the server of FIGS. **3-5**, according to an embodiment of the present invention.

DETAILED DESCRIPTION OF SPECIFIC EMBODIMENTS

[0060] Embodiments of the present invention provide methods and systems for automatically ascertaining physical location information about a plurality of medical device controllers and tracking changes in the physical locations of ones of the respective medical device controllers. These embodiments utilize one or more machine learning modules to infer the physical locations from computer network messages received from the medical device controllers, including information about computer network components that are proximate ones of the medical device controllers.

Context

[0061] FIG. **1** is a perspective view of an exemplary convention medical device controller **100** and an exemplary conventional medical device **102**, in this example a heart pump, coupled to the medical device controller **100**. In the example shown in FIG. **1**, the medical device controller **100** is an Automated Impella Controller® from Abiomed, Inc., Danvers, MA, and the heart pump **102** is an Impella® 2.5 heart pump, also available from Abiomed, Inc., although any suitable medical device and controller may be used. In some cases, the medical device and its associated medical device controller are combined. Such a combination is referred to herein simply as a medical device controller.

[0062] The medical device controller **100** includes a display screen **104**, on which the medical device controller **100** displays operational data about the medical device **102**, such as heart signal level, battery temperature, blood flow rate and plumbing integrity. As discussed in more detail herein, the medical device controller **100** may be connected to a computer network and thereby send images of contents displayed on the screen **104** to a remote server (not shown).

[0063] FIG. **2** shows exemplary hypothetical display screen contents **200** that may be displayed on the screen **104** of the medical device controller **100** of FIG. **1**. For example, the display screen contents may include a heart pump type ("Impella 5.0") **202**, a heart pump serial number ("120703") **204**, a warning/error message **206**, date and time **208**, controller software version number **210**, power source icon **212**, a placement signal **214**, a present heart pump speed (performance) setting ("P-0") **216**, a heart pump motor current value **218**, a current or average blood flow rate **220** and minimum and maximum blood flow rates **222**, as well as various graphs **224**. The display screen contents **200** are typically pixelated.

Major components

[0064] FIG. **3** is a schematic diagram of major components of a medical device location and tracking system **300**. The system **300** may collect, store and retrieve operational data from and about a plurality of medical device controllers **100**. In addition, the system **300** locates and tracks locations of the medical device controllers **100**, as each medical device controller **100** is moved from one physical location to another.

[0065] For simplicity, only medical device controllers **100**, and not separate medical devices, are shown in FIG. **3**. Although only four medical device controllers **100** are shown, other numbers of medical device controllers **100** may be used. Each medical device controller **100** is connectable to a computer network **302**, optionally via a remote link module **304**. The computer network **302** may include wired and/or wireless segments and/or networks, such as wireless networks that conform to an IEEE 802.11x standard (wireless local area networks (WLANs), commonly referred to as "Wi-Fi"), represented by a wireless access point **306**, and/or cellular networks, represented by a cell site **308**. The computer network **302** may include private and/or public networks, such as a local area network (LAN) **310**, such as an Ethernet network, connected via a router **312**, and/or metropolitan area networks (MANs) and/or wide area networks (WANs), such as the Internet (not shown).

[0066] Each medical device controller **100** is configured to automatically repeatedly capture status information about the medical device connected thereto and display the status information on a display screen **104** (FIG. 1). As noted, FIG. **2** shows respective hypothetical display screen contents **200** that may be displayed on the screen **104** of any given medical device controller **100**.

[0067] A server **314** is configured to automatically periodically or occasionally request and receive an image of the contents displayed on the screen **104** of each medical device controller **100**, typically about every 20 seconds. The request and the image are sent via the computer network **302**. The image may be sent in one or more messages encoded as a video frame or a sequence of video frames. The video frame(s) may, for example, contain pixelated copies of images displayed on the display screens **104** of the medical device controllers **100**.

[0068] The server **314** is configured to process the received frames (images). The server **314** parses the images and extracts textual information, such as heart pump serial number, blood flow rate, warning message text and the like, by optical character recognizing (OCR) portions of the images. The server **314** may also parse the images and extract graphical information, such as a power source icon, and compare this graphical information to predetermined pixel patterns and/or colors. The server **314** may include an OCR engine, or the server **314** may communicate with an external OCR engine **316**, such as via the computer network **302**. The server **314** may then use the recognized text to automatically ascertain serial numbers or other identifiers of the medical device

controllers **100**, operating parameters of the medical device controllers **100**, whether an alarm has been raised by one of the medical device controllers **100**, etc.

[0069] A data store **318** is configured to store one or more media files, and in particular frames (images), such as MP4 video or other suitable types of media files, and the server **314** is configured to automatically store received frames (images) in the data store **318**. The data store **318** records the screen images received by the server **314** for later playback, such as in response to requests from one of several monitoring stations **320**. Only two monitoring stations **320** are shown for simplicity, however any number of monitoring stations **320** may be included. The monitoring stations **320** may use cloud-based technology to securely and remotely display images of the medical device controller **100** screens **104** to physicians and hospital staff anywhere with Internet connectivity. An exemplary remote monitoring system is available under the trade name Impella Connect® online device management system, available from Abiomed, Inc., Danvers, MA.

[0070] The data store **318** is configured to provide a requested portion of the stored media file in response to a provision request. The data store **318** thereby supports playback of the medical device controller **100** status information. For example, the data store **318** may provide one or more frames (images) of video stored in the media file, for display by a monitoring station **320** to a user. The server **314** may also be configured to provide status information about one or more of the medical device controllers **100** to ones of the monitoring stations **320**, based on images received by the server **314** in real time and/or based on historical information held in the data store **318**.

[0071] Each monitoring station **320** may display information about a plurality of medical device controllers **100**, including their respective physical locations. As noted, each medical device controller **100** may be moved from one physical location to another, which poses a problem for the medical personnel who view the monitoring stations **320**, if the location information is missing or inaccurate. For example, a user of a monitoring station **320** may command the monitoring station **320** to display information about all medical device controllers **100** within a specified location. However, if location information is missing or incorrect for one or more of the medical device controllers **100**, information about a wrong set of medical device controllers **100** will be displayed to the user.

Automatic physical location inference

[0072] To solve this problem, the server **314** includes components **400** shown schematically in FIG. **4**. Using these components **400**, the server **314** automatically learns physical locations of some or all of the medical device controllers **100** and automatically tracks changes in these physical locations. This process may begin with a user manually entering physical location information about a subset, such as one or more, of the medical device controllers **100**. This information is stored in a first data store **402**, which associates medical device controllers **100** with their respective physical locations. This process is referred to as seeding the first data store **402**.

[0073] From this information, the server **314** infers physical locations of components of the computer network **302**. For example, if the server **314** communicates via the computer network **302** with a medical device controller **100** whose physical location is known, and the communication involves a network component, such as a wireless access point **306** (FIG. 3), that is necessarily proximate the medical device controller **100**, the server **314** stores information in a second data store **404**, which associates network components with their respective physical locations.

[0074] Necessarily proximate does not require any specific proximity. The server **314** may use whatever information is available, and the server **314** may replace known physical location information with more accurate physical location information, as the more accurate physical location information becomes available. For example, the server **314** may initially store physical location information about an Internet protocol (IP) address, such as a physical location associated with an IP network to which the medical device controller **100** is connected, and then later replace that location information with more accurate physical location information about a wireless access point.

[0075] From the physical location information about network components, the server **314** infers physical locations of medical device controllers **100** whose locations are not yet known, or whose physical locations change from their previously known values. For example, if the server **314** communicates with a medical device controller **100** whose physical location is unknown, but the communication involves a network component that is necessarily proximate the medical device controller **100** and the location of the network component is known, the server **314** automatically

infers the physical location of the medical device controller **100** from the physical location of the network component.

[0076] Similarly, if the server **314** communicates with a medical device controller **100** whose physical location is known, but the communication involves a network component that is necessarily proximate the medical device controller **100** and the location of the network component is known with more precision than the physical location of the medical device controller **100**, the server **314** automatically infers a more precise physical location of the medical device controller **100** from the physical location of the network component and the server **314** updates the physical location of the medical device controller **100**.

[0077] Similarly, if the server **314** communicates with a medical device controller **100** whose physical location is known, and the communication involves a network component that is necessarily proximate the medical device controller **100** and the location of the network component is known, but the network component's known location does not match the known location of the medical device controller **100**, the server **314** automatically infers the medical device controller **100** has been moved to a new physical location, and the server **314** infers the new physical location from the physical location of the network component.

[0078] The server **314** may use other sources of physical location information **406**. For example, several commercial vendors provide IP-based geolocation information, which includes physical locations associated with IP addresses. The server **314** may use the IP address, or a portion thereof, from a network message from a medical device controller **100** to automatically ascertain, or at least estimate, the physical location of the medical device controller **100**, or at least the address of an Internet service provider (ISP) who handles network traffic from the medical device controller **100**, by querying such an IP-based geolocation service or database **408**. The well-known Whois Database may be similarly used. Databases of cell sites may be similarly used. Thus, optionally or alternatively, the first and/or second data store **402** and/or **404** may be seeded with information from one or more geolocation service providers or databases **408**.

[0079] FIG. **5** is a flowchart schematically illustrating operations performed by the server **314** to implement a method **500** for locating and tracking medical devices. At **502**, the first electronic data store **402** is provided. The first data store **402** is configured to store a plurality of first

entries. Each first entry contains information that associates a respective medical device controller **100** with a respective physical location. Table **1** lists exemplary hypothetical contents of the first data store **402**, according to an embodiment of the present invention. The left column lists identifiers of medical device controllers **100**, such as serial numbers. The right column lists identifiers of physical locations associated with the respective medical device controllers **100** in the left column.

Table 1: Information associating medical device controllers with physical locations

Medical device controller	Physical location
Controller ID 1	Location 1
Controller ID 2	Location 2
Controller ID 4	Location 1
Controller ID 5	Location 7
...	...

[0080] At **504** (FIG. 5), the second electronic data store **404** is provided. The second data store **404** is configured to store a plurality of second entries. Each second entry contains information that associates a respective computer network component with a respective physical location. Table **2** lists exemplary hypothetical contents of the second data store **404**, according to an embodiment of the present invention. The left column lists identifiers of network components, such as IP or media access control (MAC) addresses of networks or routers (such as local area network **310** or router **312**), service set identifiers (SSIDs) of wireless access points (such as wireless access point **306**), GSM cell identifiers (CIDs) of base transceiver stations (BTSs) or sector of a BTS. The right column lists identifiers of physical locations associated with the respective network components in the left column.

Table 1: Information associating computer network components with physical locations

Computer network component	Physical location
Component ID 1	Location 2
Component ID 2	Location 5
Component ID 3	Location 3
Component ID 5	Location 1
...	...

[0081] At **506** (FIG. 5), information identifying a medical device controller (an "identified medical device controller") is received, and at **508**, information identifying a physical location (an "entered physical location") of the identified medical device is received. As noted, the first data store **402** may be seeded through one or more user entries. The server **314** (FIG. 3) may include a user interface **410** (FIG. 4), through which a user may enter information identifying a physical location of a medical device controller **100** and, optionally, information identifying the medical device controller **100**.

[0082] One embodiment of such a user interface **410** is implemented by the medical device controller **100**. FIG. **6** shows an exemplary user interface **600** displayed on the display screen **104** of a medical device controller **100**. In this embodiment, the display screen **104** is a touch-sensitive screen capable of receiving user inputs, although in other embodiments a physical keyboard may be connected to the medical device controller **100**. The user interface **600** includes a prompt **602** and an area **604** in which the user can enter text that identifies the physical location of the medical device controller **100**. The user interface **600** includes a virtual keyboard **606** on the touch-sensitive display screen **104**, on which the user can make the entry. A hypothetical entry is shown at **608**. The user's input constitutes information identifying a physical location **412** (FIG. **4**) entered into the user interface **410**.

[0083] The user need not enter information identifying the medical device controller **100**, because the medical device controller **100** already stores information, such as its serial number, as

shown on the display screen **104** at **204**. When the medical device controller **100** sends the user's input **608** to the server **314**, the medical device controller **100** also sends its serial number or other identifying information. The serial number or other identifying information constitutes information identifying a medical device controller **414** (FIG. **4**).

[0084] In another embodiment, the user interface **410** is implemented by one of the monitoring stations **320** (FIG. **3**). FIG. **7** shows an exemplary user interface **700** displayed on a display screen **702** of the monitoring station **320**. In this embodiment, the display screen **702** may be a touch-sensitive screen, as in the user interface **600** described with reference to FIG. **6**. Optionally or alternatively, a physical keyboard may be connected to the monitoring station **320**. The user interface **700** includes a prompt **704** and an area **708** in which the user can enter text that identifies the medical device controller **100**, such as the serial number **710** of the medical device controller **100**. The user interface **700** also includes a prompt **712** and an area **714** in which the user can enter text that identifies the physical location of the medical device controller **100**. A hypothetical entry is shown at **716**. The user entries **710** and **716** constitute the information identifying a medical device controller **414** (FIG. **4**) and the information identifying a physical location **412**.

[0085] In yet another embodiment, the user interface **410** is implemented through an administrative console (not shown) communicatively coupled to the server **314**. This administrative console may be implemented by a physical or virtual display and keyboard, a telnet connection from another computer or any other suitable interface.

[0086] Based on the information the user interface **410** collects, i.e., the information **414** identifying the medical device controller **100** and the information **412** identifying a physical location, the user interface **410** stores a new first entry **416** in the first electronic data store **402**, as indicated by operation **510** (FIG. **5**). The new first entry associates the identified medical device controller **100** with the entered physical location, as discussed with respect to Table **1**.

[0087] As noted, the medical device controllers **100** send messages to the server **314** via the computer network **302** to convey images of the display screens **104** on the medical device controllers **100**. These messages include "from" addresses that identify the respective medical device controllers **100**. The medical device controllers **100** may send additional messages to the server **314** via the computer network **302**. These additional messages may contain information

about a network environment the medical device controllers **100** sense. From this information, the server **314** can infer which network component(s) is(are) proximate the medical device controller **100**. The server **314** includes a receiver **418** (FIG. **4**) configured to receive these network messages **420**.

[0088] For example, if a medical device controller **100** is capable of wireless network communication, the medical device controller **100** sends information, such as SSIDs, to the server **314** identifying wireless access points **306** or other wireless infrastructure that is within radio range of the medical device controller **100** and with which the medical device controller **100** can wirelessly communicate. Optionally, this information includes relative or absolute received signal strength indicators (RSSIs), as measured by the medical device controller **100**, for the in-range wireless access points **306** or other wireless infrastructure. Based on the RSSIs, the server **314** can infer relative proximity of the identified wireless access points **306** to the medical device controller **100**, such as based on relative strengths of signals from the various wireless access points **306**, etc.

[0089] In other examples, the medical device controller **100** sends messages to the server **314** identifying other network components, such as routers, switches, etc., with which the medical device controller **100** has communicated. The medical device controller **100** may use tools, such as traceroute, ping, etc. to probe its network environment and automatically determine relative proximity of the network components to the medical device controller **100**. The medical device controller can then send this proximity information, and identifiers of the respective network components, to the server **314**.

[0090] Thus, any message received by the server **314** may include information **422** (FIG. **4**) identifying a sender medical device controller **100** and information **424** identifying a computer network component. This operation is summarized at operation **512** (FIG. **5**), where the server **314** receives, via the computer network **302** a message **420** from a sender medical device controller **100**. The message includes: (a) an identifier **422** of the sender medical device controller **100** and (b) an identifier **424** of a computer network component.

First machine learning module infers location of a network component

[0091] At **514** (FIG. **5**), in response to receipt of the message **420**, the server **314** automatically determines whether an entry in the first electronic data store **402** associates the sender medical device controller **100** with a respective physical location. This test determines whether the first electronic data store **402** contains such an association, not whether the sender medical device controller **100** is associated with a particular physical location. At **516**, if an entry in the first electronic data store **402** is found that associates the sender medical device controller **100** with a respective physical location, control passes to **518**, where a first machine learning module **426** in the server **314** stores a new second entry **428** in the second electronic data store **404**. The new second entry **428** associates the computer network component with the physical location associated with the sender medical device controller **100**, as discussed with respect to Table **2**.

[0092] The identifier **424** of the computer network device may identify a computer network component with which the sender medical device controller **100** has communicated, or with which the sender medical device controller **100** has directly communicated wirelessly. For example, the identifier **424** of the computer network device may identify a wireless access point **306** (FIG. **3**), with which the sender medical device controller **100** has directly communicated wirelessly, or a base station identifier of a cellular base station **308**, with which the sender medical device controller **100** has directly communicated wirelessly. The identifier **424** of the computer network component may identify a computer network component, through which the message **420** traveled en route to the receiver **418**. The identifier **424** of the computer network component may, for example, include an IP address or a MAC address.

Second machine learning module infers location of a medical device controller

[0093] The server **324** may include a second machine learning module **430** (FIG. **4**). The second machine learning module **430** may be configured, in response to receipt of the message **420**, to automatically determine whether an entry in the first electronic data store **402** associates the sender medical device controller **100** (identified by ID **422**) with a respective physical location, as indicated by operation **520** (FIG. **5**).

[0094] If no entry in the first electronic data store **402** is found that associates the sender medical device controller **100** with a respective physical location, control passes from operation **522** to operation **524**, where the server **314** determines whether an entry in the second electronic data store **404** associates the computer network component (identified by ID **424**) with a respective physical location. If no entry in the first electronic data store **402** is found that associates the sender medical device controller **100** with a respective physical location and, at operation **524**, an entry in the second electronic data store **404** is found that associates the computer network component with a respective physical location, control passes from operation **526** to operation **528**, where the second machine learning module **430** stores a new first entry **432** in the first electronic data store **402**. The new first entry **432** associates the sender medical device controller **100** (identified by ID **422**) with the physical location associated with the computer network component (identified by ID **424**). The location of the computer network component is copied from the second data store **404**, as represented by the right column in Table **2**.

Third machine leaning module infers movement of a medical device controller

[0095] The server **324** may include a third machine learning module **434** (FIG. **4**). The third machine learning module **434** may be configured, in response to receipt of the message **420**, to automatically determine whether an entry in the first electronic data store **402** associates the sender medical device controller **100** (identified by ID **422**) with a respective physical location, as indicated by operation **530**. If an entry in the first electronic data store **402** is found that associates the sender medical device controller **100** with a respective physical location, control passes from operation **532** to operation **534**, where the server **314** determines whether an entry in the second electronic data store **404** associates the computer network component (identified by ID **424**) with a respective physical location.

[0096] If an entry in the first electronic data store **402** is found that associates the sender medical device controller **100** with a respective physical location and, at operation **534**, an entry in the second electronic data store **404** is found that associates the computer network component with a respective physical location, control passes from operation **536** to operation **538**. At operation **538**, the server compares the physical location associated with the sender medical device controller **100**

in the first electronic data store **402** to the physical location associated with the computer network device in the second electronic data store **404**.

[0097] If an entry in the first electronic data store **402** is found that associates the sender medical device controller **100** with a respective physical location and an entry in the second electronic data store **404** is found that associates the computer network device with a respective physical location and, at operation **540**, the physical location associated with the sender medical device controller **100** in the first electronic data store **402** is found to differ from the physical location associated with the computer network device in the second electronic data store **404**, at operation **542** the server revises the entry **436** (FIG. **4**) in the first electronic data store **402** to associate the sender medical device controller **100** with the physical location associated with the computer network device in the second electronic data store **404**.

[0098] In some embodiments, at operation **542**, the server only temporarily revises the entry **436** (FIG. **4**) in the first electronic data store **402** to associate the sender medical device controller **100** with the physical location associated with the computer network device in the second electronic data store **404**. Subsequently, such as after a predetermined time, the server revises the entry **436** (FIG. **4**) in the first electronic data store **402** to associate the sender medical device controller **100** with a default location, as indicated at operation **544**.

[0099] In any embodiment, the third machine learning module may be configured to temporarily revise the entry in the first electronic data store to associate the sender medical device controller with the physical location associated with the computer network device in the second electronic data store. The third machine learning module may be further configured to automatically subsequently revise the entry in the first electronic data store to associate the sender medical device controller with a default value.

Implementation

[0100] The server **314**, including the first, second and third machine learning modules **426**, **430** and **434** and the receiver **418**, may be implemented by a processor executing instructions stored in a memory. The instructions may include instructions for implementing the method **500** described

with reference to FIG. **5**, as well as processes to implement the user interfaces described with reference to FIGS. **6** and **7**.

[0101] The first and second data stores **402** and **404** may be implemented with a relational database and may include a front end (load balancer) that distributes access requests across multiple copies of the database to support a high volume of requests.

[0102] In the written description and in the claims, a phrase such as "automatically determine whether an entry in the first electronic data store associates the sender medical device controller (or the network component) with a respective physical location" means determine whether the electronic data store contains such an association, not whether the sender medical device controller (or the network component, as the case may be) is associated with a particular physical location. In such a phrase, "a respective physical location" does not mean a particular physical location, it means any physical location. Thus, the determination does not make a comparison to a particular physical location. Instead, the determination merely tests whether an association currently exists.

[0103] Consequently, if the data store contains information documenting such an association, a result of the determination is TRUE, whereas if the data store does not contain information documenting any such association, the result of the determination is FALSE. The result of the determination may be referenced in a subsequent phrase, such as "if an entry in the electronic data store is found that associates the sender medical device controller (or the network component, as the case may be) with a respective physical location, ..." In such a phrase, "a respective physical location" does not create an antecedent basis or clarity problem, because no particular physical location is being referred to. This phrase is equivalent to "if the previous determination produced a result of TRUE, ..."

[0104] While the invention is described through the above-described exemplary embodiments, modifications to, and variations of, the illustrated embodiments may be made without departing from the inventive concepts disclosed herein. For example, although specific network component identifiers, such as IP addresses and SSIDs, may be recited in relation to disclosed embodiments, within the scope of the invention, the values of all parameters may vary over wide ranges to suit different applications.

[0105] As used herein, including in the claims, the term "and/or," used in connection with a list of items, means one or more of the items in the list, i.e., at least one of the items in the list, but not necessarily all the items in the list. As used herein, including in the claims, the term "or," used in connection with a list of items, means one or more of the items in the list, i.e., at least one of the items in the list, but not necessarily all the items in the list. "Or" does not mean "exclusive or."

[0106] Although aspects of embodiments may be described with reference to flowcharts and/or block diagrams, functions, operations, decisions, etc. of all or a portion of each block, or a combination of blocks, may be combined, separated into separate operations or performed in other orders. References to a "module" are for convenience and not intended to limit its implementation. All or a portion of each block, module or combination thereof may be implemented as computer program instructions (such as software), hardware (such as combinatorial logic, Application Specific Integrated Circuits (ASICs), Field-Programmable Gate Arrays (FPGAs), processor or other hardware), firmware or combinations thereof.

[0107] The server **314**, including the first, second and third machine learning modules **426**, **430** and **434**, the receiver **418**, or portions thereof, may be implemented by one or more processors executing, or controlled by, instructions stored in a memory. Each processor may be a general purpose processor, such as a central processing unit (CPU), a graphic processing unit (GPU), digital signal processor (DSP), a special purpose processor, etc., as appropriate, or combination thereof.

[0108] The memory may be random access memory (RAM), read-only memory (ROM), flash memory or any other memory, or combination thereof, suitable for storing control software or other instructions and data. Instructions defining the functions of the present invention may be delivered to a processor in many forms, including, but not limited to, information permanently stored on tangible non-transitory non-writable storage media (e.g., read-only memory devices within a computer, such as ROM, or devices readable by a computer I/O attachment, such as CD-ROM or DVD disks), information alterably stored on tangible non-transitory writable storage media (e.g., floppy disks, removable flash memory and hard drives) or information conveyed to a computer through a communication medium, including wired or wireless computer networks. Moreover, while embodiments may be described in connection with various illustrative data structures, systems may be embodied using a variety of data structures.

[0109] Disclosed aspects, or portions thereof, may be combined in ways not listed above and/or not explicitly claimed. In addition, embodiments disclosed herein may be suitably practiced, absent any element that is not specifically disclosed herein. Accordingly, the invention should not be viewed as being limited to the disclosed embodiments.

[0110] As used herein, numerical terms, such as "first," "second" and "third," are used to distinguish respective elements from one another and are not intended to indicate any particular order or total number of elements in any particular embodiment. Thus, for example, a given embodiment may include only a second machine learning module and a third machine learning module.

CLAIMS

What is claimed is:

1. A medical device controller location and tracking system (300, 400), the system (300, 400) comprising:

a first electronic data store (402) configured to store a plurality of first entries, wherein each first entry contains information that associates a respective medical device controller (100) with a respective physical location;

a second electronic data store (404) configured to store a plurality of second entries, wherein each second entry contains information that associates a respective computer network device (306, 308, 310, 312) with a respective physical location;

a user interface (410, 600, 700) configured to:

receive: (a) information (204, 414, 710) identifying an identified medical device controller (100) and (b) information (608, 412, 716), from a human user, identifying an entered physical location (608, 412, 716) of the identified medical device controller (100); and

store a new first entry (416) in the first electronic data store (402), wherein the new first entry associates the identified medical device controller (100) with the entered physical location (608, 412, 716);

a receiver (418) configured to receive messages (420), via a computer network (302), from a plurality of medical device controllers, wherein each message (420) is sent by a respective sender medical device controller (100) of the plurality of medical device controllers, and each message (420) includes: (a) an identifier (422) of the sender medical device controller and (b) an identifier (424) of a computer network device (306, 308, 310, 312);

a first machine learning module (426) configured, in response to receipt of ones of the messages (420), to automatically:

determine whether an entry in the first electronic data store (402) associates the sender medical device controller (100) with a respective physical location; and

if an entry in the first electronic data store (402) is found that associates the sender medical device controller (100) with a respective physical location, store a new second entry (428) in the second electronic data store (404), wherein the new second entry (428) associates the computer network device (306, 308, 310, 312) with the physical location associated with the sender medical device controller (100).

2. A system according to claim 1, wherein the identifier (424) of the computer network device identifies a computer network device (306, 308, 310, 312) with which the sender medical device controller (100) has communicated.

3. A system according to any previous claim, wherein the identifier (424) of the computer network device identifies a computer network device (306, 308, 310, 312) with which the sender medical device controller (100) has directly communicated wirelessly.

4. A system according to any previous claim, wherein the identifier (424) of the computer network device identifies a wireless access point (306) with which the sender medical device controller (100) has directly communicated wirelessly.

5. A system according to any previous claim, wherein the identifier (424) of the computer network device comprises a base station identifier of a cellular base station (308) with which the sender medical device controller (100) has directly communicated wirelessly.

6. A system according to any previous claim, wherein the identifier (424) of the computer network device identifies a computer network device (310, 312) through which the message traveled en route to the receiver.

7. A system according to any previous claim, wherein the identifier (424) of the computer network device comprises an IP address.

8. A system according to any previous claim, further comprising a second machine learning module (430) configured, in response to receipt of ones of the messages (420), to automatically:

determine whether an entry in the first electronic data store (402) associates the sender medical device controller (100) with a respective physical location;

if no entry in the first electronic data store (402) is found that associates the sender medical device controller (100) with a respective physical location, determine whether an entry in the second electronic data store (404) associates the computer network device (306, 308, 310, 312) with a respective physical location; and

if no entry in the first electronic data store (402) is found that associates the sender medical device controller (100) with a respective physical location and an entry in the second electronic data store (404) is found that associates the computer network device (306, 308, 310, 312) with a respective physical location, store a new first entry (432) in the first electronic data store (402), wherein the new first entry (432) associates the sender medical device controller (100) with the physical location associated with the computer network device (306, 308, 310, 312).

9. A system according to any previous claim, further comprising a third machine learning module (434) configured, in response to receipt of ones of the messages (420), to automatically:

determine whether an entry in the first electronic data store (402) associates the sender medical device controller (100) with a respective physical location;

if an entry in the first electronic data store (402) is found that associates the sender medical device controller (100) with a respective physical location, determine whether an entry in the second electronic data store (404) associates the computer network device (306, 308, 310, 312) with a respective physical location;

if an entry in the first electronic data store (402) is found that associates the sender medical device controller (100) with a respective physical location and an entry in the second electronic data store (404) is found that associates the computer network device (306, 308, 310, 312) with a respective physical location, compare the physical location associated with the sender medical device controller (100) in the first electronic data store (402) to the physical location associated with the computer network device (306, 308, 310, 312) in the second electronic data store (404); and

if an entry in the first electronic data store (402) is found that associates the sender medical device controller (100) with a respective physical location and an entry in the second electronic data store (404) is found that associates the computer network device (306, 308, 310, 312) with a respective physical location and the physical location associated with the sender medical device controller (100) in the first electronic data store (402) is found to differ from the physical location associated with the computer network device (306, 308, 310, 312) in the second electronic data store (404), revise the entry in the first electronic data store (402) to associate the sender medical device controller (100) with the physical location associated with the computer network device (306, 308, 310, 312) in the second electronic data store (404).

10. A system according to claim 9, wherein the third machine learning module (434) is configured to temporarily revise the entry in the first electronic data store (402) to associate the sender medical device controller (100) with the physical location associated with the computer network device (306, 308, 310, 312) in the second electronic data store (404), and to automatically subsequently revise the entry in the first electronic data store (402) to associate the sender medical device controller (100) with a default value.

11. A medical device controller location and tracking system (300, 400), the system (300, 400) comprising:

a first electronic data store (402) configured to store a plurality of first entries, wherein each first entry contains information that associates a respective medical device controller (100) with a respective physical location;

a second electronic data store (404) configured to store a plurality of second entries, wherein each second entry contains information that associates a respective computer network device (306, 308, 310, 312) with a respective physical location;

a receiver (418) configured to receive messages (420), via a computer network (302), from a plurality of medical device controllers, wherein each message (420) is sent by a respective sender medical device controller (100) of the plurality of medical device controllers, and each message (420) includes: (a) an identifier (422) of the sender medical device controller (100) and (b) an identifier (424) of a computer network device(306, 308, 310, 312); and

a second machine learning module (430) configured, in response to receipt of ones of the messages (420), to automatically:

determine whether an entry in the first electronic data store (402) associates the sender medical device controller (100) with a respective physical location;

if no entry in the first electronic data store (402) is found that associates the sender medical device controller (100) with a respective physical location, determine whether an entry in the second electronic data store (404) associates the computer network device (306, 308, 310, 312) with a respective physical location; and

if no entry in the first electronic data store (404) is found that associates the sender medical device controller (100) with a respective physical location and an entry in the second electronic data store (404) is found that associates the computer network device (306, 308, 310, 312) with a respective physical location, store a new first entry (432) in the first electronic data store (402), wherein the new first entry (432) associates the sender medical device controller (100) with the physical location associated with the computer network device (306, 308, 310, 312).

12. A medical device controller location and tracking system (300, 400), the system (300, 400) comprising:

a first electronic data store (402) configured to store a plurality of first entries, wherein each first entry contains information that associates a respective medical device controller (100) with a respective physical location;

a second electronic data store (404) configured to store a plurality of second entries, wherein each second entry contains information that associates a respective computer network device (306, 308, 310, 312) with a respective physical location;

a receiver (418) configured to receive messages (420), via a computer network (302), from a plurality of medical device controllers, wherein each message (420) is sent by a respective sender medical device controller (100) of the plurality of medical device controllers, and each message (420) includes: (a) an identifier (422) of the sender medical device controller (100) and (b) an identifier (424) of a computer network device (306, 308, 310, 312); and

a third machine learning module (434) configured, in response to receipt of ones of the messages (420), to automatically:

determine whether an entry in the first electronic data store (402) associates the sender medical device controller (100) with a respective physical location;

if an entry in the first electronic data store(402) is found that associates the sender medical device controller (100) with a respective physical location, determine whether an entry in the second electronic data store (404) associates the computer network device (306, 308, 310, 312) with a respective physical location; and

if an entry in the first electronic data store (402) is found that associates the sender medical device controller (100) with a respective physical location and an entry in the second electronic data store (404) is found that associates the computer network device (306, 308, 310, 312) with a respective physical location, compare the physical location associated with the sender medical device controller (100) in the first electronic data store (402) to the physical location associated with the computer network device (306, 308, 310, 312) in the second electronic data store (404); and

if an entry in the first electronic data store (402) is found that associates the sender medical device controller (100) with a respective physical location and an entry in the second electronic data store(404) is found that associates the computer network device (306, 308, 310, 312) with a respective physical location and the physical location associated with the sender medical device controller (100) in the first electronic data store (402) is found to differ from the physical location associated with the computer network device (306, 308, 310, 312) in the second electronic data store (404), revise the entry in the first electronic data store (402) to associate the sender medical device controller (100) with the physical location associated with the computer network device (306, 308, 310, 312) in the second electronic data store (404).

13. A method (500) for locating and tracking medical device controllers (100), the method comprising:

providing (502) a first electronic data store (402) configured to store a plurality of first entries, wherein each first entry contains information that associates a respective medical device controller (100) with a respective physical location;

providing (504) a second electronic data store (404) configured to store a plurality of second entries, wherein each second entry contains information that associates a respective computer network device (306, 308, 310, 312) with a respective physical location;

receiving (506) information (204, 414, 710) identifying an identified medical device controller (100);

receiving (508), from a human user, via a user interface (410, 600, 700), information (608, 412, 716) identifying an entered physical location (608, 412, 716) of the identified medical device controller (100);

storing (510) a new first entry (416) in the first electronic data store (402), wherein the new first entry (416) associates the identified medical device controller (100) with the entered physical location (608, 412, 716);

receiving (512), via a computer network (302), from a sender medical device controller (100), a message (420) that includes: (a) an identifier (422) of the sender medical device controller (100) and (b) an identifier (424) of a computer network device (306, 308, 310, 312);

in response to receipt of the message (420), automatically determining (514) whether an entry in the first electronic data store (402) associates the sender medical device controller (100) with a respective physical location; and

if an entry in the first electronic data store (402) is found (516) that associates the sender medical device controller (100) with a respective physical location, storing (518) a new second entry (428) in the second electronic data store (404), wherein the new second entry (428) associates the computer network device (306, 308, 310, 312) with the physical location associated with the sender medical device controller (100).

14. A method according to claim 13, wherein receiving (512) the message (420) that includes the identifier (424) of the computer network device (306, 308, 310, 312) comprises receiving a message that identifies a computer network device (306, 308, 310, 312) with which the sender medical device controller (100) has communicated.

15. A method according to any previous claim, wherein receiving (512) the message (420) that includes the identifier (424) of the computer network device (306, 308, 310, 312) comprises receiving a message that identifies a computer network device (306, 308, 310, 312) with which the sender medical device controller (100) has directly communicated wirelessly.

16. A method according to any previous claim, wherein receiving (512) the message (420) that includes the identifier (424) of the computer network device (306, 308, 310, 312) comprises receiving a message that identifies a wireless access point (306) with which the sender medical device controller (100) has directly communicated wirelessly.

17. A method according to any previous claim, wherein receiving (512) the message (420) that includes the identifier (424) of the computer network device (306, 308, 310, 312) comprises receiving a message that identifies a base station identifier of a cellular base station (308) with which the sender medical device controller (100) has directly communicated wirelessly.

18. A method according to any previous claim, wherein receiving (512) the message (420) that includes the identifier (424) of the computer network device (310, 312) comprises receiving a message that identifies a computer network device through which the message traveled en route to the receiver.

19. A method according to any previous claim, wherein receiving (512) the message (420) that includes the identifier (424) of the computer network device comprises receiving a message that identifies an IP address.

20. A method according to any previous claim, further comprising, in response to receipt of the message (420), automatically:

determining (520) whether an entry in the first electronic data store (402) associates the sender medical device controller (100) with a respective physical location;

if (522) no entry in the first electronic data store (402) is found that associates the sender medical device controller (100) with a respective physical location, determining (524) whether an entry in the second electronic data store (404) associates the computer network device (306, 308, 310, 312) with a respective physical location; and

if (520) no entry in the first electronic data store (402) is found that associates the sender medical device controller (100) with a respective physical location and an entry in the second electronic data store (404) is found (526) that associates the computer network device (306, 308, 310, 312) with a respective physical location, storing (528) a new first entry (432) in the first electronic data store (402), wherein the new first entry (432) associates the sender medical device controller (100) with the physical location associated with the computer network device (306, 308, 310, 312).

21. A method according to any previous claim, further comprising, in response to receipt of the message (420), automatically:

determining (530) whether an entry in the first electronic data store (402) associates the sender medical device controller (100) with a respective physical location;

if (532) an entry in the first electronic data store (402) is found that associates the sender medical device controller (100) with a respective physical location, determining (534) whether an entry in the second electronic data store (404) associates the computer network device (306, 308, 310, 312) with a respective physical location; and

if (532) an entry in the first electronic data store (402) is found that associates the sender medical device controller (100) with a respective physical location and an entry in the second electronic data store is found (536) that associates the computer network device with a respective physical location, comparing (538) the physical location associated with the sender medical device controller (100) in the first electronic data store (402) to the physical location associated with the computer network device in the second electronic data store; and

if (532) an entry in the first electronic data store (402) is found that associates the sender medical device controller (100) with a respective physical location and an entry in the second electronic data store (404) is found that associates the computer network device with a respective physical location and the physical location associated with the sender medical device controller (100) in the first electronic data store is found to differ (540) from the physical location associated with the computer network device (306, 308, 310, 312) in the second electronic data store (404), revising (542) the entry in the first electronic data store (402) to associate the sender medical device controller (100) with the physical location associated with the computer network device (306, 308, 310, 312) in the second electronic data store (404).

22. A method according to claim 21, wherein revising (542) the entry in the first electronic data store (402) to associate the sender medical device controller (100) with the physical location associated with the computer network device (306, 308, 310, 312) in the second electronic data store(404) comprises:

temporarily revising the entry in the first electronic data store(402) to associate the sender medical device controller (100) with the physical location associated with the computer network device (306, 308, 310, 312) in the second electronic data store (404); and

subsequently automatically revising (544) the entry in the first electronic data store (402) to associate the sender medical device controller (100) with a default value.

23. A non-transitory computer-readable medium encoded with instructions that, when executed by a processor, establish processes for performing a computer-implemented method (500) for locating and tracking medical device controllers, the processes comprising:

a process configured to provide (502) a first electronic data store (402) configured to store a plurality of first entries, wherein each first entry contains information that associates a respective medical device controller (100) with a respective physical location;

a process configured to provide (504) a second electronic data store (404) configured to store a plurality of second entries, wherein each second entry contains information that associates a respective computer network device (306, 308, 310, 312) with a respective physical location;

a process configured to receive (506) information (204, 414, 710) identifying an identified medical device controller (100);

a process configured to receive(508), from a human user, via a user interface (410, 600, 700), information (608, 412, 716) identifying an entered physical location of the identified medical device controller (100);

a process configured to store (510) a new first entry (416) in the first electronic data store (402), wherein the new first entry (416) associates the identified medical device controller (100) with the entered physical location;

a process configured to receive (512), via a computer network (302), from a sender medical device controller (100), a message (420) that includes: (a) an identifier (422) of the sender medical device controller (100) and (b) an identifier (424) of a computer network device (306, 308, 310, 312);

a process configured, in response to receipt of the message (420), to automatically determine (514) whether an entry in the first electronic data store (402) associates the sender medical device controller (100) with a respective physical location; and

a process configured, if an entry in the first electronic data store is found that associates the sender medical device controller (100) with a respective physical location, to store (518) a new second entry (428) in the second electronic data store (404), wherein the new second entry (428) associates the computer network device (306, 308, 310, 312) with the physical location associated with the sender medical device controller (100).

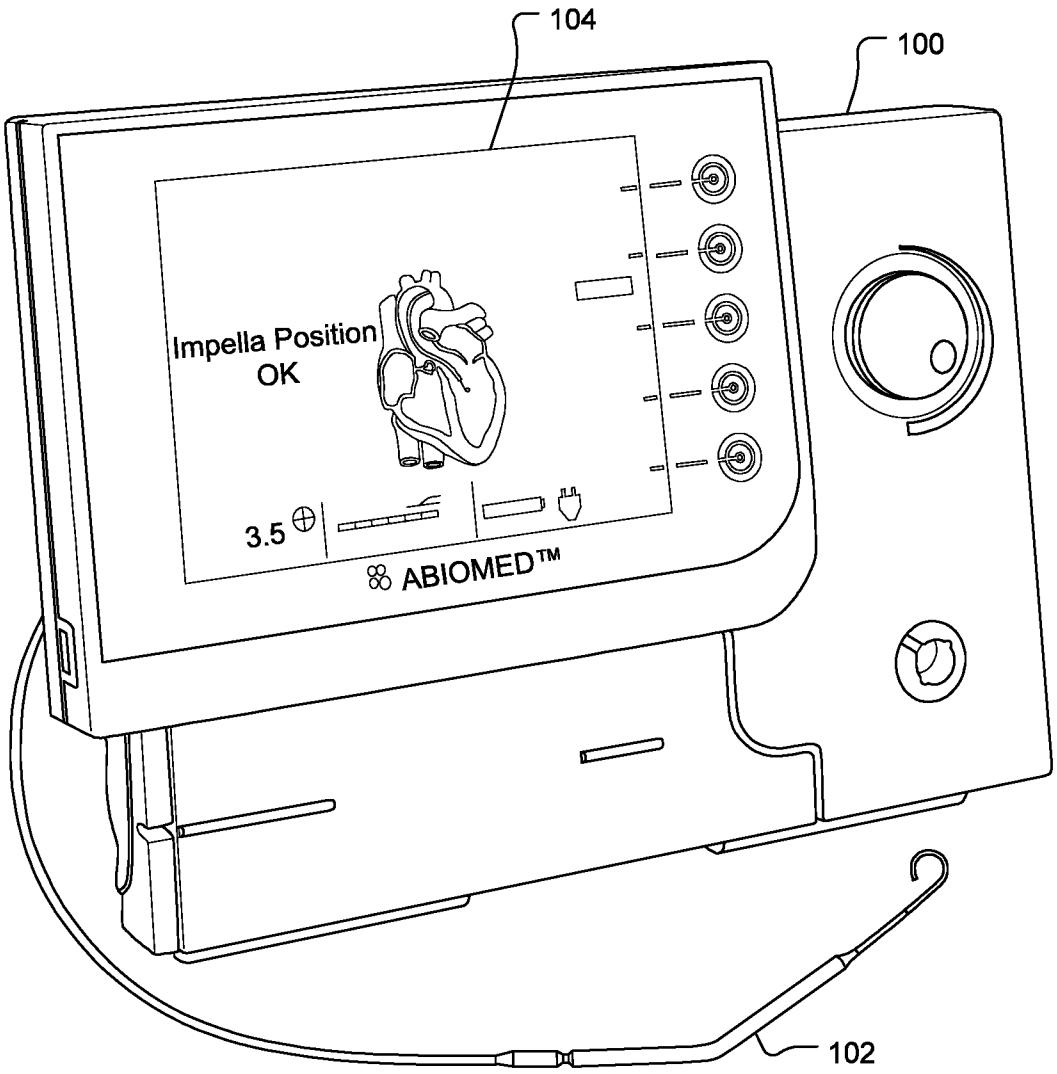

(Prior Art)
FIG. 1

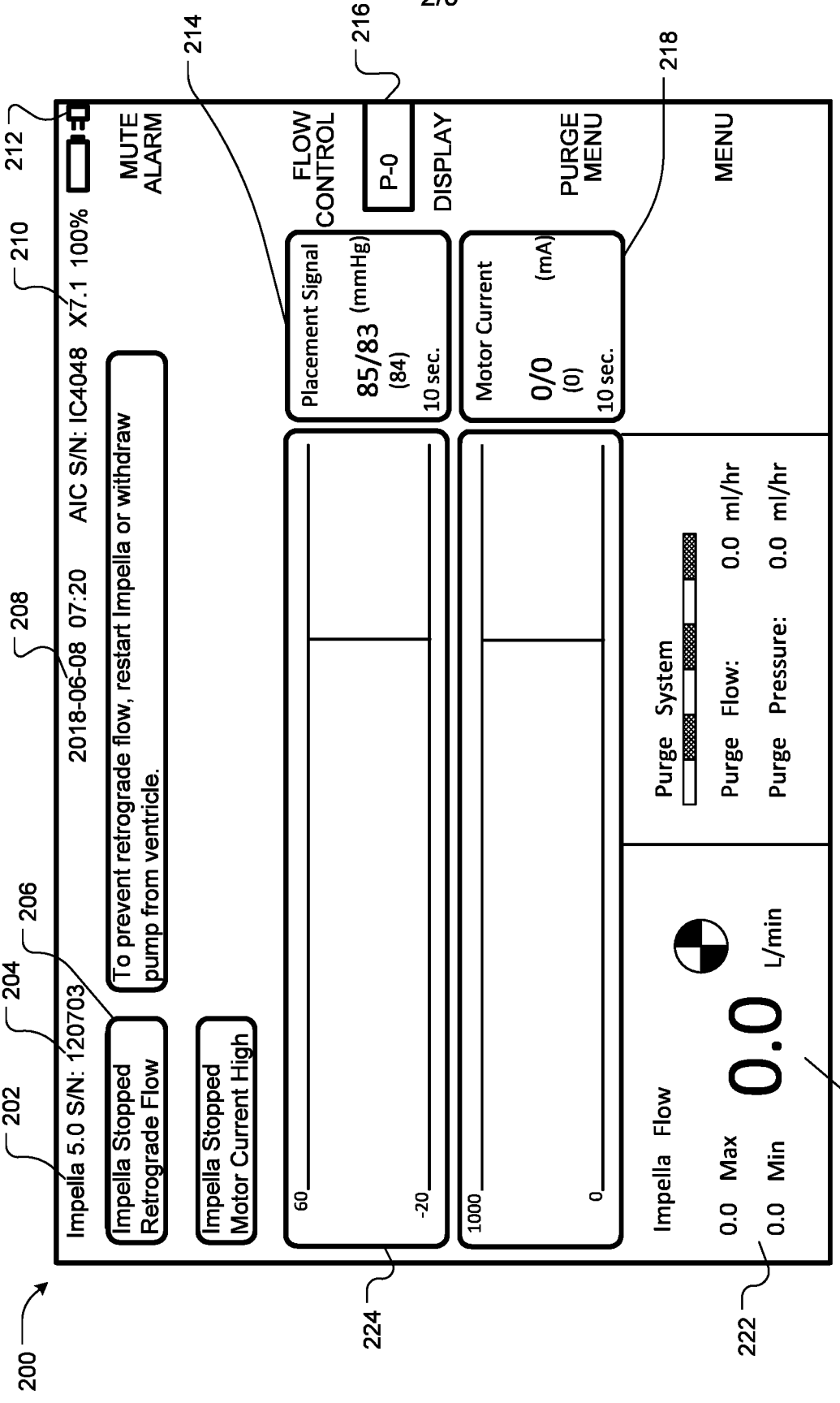

(Prior Art)
FIG. 2

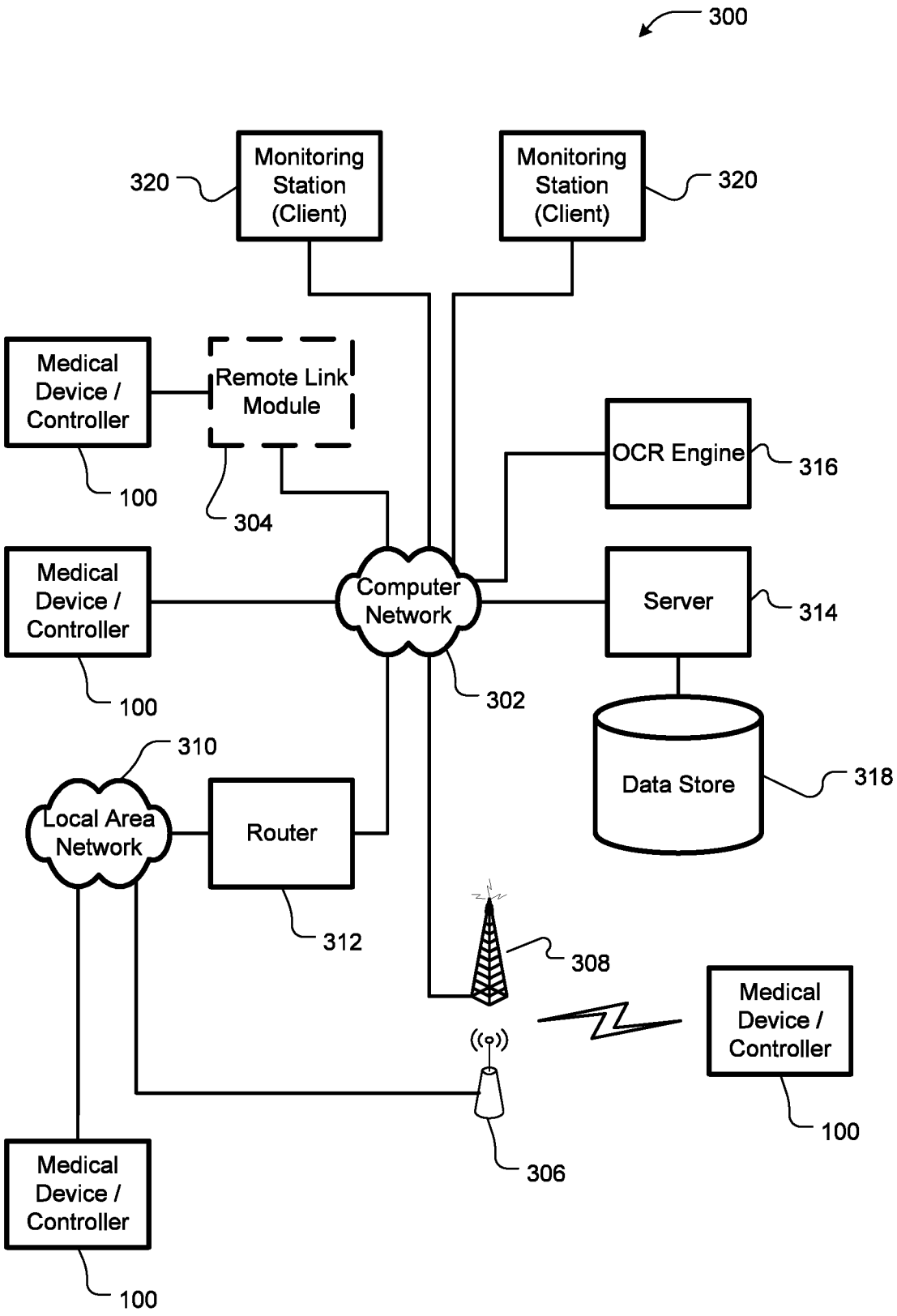
300
Monitoring Station (Client)
320
Monitoring Station (Client)
320
Medical Device / Controller
100
Remote Link Module
304
OCR Engine
316
Medical Device / Controller
100
Computer Network
302
Server
314
Data Store
318
310
Local Area Network
Router
312
308
Medical Device / Controller
100
306
Medical Device / Controller
100

FIG. 3

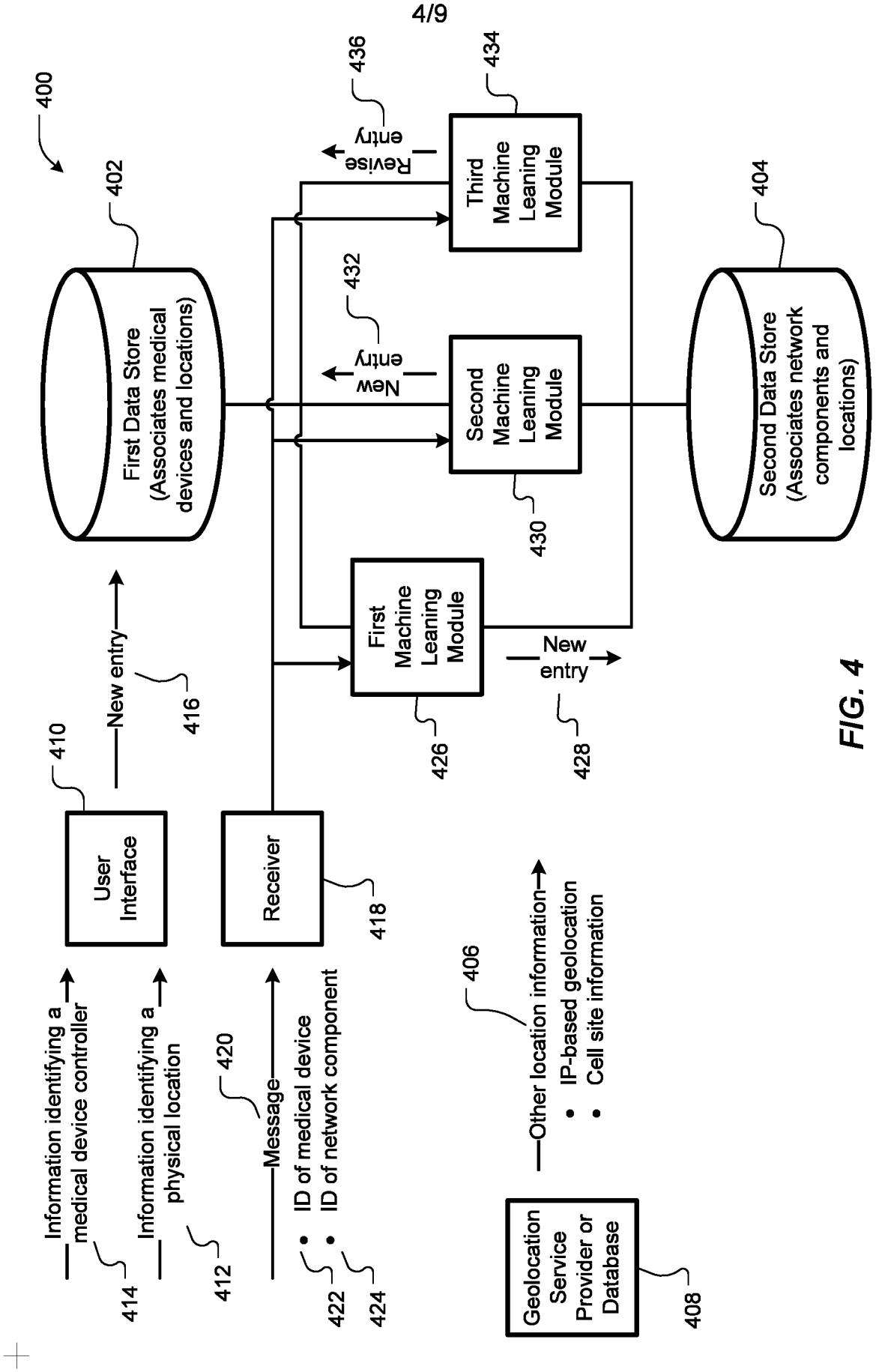
400
402
First Data Store (Associates medical devices and locations)
404
Second Data Store (Associates network components and locations)
410
User Interface
Information identifying a medical device controller
414
Information identifying a physical location
412
New entry
416
Receiver
418
Message
420
• ID of medical device
• ID of network component
422
424
First Machine Leaning Module
426
New entry
428
Second Machine Leaning Module
430
New entry
432
Third Machine Leaning Module
434
Revise entry
436
Other location information
406
• IP-based geolocation
• Cell site information
Geolocation Service Provider or Database
408

FIG. 4

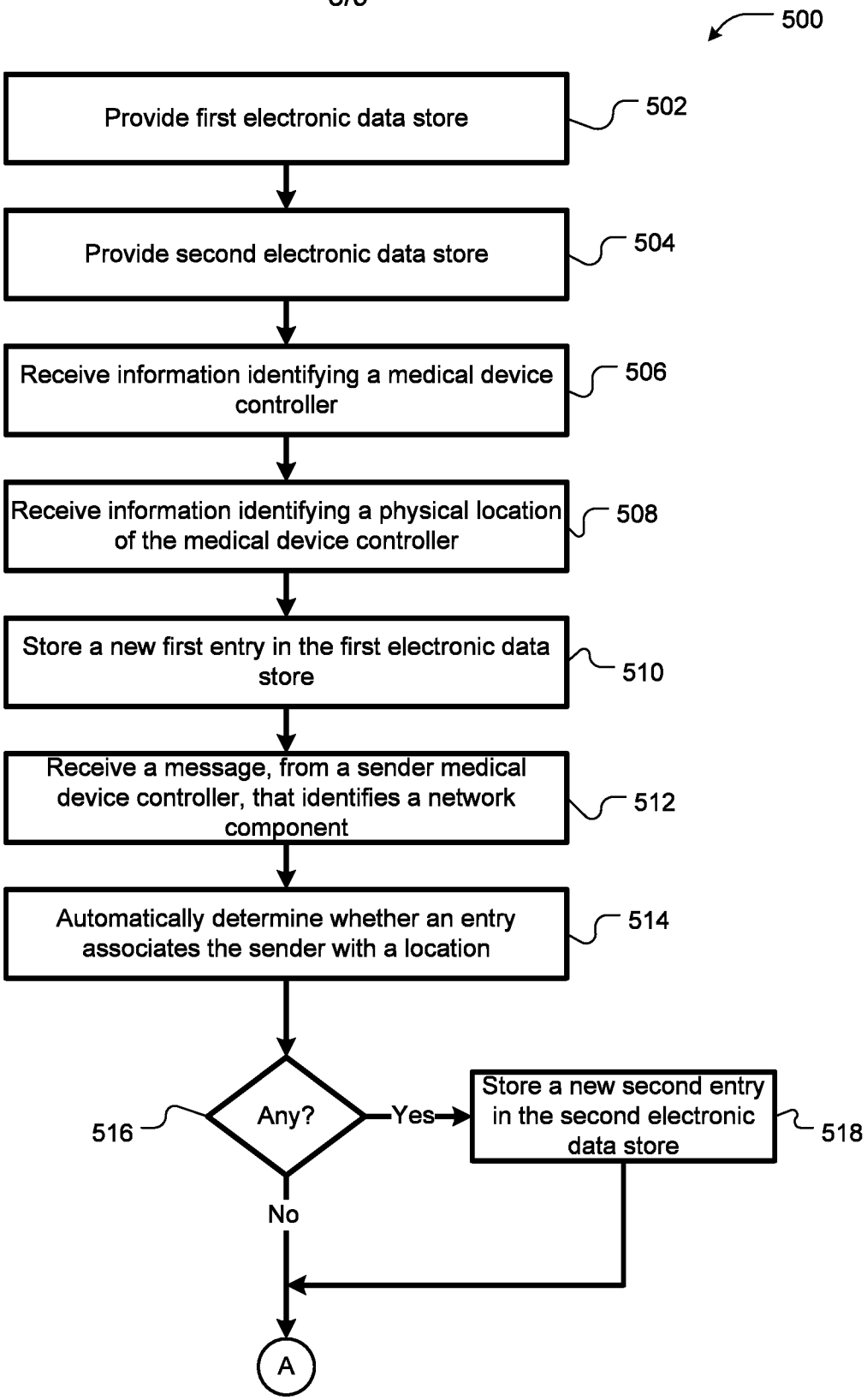
500
Provide first electronic data store
502
Provide second electronic data store
504
Receive information identifying a medical device controller
506
Receive information identifying a physical location of the medical device controller
508
Store a new first entry in the first electronic data store
510
Receive a message, from a sender medical device controller, that identifies a network component
512
Automatically determine whether an entry associates the sender with a location
514
Any?
516
Yes
Store a new second entry in the second electronic data store
518
No
A

FIG. 5A

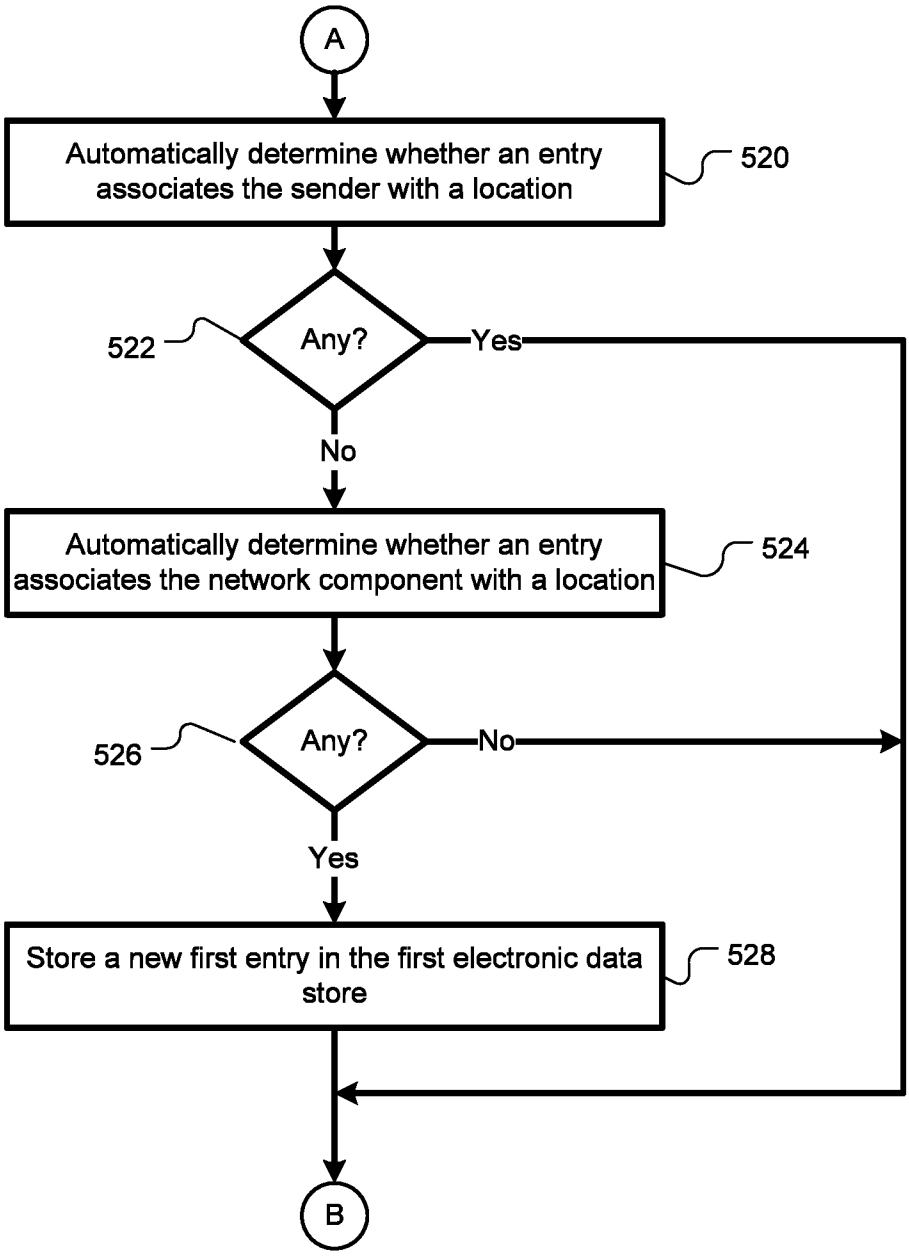
A
Automatically determine whether an entry associates the sender with a location
520
522
Any?
Yes
No
Automatically determine whether an entry associates the network component with a location
524
526
Any?
No
Yes
Store a new first entry in the first electronic data store
528
B

FIG. 5B

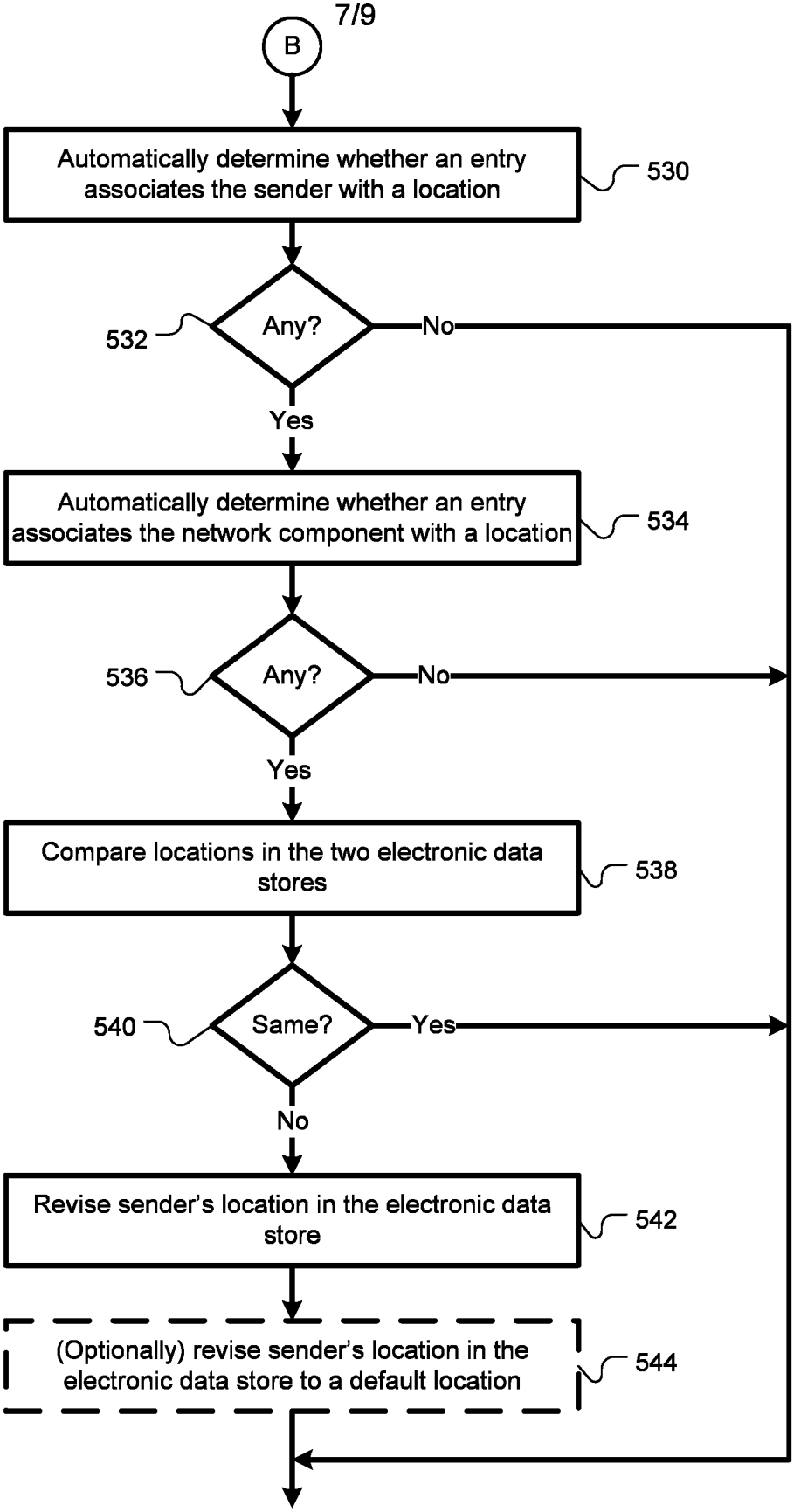
B
Automatically determine whether an entry associates the sender with a location
530
532
Any?
No
Yes
Automatically determine whether an entry associates the network component with a location
534
536
Any?
No
Yes
Compare locations in the two electronic data stores
538
540
Same?
Yes
No
Revise sender's location in the electronic data store
542
(Optionally) revise sender's location in the electronic data store to a default location
544

FIG. 5C

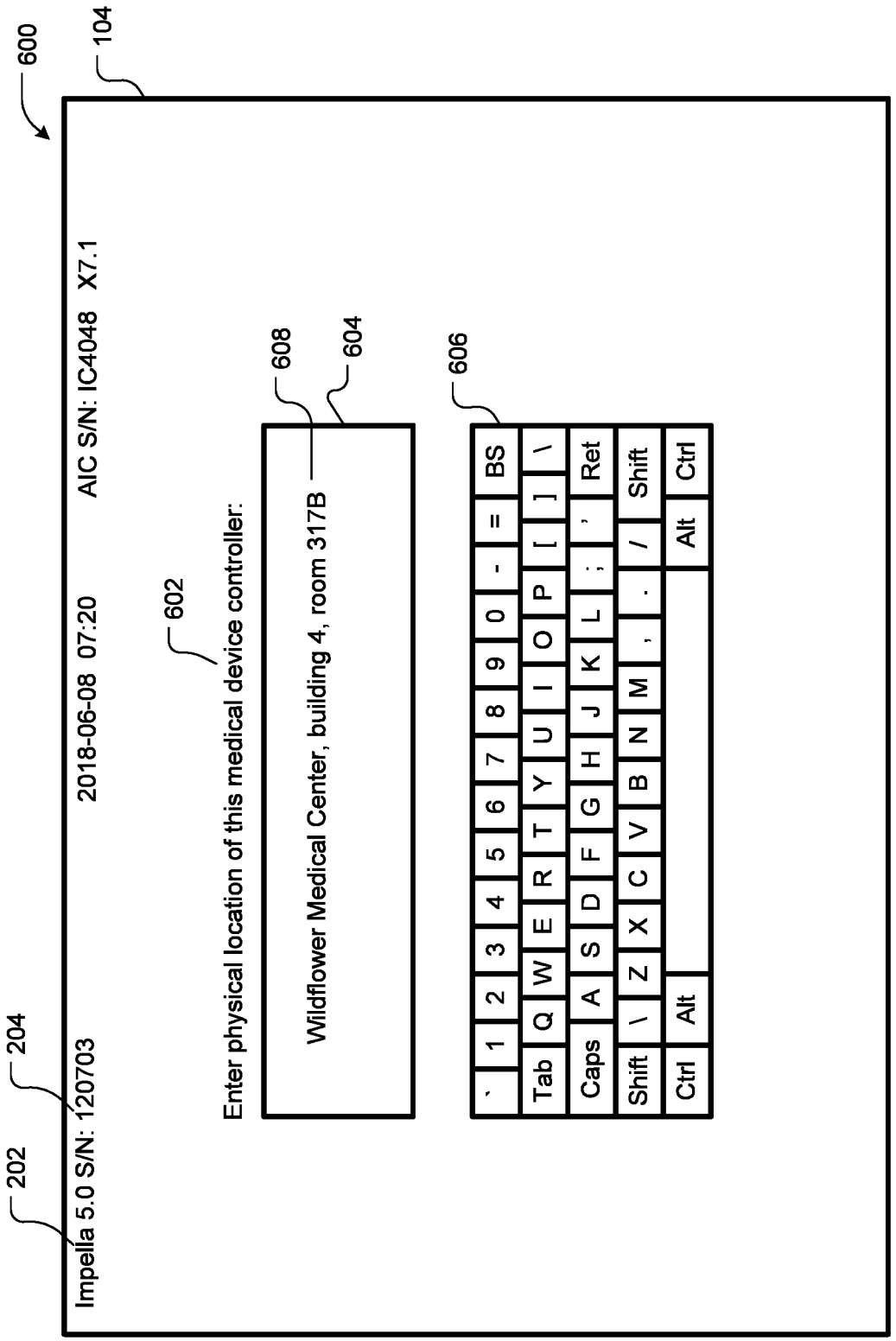
600
104
202
204
Impella 5.0 S/N: 120703
2018-06-08 07:20
AIC S/N: IC4048 X7.1
602
Enter physical location of this medical device controller:
608
604
Wildflower Medical Center, building 4, room 317B
606
` 1 2 3 4 5 6 7 8 9 0 - = BS
Tab Q W E R T Y U I O P [ ] \
Caps A S D F G H J K L ; ' Ret
Shift \ Z X C V B N M , . / Shift
Ctrl Alt Alt Ctrl

FIG. 6

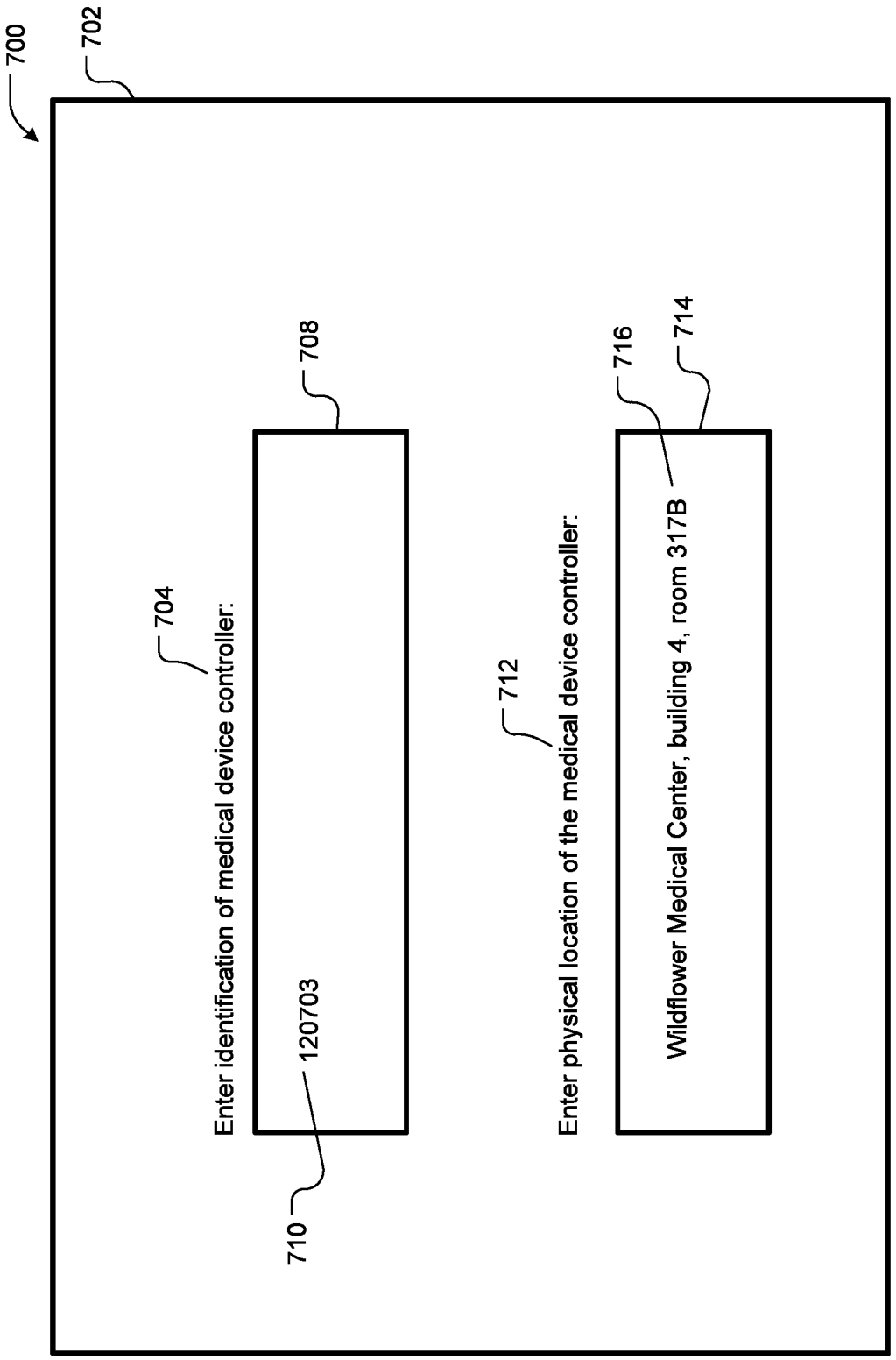
700
702
704
Enter identification of medical device controller:
708
120703
710
712
Enter physical location of the medical device controller:
716
714
Wildflower Medical Center, building 4, room 317B

FIG. 7