Dec. 24, 1935. H. P. COOPER 2,025,092

PRESSING IRON

Filed Dec. 1, 1933 2 Sheets-Sheet 1

Fig. 1

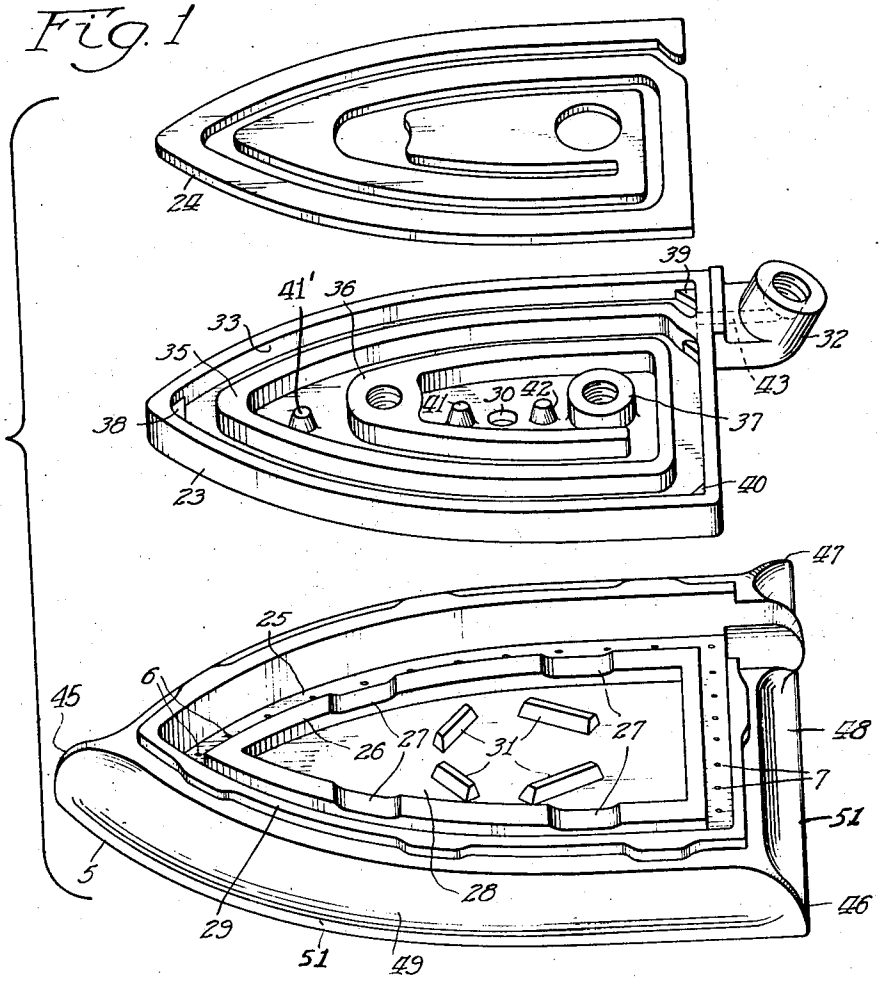

Inventor
Harry P. Cooper
By: Isabel & Wells Attys.

Dec. 24, 1935. H. P. COOPER 2,025,092

PRESSING IRON

Filed Dec. 1, 1933 2 Sheets-Sheet 2

Fig. 2

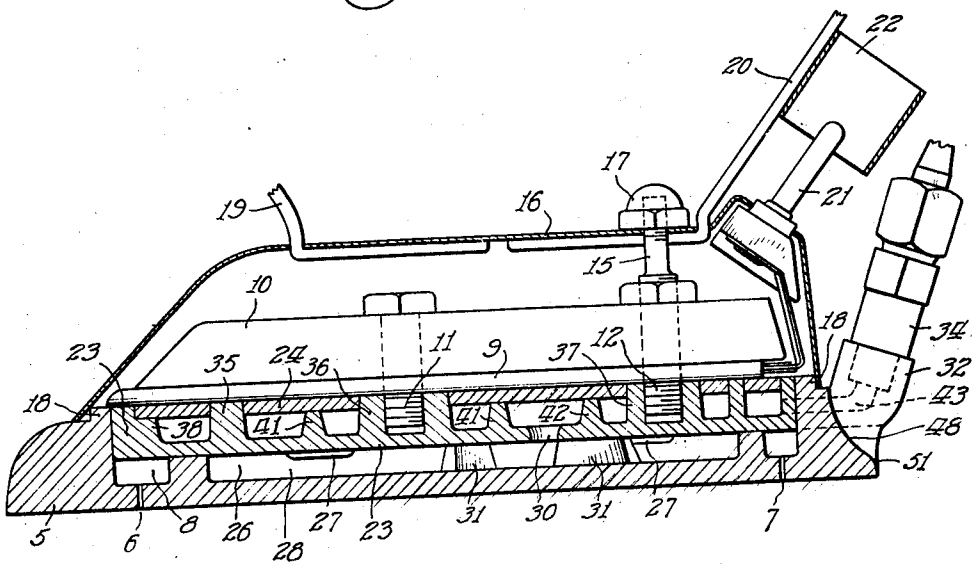

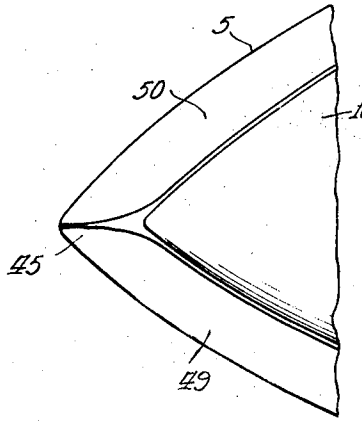

Fig. 3

Inventor
Harry P. Cooper
By: Isabel & Wells. Attys.

Patented Dec. 24, 1935

2,025,092

UNITED STATES PATENT OFFICE

2,025,092

PRESSING IRON

Harry P. Cooper, Chicago, Ill.

Application December 1, 1933, Serial No. 700,429

7 Claims. (Cl. 68—26)

My invention relates to pressing irons and particularly to an iron of this character which utilizes a source of steam supply in conjunction with an iron heated by electricity, gas, or other fuel, or which depends upon the steam alone for its heat.

The principal purpose of the invention is to provide in a device of this character a novel means for super-heating the steam from the iron heating element.

My invention contemplates also the provision of a novel conduit system for conducting the steam from the inlet over an elongated super-heating path and thence to a spreader and baffle before the steam is passed out through the face of the iron.

My invention contemplates also the provision, in a device of this character, of the above mentioned features while maintaining the steam conduit and spreading chambers completely isolated from the heating element so as to prevent all possibility of leakage. The construction is such also that the heating element may be readily replaced without disturbing the steam passage so as to cause any leakage.

It is a further purpose of my invention to provide in a pressing iron a novel construction of the corners and side edges of the iron which prevents tearing of the cloth and yet enables the operator to get the edge of the iron underneath buttons, pleats, and the like.

I will describe the preferred form of my invention by reference to the accompanying drawings wherein—

Fig. 1 is an exploded view of the iron base showing the three elements which go to form the steam passages separated so that the structure may be readily understood;

Fig. 2 is a longitudinal section through the iron taken on a vertical plane; and

Fig. 3 is a fragmentary plan view of the nose of the iron.

Referring now in detail to the drawings, a pressing iron of this type is made up of a base plate 5 which has suitable openings such as shown at 6 and 7 for the passage of steam from the steam duct or conduit 8 to the pressing face of the iron.

In this device the heating element which is a well known structure is shown at 9 as overlying the base portion of the iron and it is held down by the weight or plate 10 which is in turn clamped to the base portion by means of the bolts 11 and 12 which pass through a suitable slot running longitudinally of the heating element 9. This slot preferably is long enough so that both bolts pass through the same opening.

The bolt 12 has the reduced extension 15 upon which the housing 16 is secured by means of the nut 17 in a well known fashion. This housing 16 fits down over the shoulder 18 on top of the base 5 so as to enclose the heating element. The housing 16 also carries a suitable handle not shown which is mounted upon the upwardly extending portions 19 and 20 shown in Fig. 2.

The heating element terminals are carried out as illustrated at 21 and the handle portion 20 carries a suitable guard 22 through which the cord socket is passed to engage the terminals 21.

The above description outlines the general structure of the iron and I will now describe the base portion which provides the novel steam super-heating and spreading means.

Referring now to Fig. 1, the base is made up of the main base portion 5, an intermediate plate 23 and a closure plate 24. In the base 5 I provide the outer groove 25 into which the openings 6 and 7 reach, this outer groove being the actual distributing channel 8 through which the steam finally passes in being delivered to the openings 6 and 7.

Immediately inside the channel or groove 25, I provide the barrier or baffle wall 26 which is cut out as indicated at 27 to provide ports leading from the spreader chamber 28 to the distributing channel 25. The plate 23, the bottom of which is flat and completely closed except for the opening at 30 in the center thereof fits within the flange 29 which provides the shoulder 18 and rests flatly upon the top of the barrier 26. The opening 30 discharges the steam down into the chamber 28 substantially centrally of the space surrounded by the spreaders 31 (see Fig. 1).

Thus the steam passing through the opening 30 is spread outwardly in the chamber 28 and must rise over the baffle walls through the ports 27. The chamber 28 thus, in effect, forms both a central spreading chamber and a water trap for catching any water that may condense, for holding the water until the heat of the iron evaporates it. The plate 23 is sealed steam tight in position to the flange 29 as by welding, brazing, or otherwise. This plate 26 has the longitudinal tortuous groove 33 in the top thereof which groove leads from the inlet projection 32 to which the steam fixture 34 is connected around the plate 23 substantially twice before arriving at the opening 30. The barrier wall 35 is thickened at 36 to provide mounting for the bolt 11, and the

lug 37 provides a body for screwing the bolt 12 into.

Plate 24 fits into the groove 33 resting on the shelves such as 38, 39, and 40 and on the supporting pins 41, 41' and 42. This plate is then welded or sealed in position in any suitable manner so as to transform the groove 33 into an air or steam tight passage connected by the opening 43 to the steam inlet at 32. Plate 24 and the top surface of the outer rim of the grooved plate 23 as well as the top surface of the barrier 35 are all directly against the bottom of the heating element 9 so that the elongated passage formed in the plate 23 serves as a super-heating conduit for the steam introduced into the iron. This steam approaches the interior of the iron as it moves around the groove 33 and is heated up so that its maximum heat is reached so far as the super-heating conduit is concerned at the time it passes through the opening 30.

It is believed to be evident from the foregoing description that I have provided a novel base structure which effects a super-heating of the steam without any danger whatsoever of leakage back to the heating element. It is also evident that the distribution and trapping features will further insure a delivery of dry steam through the openings 6 and 7 to the face of the iron with substantially uniform pressure. Another feature of this iron is found in the base 5 in the shaping of the edges and corners.

Referring to Figs. 1 and 2, it will be noted that the three corners of the base are convex in contour as indicated at 45, 46 and 47. These corners rise rather abruptly, in fact almost at right angles from the pressing face of the iron so as to prevent their sticking under wrinkles in the material and tearing the material. Immediately back from the corners however, the side edges of the base plate 5 are curved inwardly to provide concave surfaces 48, 49 and 50 joining the lower edge by means of a convex portion 51 of very short radius so that the side edges of the iron may be passed underneath buttons, pleats and the like and thus more completely finish the pressing of the garments.

From the above description it is believed that the construction and advantages of this device will be cleared to those skilled in this art. It is also believed to be obvious that various modifications may be made from the exact details shown and described without departing from the scope of the invention as set forth in the objects and defined in the claims.

Having thus described one specific form of my invention what I claim as new and desire to secure by Letters Patent is:

1. In a pressing iron, a heating unit, a heat conducting wall on which said unit is mounted for imparting heat to said wall, a second heat conducting wall spaced below the first wall, said walls being connected by heat conducting partitions and walls providing in the space therebetween a tortuous steam passage, a base sealed to said second wall and having a chamber beneath said second wall communicating with one end of said passage, said passage having a steam inlet opening, and said base having apertures leading from said chamber to the bottom face thereof, and a baffle wall interposed between said chamber and said apertures.

2. A base plate for pressing irons, said base plate having in the top thereof an outer channel provided with apertures leading to the pressing face, and an inner recess separated from said channel by a barrier, said barrier having depressions therein providing steam passages from the recesses to the chamber, and a steam conduit overlying said channel and recess and opening into said recess, the conduit being sealed steam tight to said base to enclose the channel and recess, said steam conduit comprising a plate-like member having an elongated tortuous passage therein.

3. In a pressing iron, a heating unit, a heat transmitting member beneath said unit having a steam inlet and having therein an elongated passage leading from said inlet spirally inward toward the center of the member, said heat transmitting member having a downwardly directed outlet from said passage, a base plate having a channel in the top thereof adjacent the side edges of the base plate, said base plate having apertures leading from the channel to the lower surface thereof, said heat transmitting member being sealed to the top of the base plate, and the top of the base plate having a recess in the top thereof beneath the heat transmitting member, said recess extending from the outlet in the heat transmitting member to said channel to thereby provide a passage for directing steam from said outlet outwardly into said channel.

4. In a pressing iron, a base plate, a heat transmitting member thereon, and a heating unit on said heat transmitting member, said heat transmitting member having a steam inlet at one side and being provided with an elongated passage therein extending over a tortuous path from said inlet to a downwardly directed outlet, said base plate and heat transmitting member being sealed together along the periphery of the heat transmitting member, and having a spreading chamber therebetween into which said outlet is directed, said base plate having apertures leading from its lower surface to a channel provided on the upper side thereof, said channel being in communication with the spreading chamber.

5. In a pressing iron, a base plate, a heat transmitting member thereon, and a heating unit on said heat transmitting member, said superheater having a steam inlet at one side and being provided with an elongated passage therein extending over a tortuous path from said inlet to a downwardly directed outlet, said base plate having apertures therethrough from the lower surface to the upper surface, and said base plate and said heat transmitting member forming a passageway therebetween connecting said outlet with said apertures, said base plate having a channel in the upper surface thereof forming part of said last named passageway, said apertures terminating in said channel.

6. In a pressing iron, a base plate having on the top thereof a flange adjacent the periphery thereof and having a channel just inside said flange, said plate having apertures leading from said channel to the lower surface thereof, a heat transmitting unit mounted on said base plate and fitting inside said flange, said unit having a steam inlet and an elongated tortuous passage therethrough which passage terminates in a downwardly directed outlet adjacent the center of said unit, said base plate and unit forming a chamber therebetween with which said outlet and said channel communicate.

7. In a pressing iron, a base plate having on the top thereof a flange adjacent the periphery thereof and having a channel just inside said flange, said plate having apertures leading from said channel to the lower surface thereof, a heat

transmitting unit mounted on said base plate and fitting inside said flange, said unit having a steam inlet and an elongated tortuous passage therethrough which passage terminates in a downwardly directed outlet adjacent the center of said unit, said base plate and unit forming a chamber therebetween with which said outlet and said channel communicate, said base plate having depressions in a wall forming the inner side wall of said channel for directing the steam into said channel.

HARRY P. COOPER.