US00D376590S

United States Patent [19]

Kao et al.

[11] Patent Number: Des. 376,590

[45] Date of Patent: **Dec. 17, 1996

[54] **MONITOR ARM**

[76] Inventors: **Spencer Kao**, P.O. Box 18-147, Taipei, Taiwan; **Maria J. Kozo**, 2649 Druid Hill Dr.; **Jack L. Moore**, 3532 Peppermint Hills Dr., both of, Maryville, Tenn. 37804

[**] Term: **14 Years**

[21] Appl. No.: **38,681**

[22] Filed: **May 10, 1995**

[52] **U.S. Cl.** **D14/114**

[58] **Field of Search** D14/114, 251; D8/380, 355, 373; D6/418, 511, 509, 449, 491, 445, 396, 495; 248/278, 282, 281.1, 297.1, 425, 283, 118.3, 183, 425, 454, 456, 917–924, 346; 108/1, 6, 95–99, 144; 211/13, 42, 70.1, 135; D19/88

[56] **References Cited**

U.S. PATENT DOCUMENTS

D. 227,069	6/1973	Webb	D6/418
D. 311,829	11/1990	Vossoughi	D6/418
D. 314,505	2/1991	Chen	D8/380
D. 325,868	5/1992	Bartok	D8/380
D. 342,173	12/1993	Kirchner et al.	D6/511
D. 363,065	10/1995	Karten et al.	D14/114
3,820,752	6/1974	Oram	248/278
4,562,987	1/1986	Leeds et al.	248/278
4,672,898	6/1987	Davidson	D6/511 X
4,687,167	8/1987	Skalka et al.	248/282
4,695,024	9/1987	Haven	248/281.1
4,854,538	8/1989	Von Schalscha	D6/511 X
4,974,808	12/1990	Ball	248/917
5,074,501	12/1991	Holtta	248/118.3
5,123,621	6/1992	Gates	248/281.1

OTHER PUBLICATIONS

Magazine ad, Monitor arm; Anthro Technology Furniture, 3221 N.W. Yeon Street, Portland, Oregon 97210. Publication date Mar. 13, 1989.

Catalog page, Monitor arms; Curtis Manufacturing Company, Inc., 30 Fitzgerald Drive, Jaffrey, New Hampshire 03452–1931. Publication date 1993.

P. 128, Monitor arms; Misco, One Misco Plaza, Holmdel, New Jersey 07733. Publication date Spring. 1993.

Catalog page, Monitor arm; Misco, One Misco Plaza, Holmdel, New Jersey 07733. Publication date Spring 1993.

Pp. 80 and 81; Monitor arms; Global Computer Supplies, 2318 East Del Amo Boulevard, Dept. 34, Compton, California 90220. Publication date Oct. 1992.

Pp. 6, 7, 9 and 10, Monitor arms; MicroComputer Accessories, Inc., 5405 Jandy Place, P.O. Box 66911, Los Angeles, California 90066. Publication date 1993.

Primary Examiner—Freda Nunn

[57] **CLAIM**

The ornamental design for a monitor arm, as shown and described.

DESCRIPTION

Fig. **1** is a top right front perspective view of a monitor arm showing our new design the broken lines are for illustrative purposes only and form no part of the claimed design;

FIG. **2** is a top plan view thereof;

FIG. **3** is a front elevational view thereof;

FIG. **4** is a rear elevational view thereof;

FIG. **5** is a right side elevational view thereof, the left side elevational view being a mirror image; and,

FIG. **6** is a bottom plan view thereof.

1 Claim, 3 Drawing Sheets

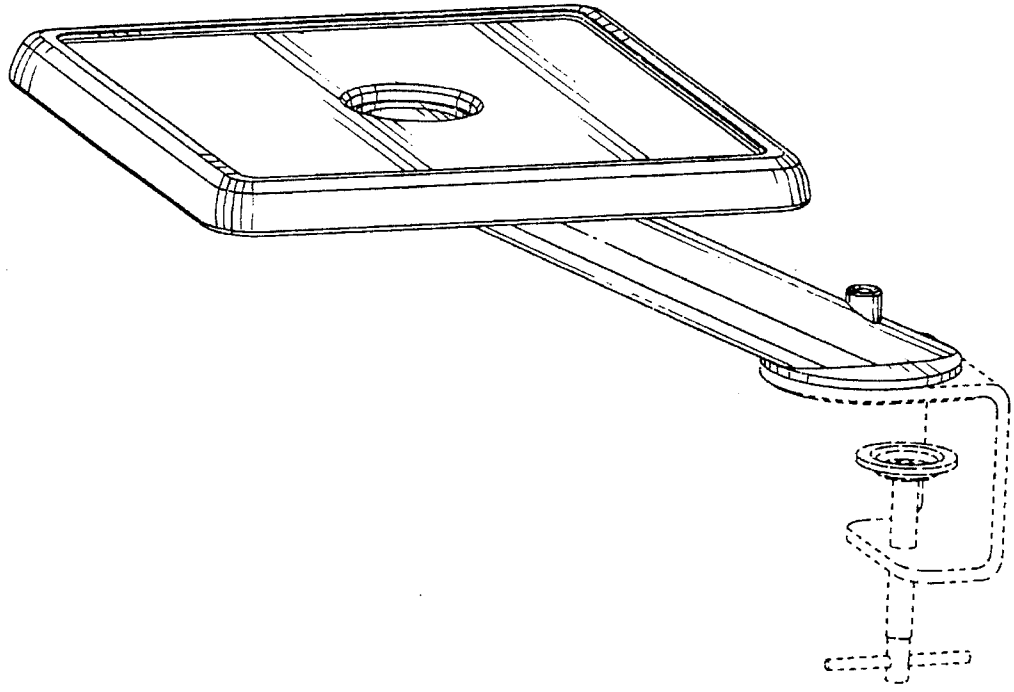

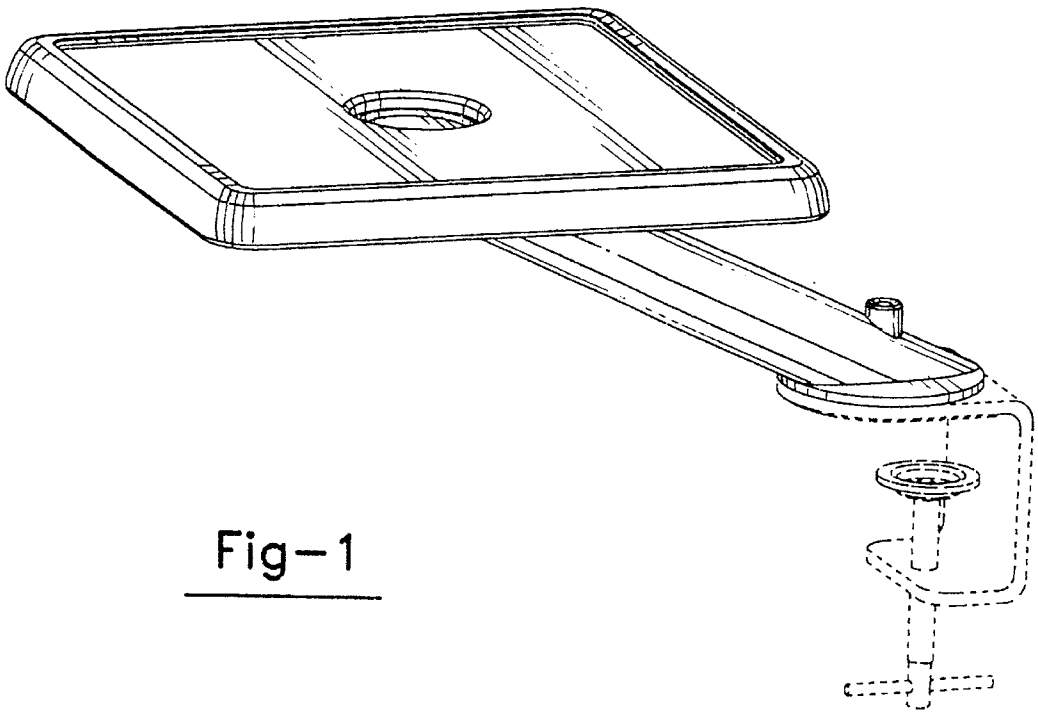

Fig–1

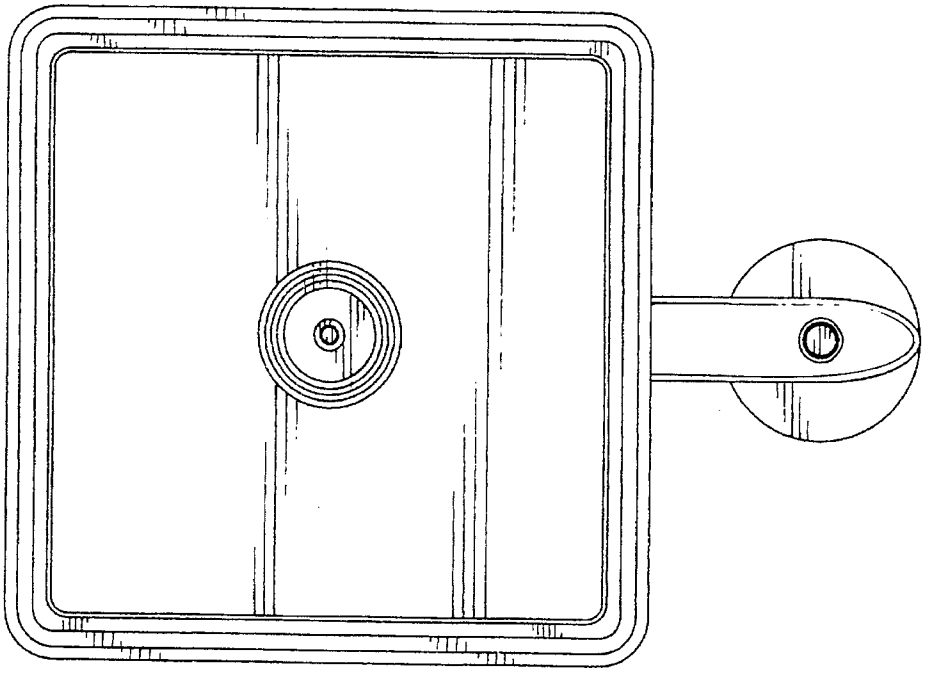

Fig–2

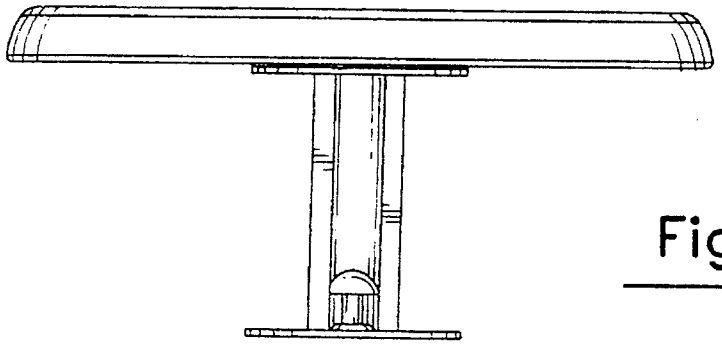

Fig–3

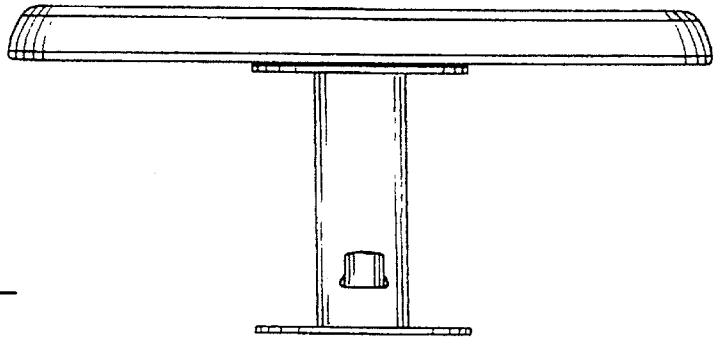

Fig–4

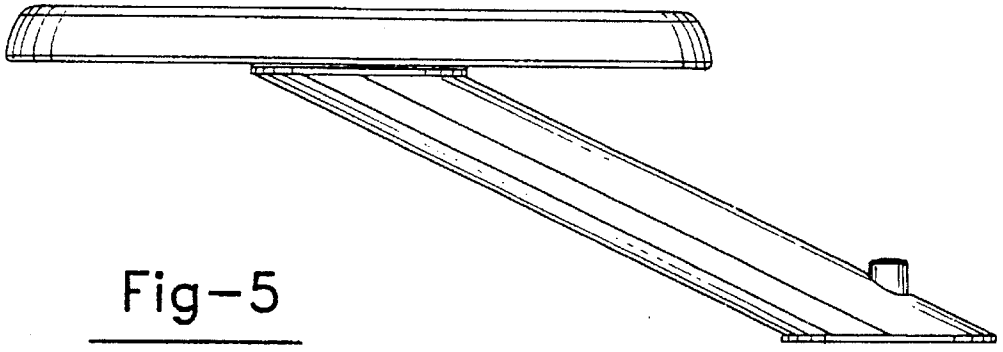

Fig–5

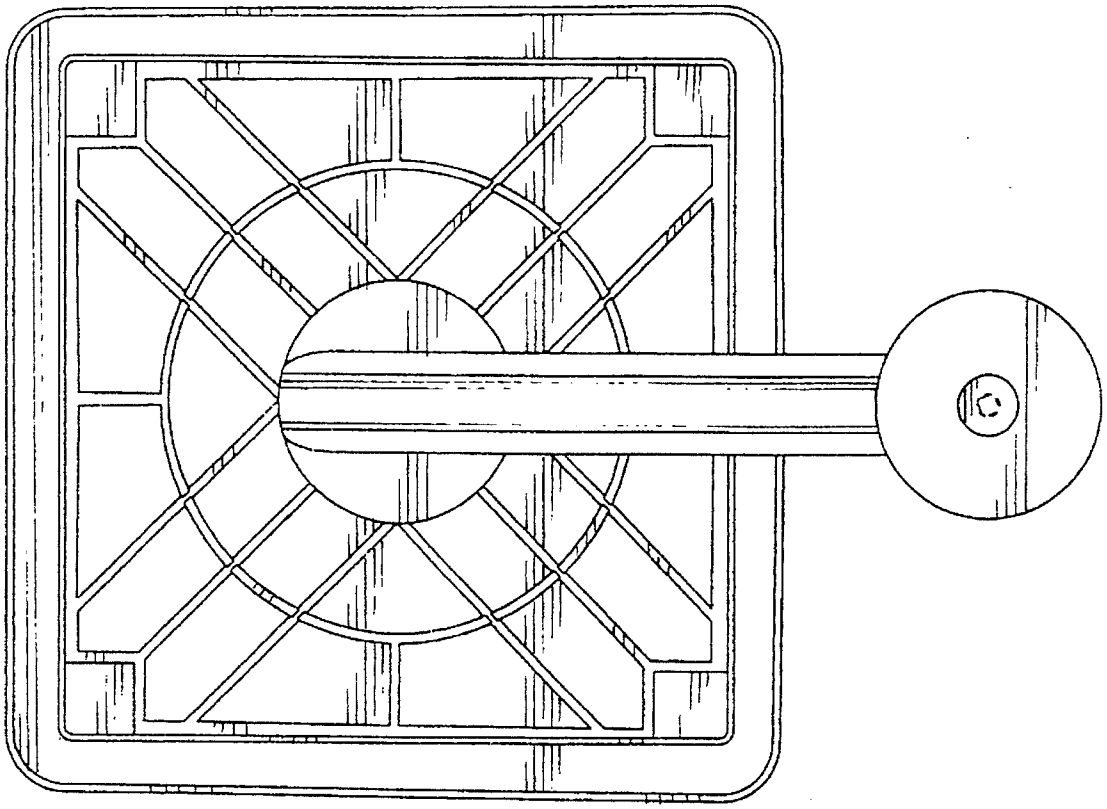

Fig-6